Jonsered®

IPL, FR2213 RA, 966773301, 2012

FR2213 RA

Spare parts
Ersatzteile
Pièces détachées
Reserve onderdelen
Repuestos
Reservdelar

GPL®

A FR2213 RA SEAT, TS2500

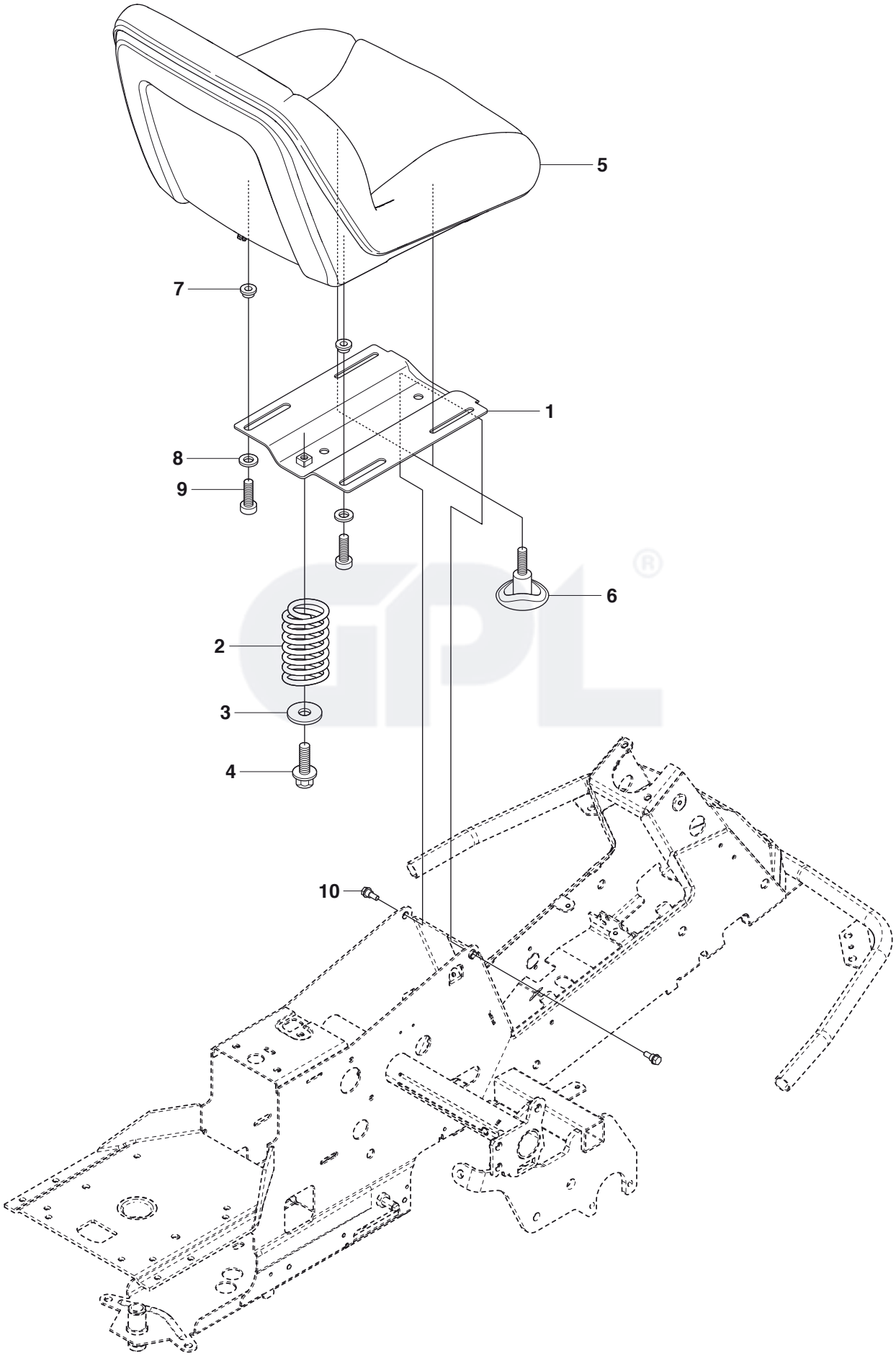

Page A **FR2213 RA** **SEAT**

Position	Article	Quantity	Notes	Kit
1	573 99 50-04	1		
2	506 91 53-01	1		
3	734 11 74-41	1		
4	725 24 93-71	1		
5	502 60 97-01	1		
6	506 56 55-01	2		
7	506 56 53-01	2		
8	734 11 64-41	2		
9	506 55 63-01	2		
10	506 59 74-01	2		

B FR2213 RA
FUEL SYSTEM

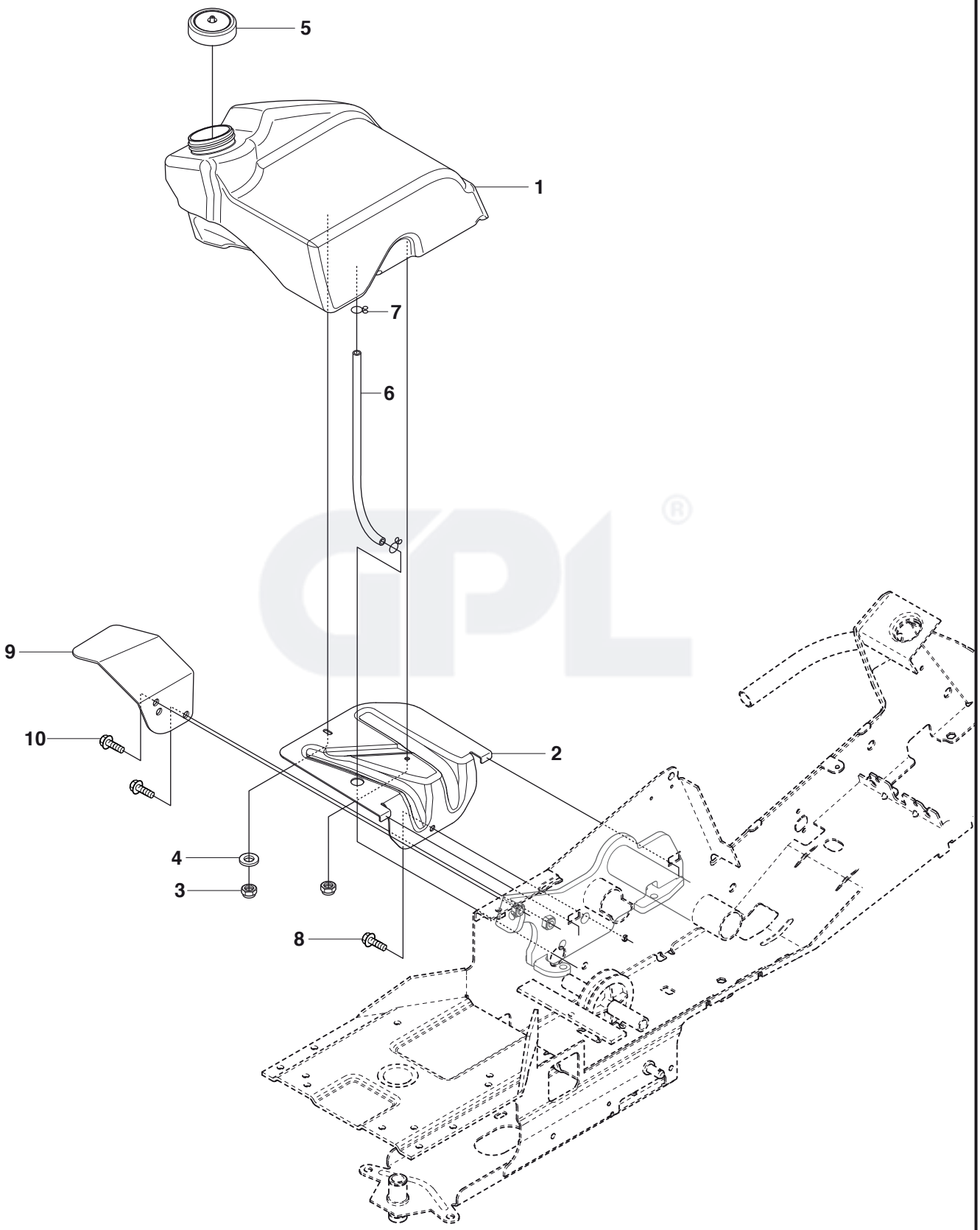

Page B **FR2213 RA** **FUEL SYSTEM**

Position	Article	Quantity	Notes	Kit
1	504 05 99-01	1		
2	544 32 93-01	1		
3	732 21 16-01	2		
4	734 11 56-01	1		
5	506 67 33-01	1		
6	504 80 00-07	1		
7	535 46 97-01	2		
8	725 23 64-61	1		
9	504 55 66-01	1		
10	725 24 93-71	2		

GPL®

C1 FR2213 RA COVER

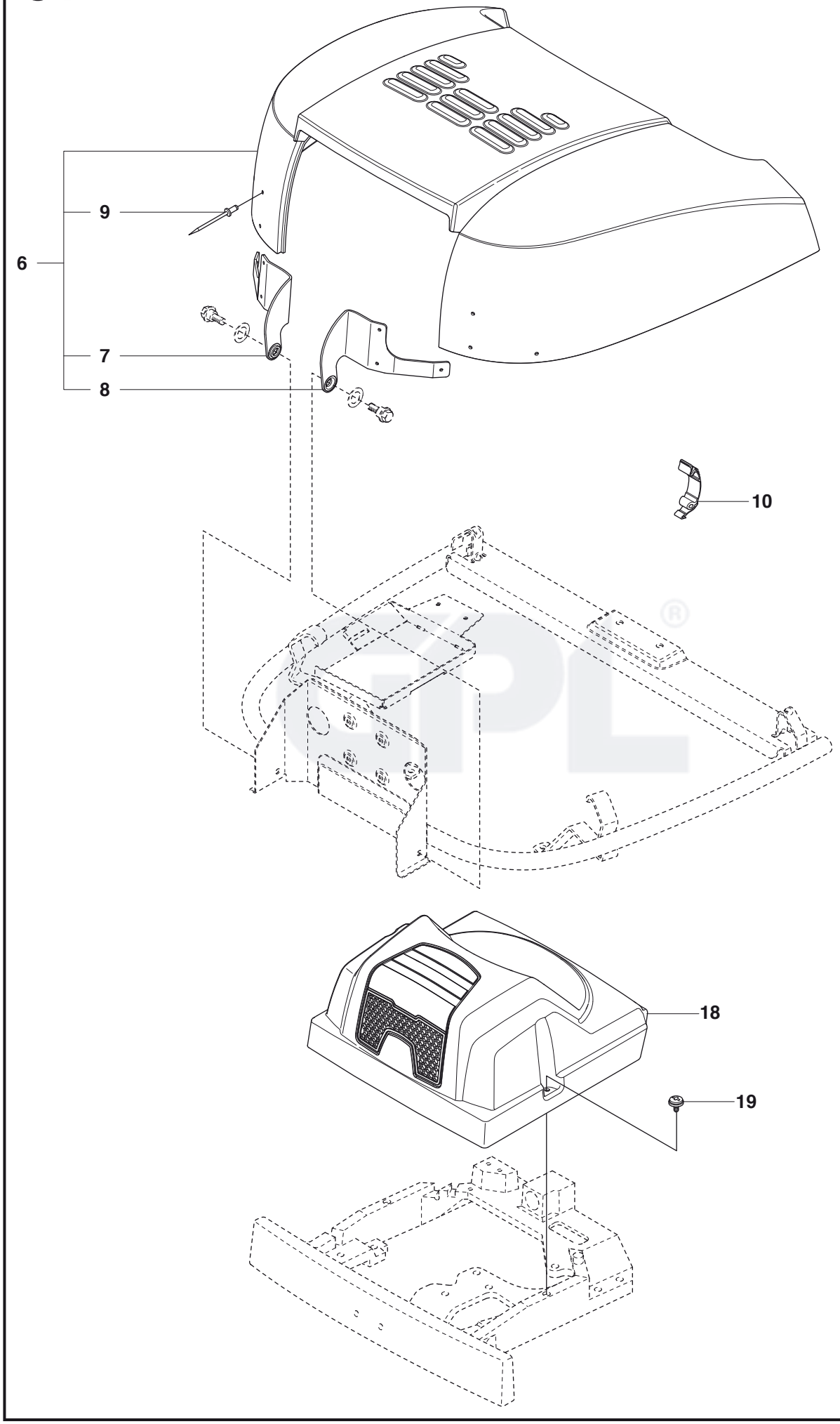

C2 FR2213 RA COVER

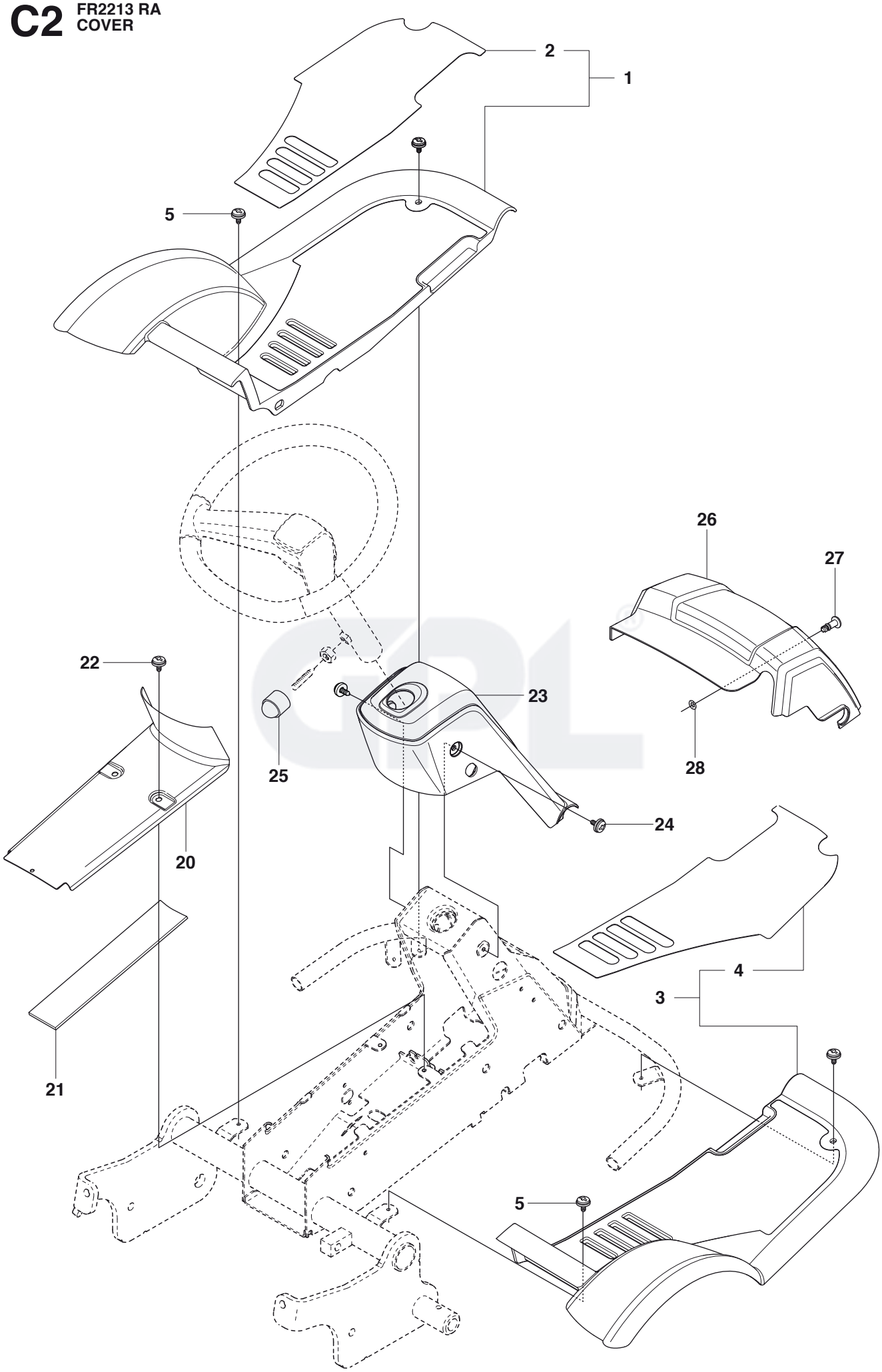

C3 FR2213 RA COVER

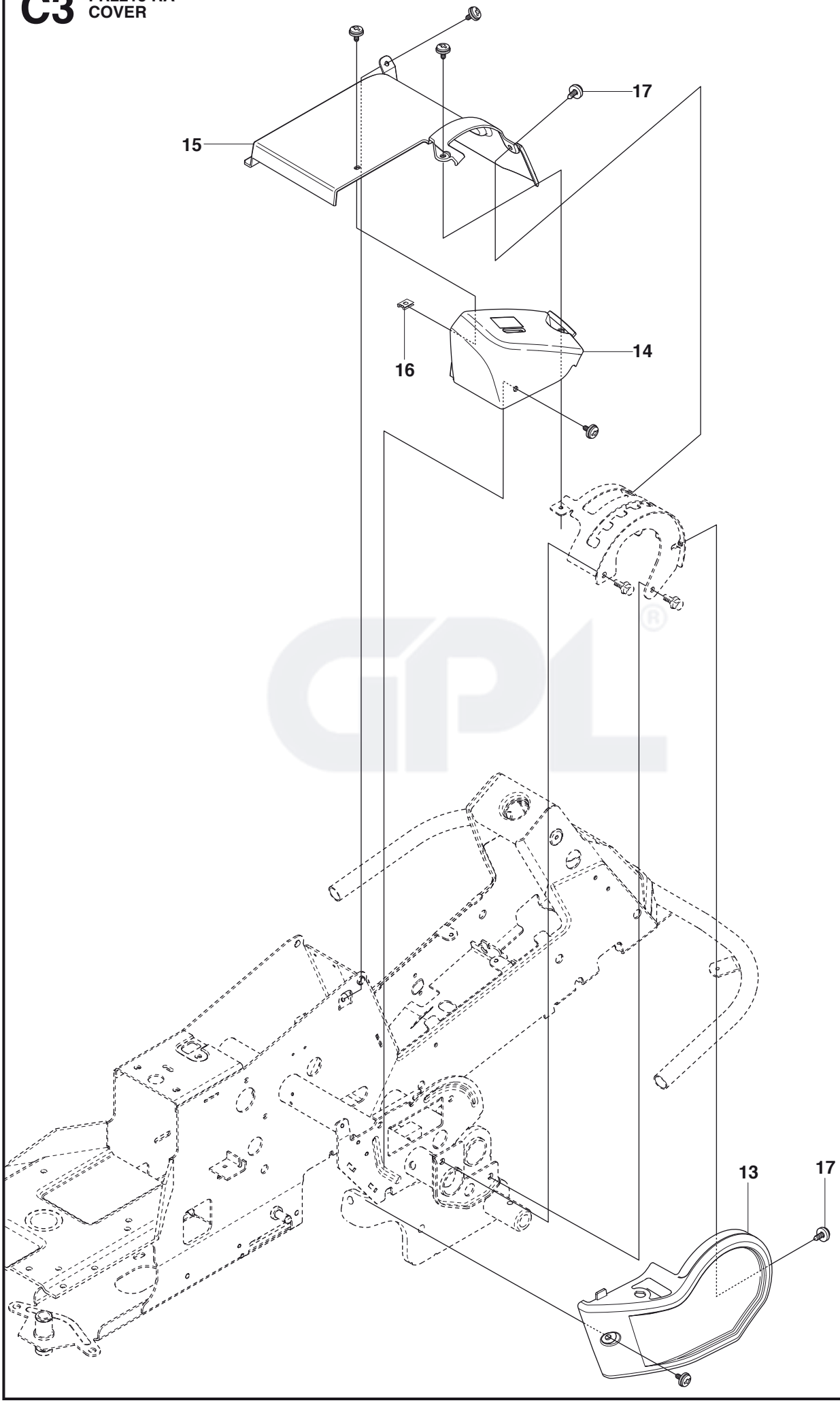

Page C **FR2213 RA** **COVER**

Position	Article	Quantity	Notes	Kit
1	504 05 92-01	1		
2	504 06 02-01	1		1
3	502 29 07-03	1		
4	504 06 02-03	1		3
5	544 40 05-01	4		
6	535 41 90-04	1		
7	535 41 99-01	1		6
8	535 41 99-02	1		6
9	722 79 54-02	6		6
10	503 89 47-02	1		
13	504 05 95-01	1		
14	504 05 97-02	1		
15	504 05 98-02	1		
16	535 42 91-01	1		
17	544 40 05-01	7		
18	574 85 61-02	1		
19	544 40 05-01	2		
20	544 23 92-02	1		
21	544 42 75-01	1		
22	544 40 05-01	2		
23	504 06 01-01	1		
24	544 40 05-01	2		
25	544 43 32-02	1		
26	544 37 42-02	1		
27	525 39 06-01	1		
28	506 96 36-01	1		

D FR2213 RA
HEIGHT ADJUSTMENT

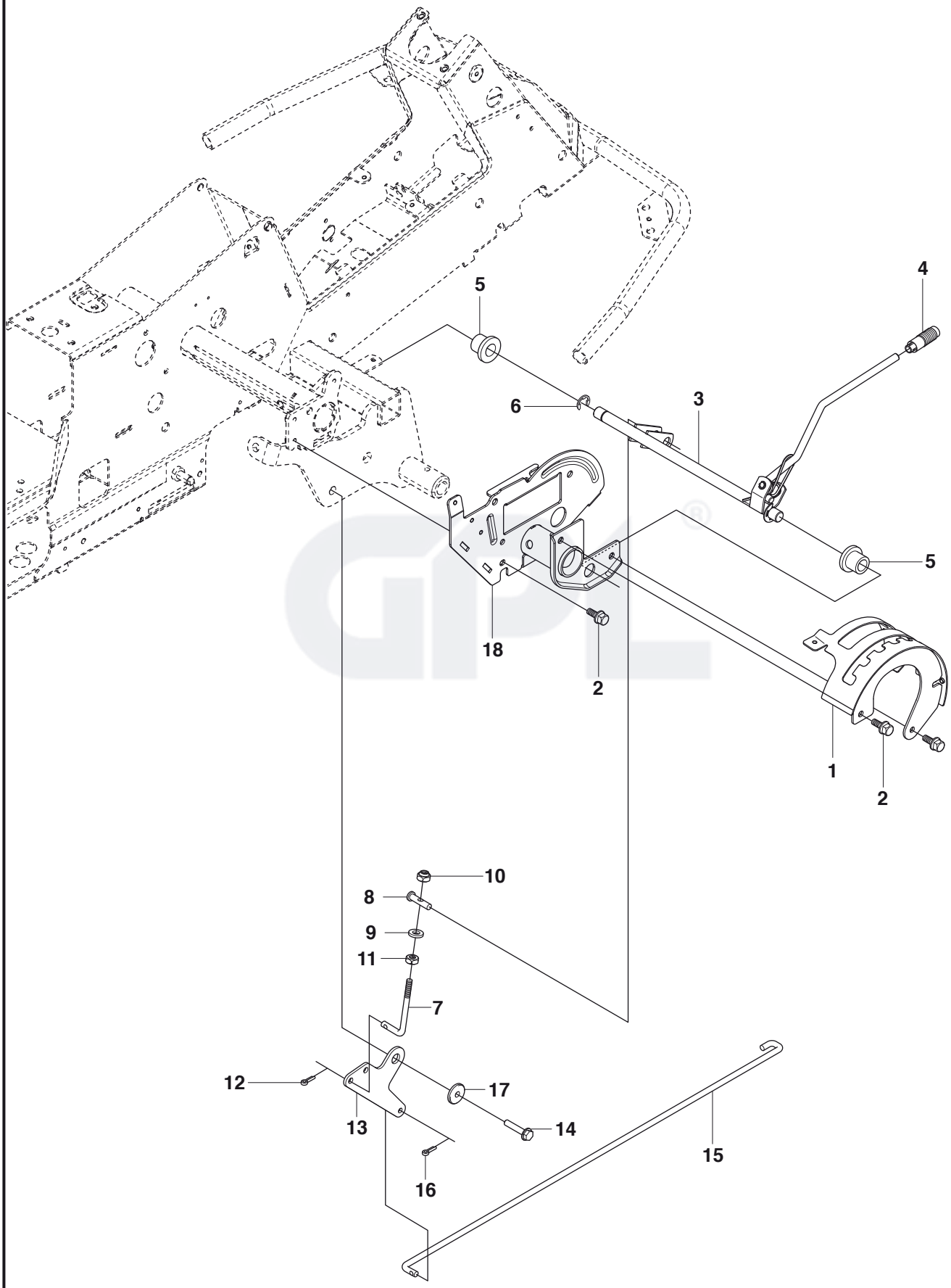

Page D **FR2213 RA** **HEIGHT ADJUSTMENT**

Position	Article	Quantity	Notes	Kit
1	535 50 14-02	1		
2	506 57 01-03	4		
3	504 73 45-01	1		
4	506 54 20-01	1		
5	506 55 43-01	2		
6	735 31 22-20	1		
7	506 90 82-01	1		
8	506 78 46-01	1		
9	734 11 72-01	1		
10	732 21 18-01	1		
11	731 23 18-01	1		
12	721 61 83-01	1		
13	578 04 07 01	1		
14	506 57 01-05	1		
15	544 22 70-01	1		
16	721 61 83-01	1		
17	506 91 87-02	1		
18	578 15 56-02	1		

E FR2213 RA MOWER LIFT

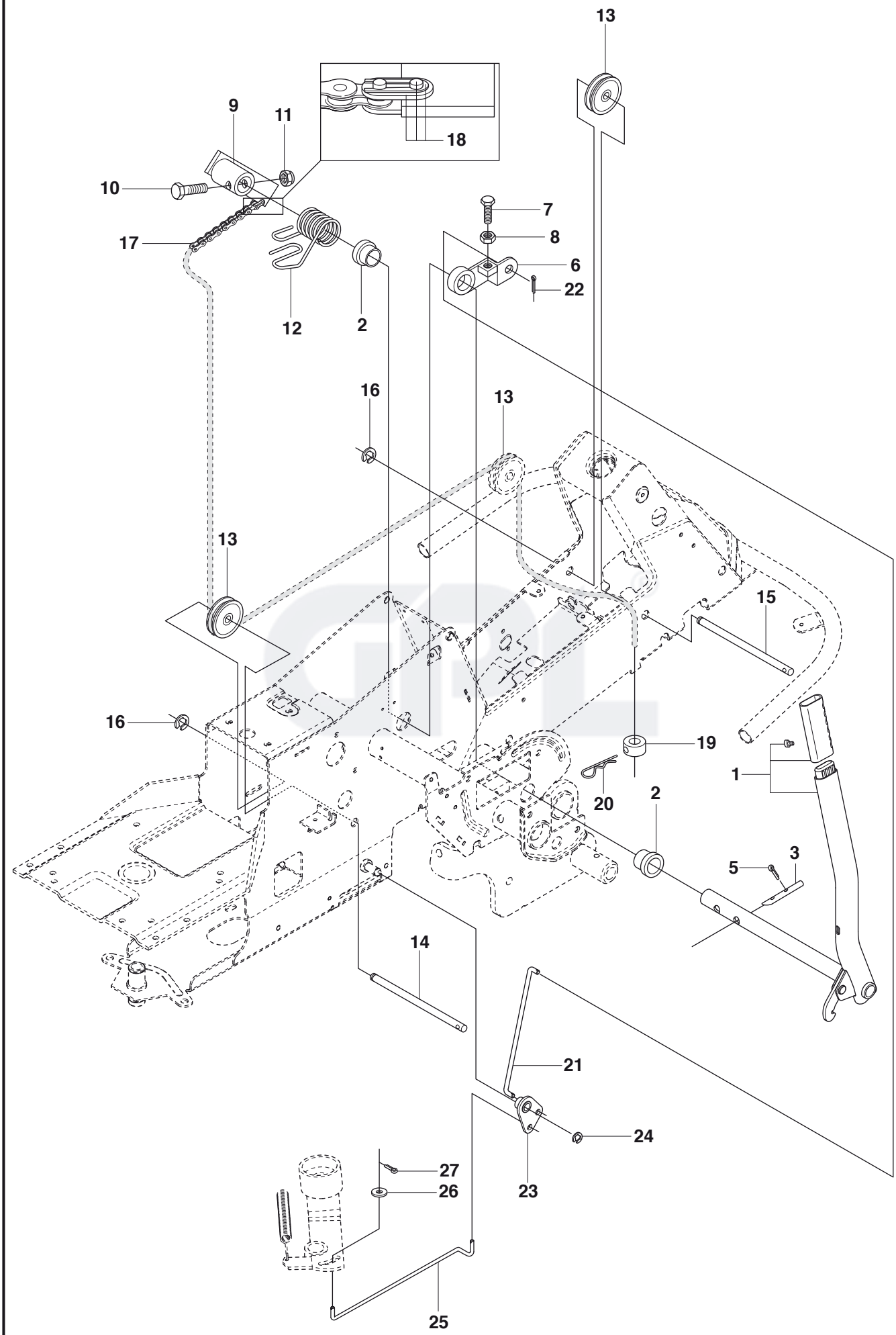

Page E **FR2213 RA** **MOWER LIFT**

Position	Article	Quantity	Notes	Kit
1	501 01 86-01	1		
2	506 55 65-01	2		
3	525 40 66-01	1		
5	721 61 83-01	1		
6	506 78 43-01	1		
7	725 24 97-51	1		
8	731 23 20-51	1		
9	544 43 36-01	1		
10	725 25 42-51	1		
11	732 25 22-01	1		
12	506 91 68-01	1		
13	506 90 56-01	2		
14	506 90 57-01	1		
15	506 90 57-02	1		
16	735 31 18-20	2		
17	506 55 46-07	1		
18	506 55 47-01	1		
19	544 93 42-01	1		
20	506 96 66-01	1		
21	544 45 69-01	1		
22	721 61 83-01	1		
23	544 37 86-01	1		
24	735 31 14-20	1		
25	544 44 88-01	1		
26	734 11 64-41	1		
27	721 61 83-01	1		

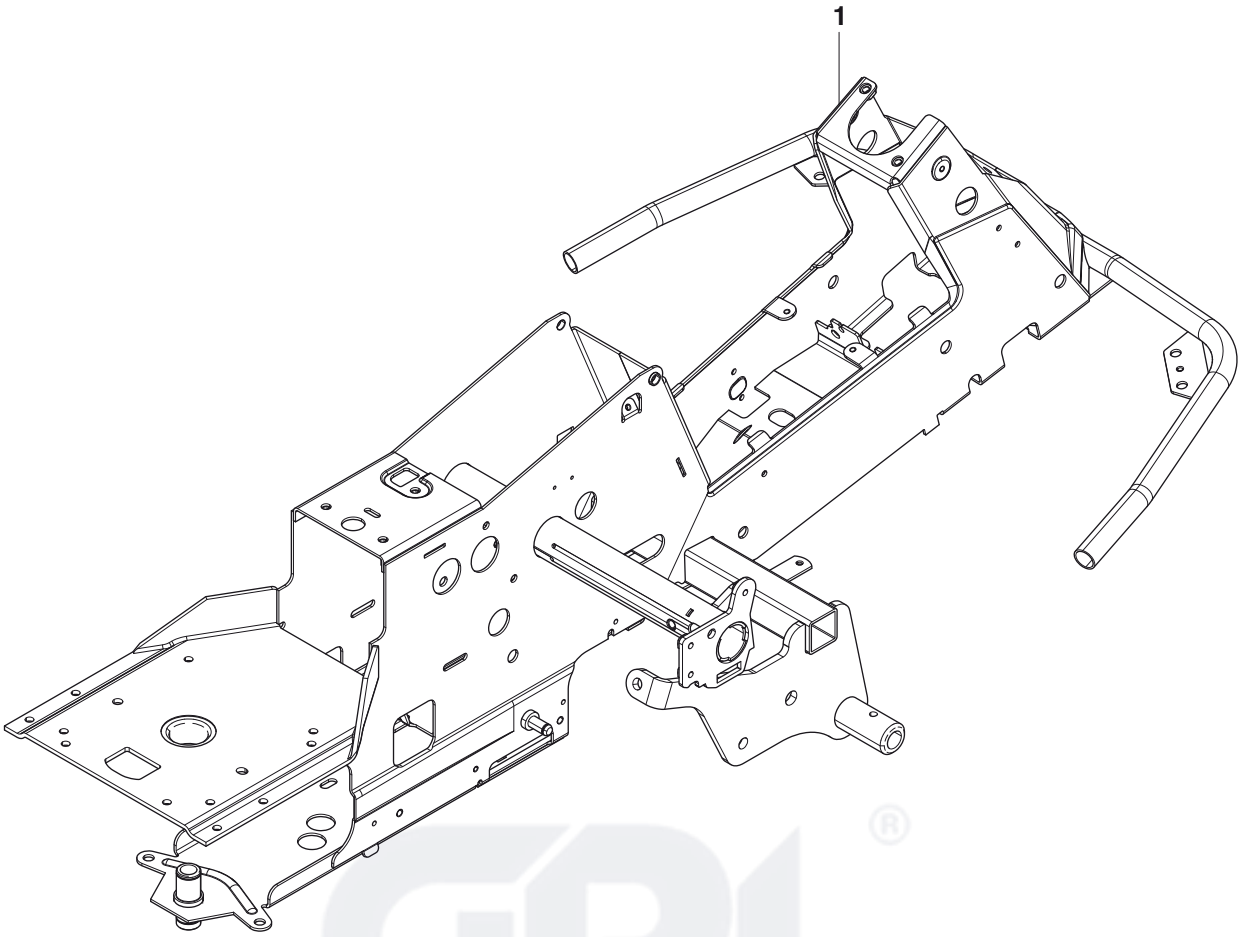
1

Page F **FR2213 RA** **CHASSIS**

Position	Article	Quantity	Notes	Kit
1	577 93 90-02	1		

G FR2213 RA TRANSMISSION

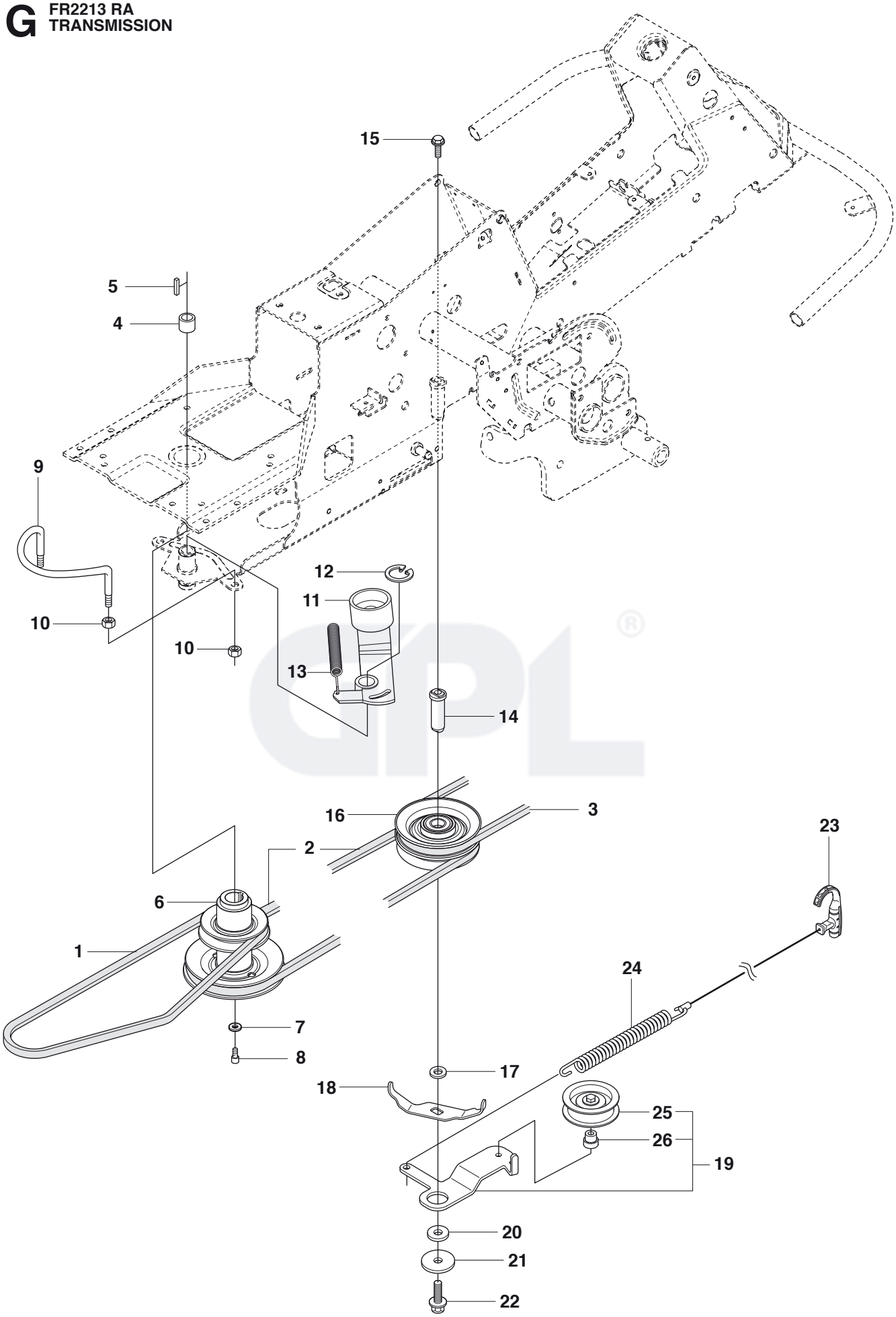

Page G **FR2213 RA** **TRANSMISSION**

Position	Article	Quantity	Notes	Kit
1	522 93 03-01	1		
2	544 40 02-01	1		
3	544 23 89-01	1		
4	506 50 92-01	1		
5	506 55 59-01	1		
6	535 48 24-01	1		
7	506 59 75-01	1		
8	506 55 60-02	1		
9	506 66 45-01	1		
10	731 23 20-51	4		
11	535 48 44-01	1		
12	735 31 26-00	1		
13	506 66 56-01	1		
14	544 42 61-01	1		
15	506 67 54-02	1		
16	535 48 22-01	1		
17	506 77 57-01	1		
18	544 40 53-01	1		
19	544 22 81-01	1		
20	506 59 75-01	1		
21	506 98 25-01	1		
22	506 57 01-05	1		
23	544 23 95-01	1		
24	544 23 88-01	1		
25	506 79 32-02	1		24
26	506 97 64-01	1		24

H FR2213 RA ENGINE

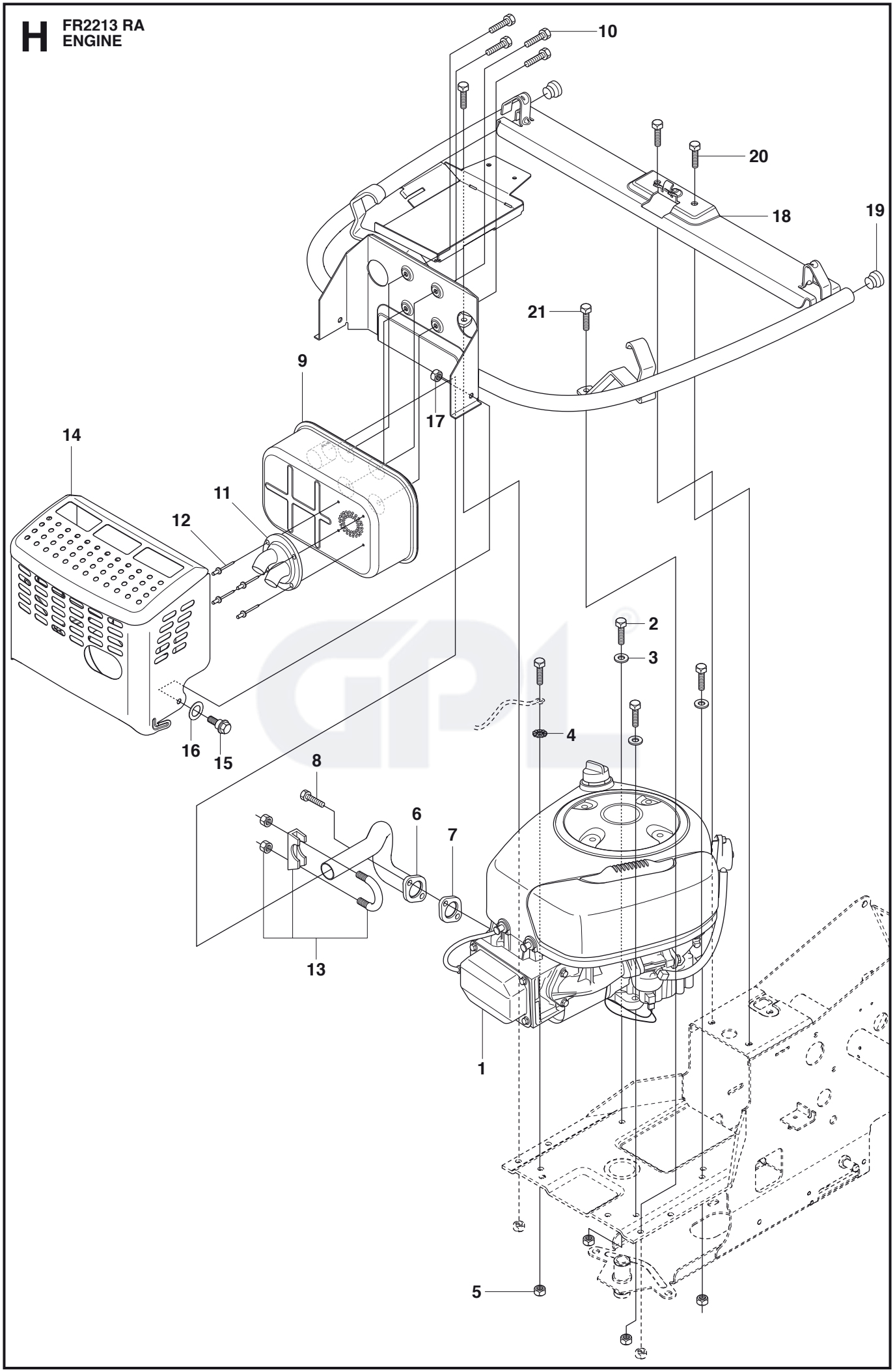

Page H **FR2213 RA** **ENGINE**

Position	Article	Quantity	Notes	Kit
1	577 34 33-01	1		
2	725 24 57-51	4		
3	734 11 64-01	3		
4	735 21 64-00	1		
5	732 21 18-01	4		
6	535 48 52-01	1		
7	506 91 45-01	1		
8	506 55 63-01	2		
9	535 40 08-01	1		
10	725 23 68-61	4		
11	506 82 79-01	1		
12	722 79 23-09	4		
13	506 66 84-01	1		
14	535 41 62-01	1		
15	506 59 74-01	2		
16	506 83 94-01	2		
17	732 21 18-01	2		
18	578 78 47-01	1		
19	506 81 01-01	2		
20	506 57 01-03	2		
21	725 24 51-71	2		
22	506 55 63-02	1		

J1 FR2213 RA
CHASSIS, REAR

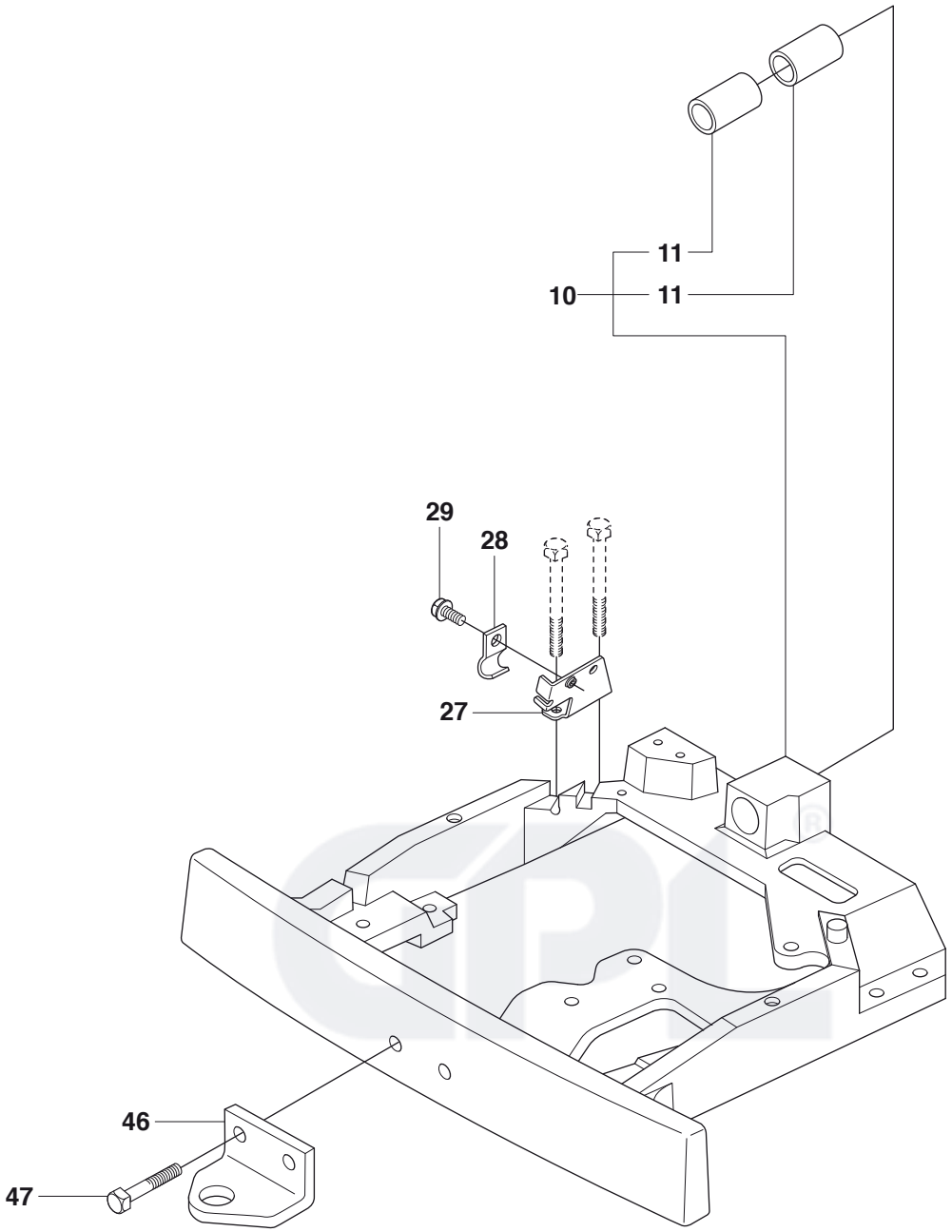

J2 FR2213 RA CHASSIS, REAR

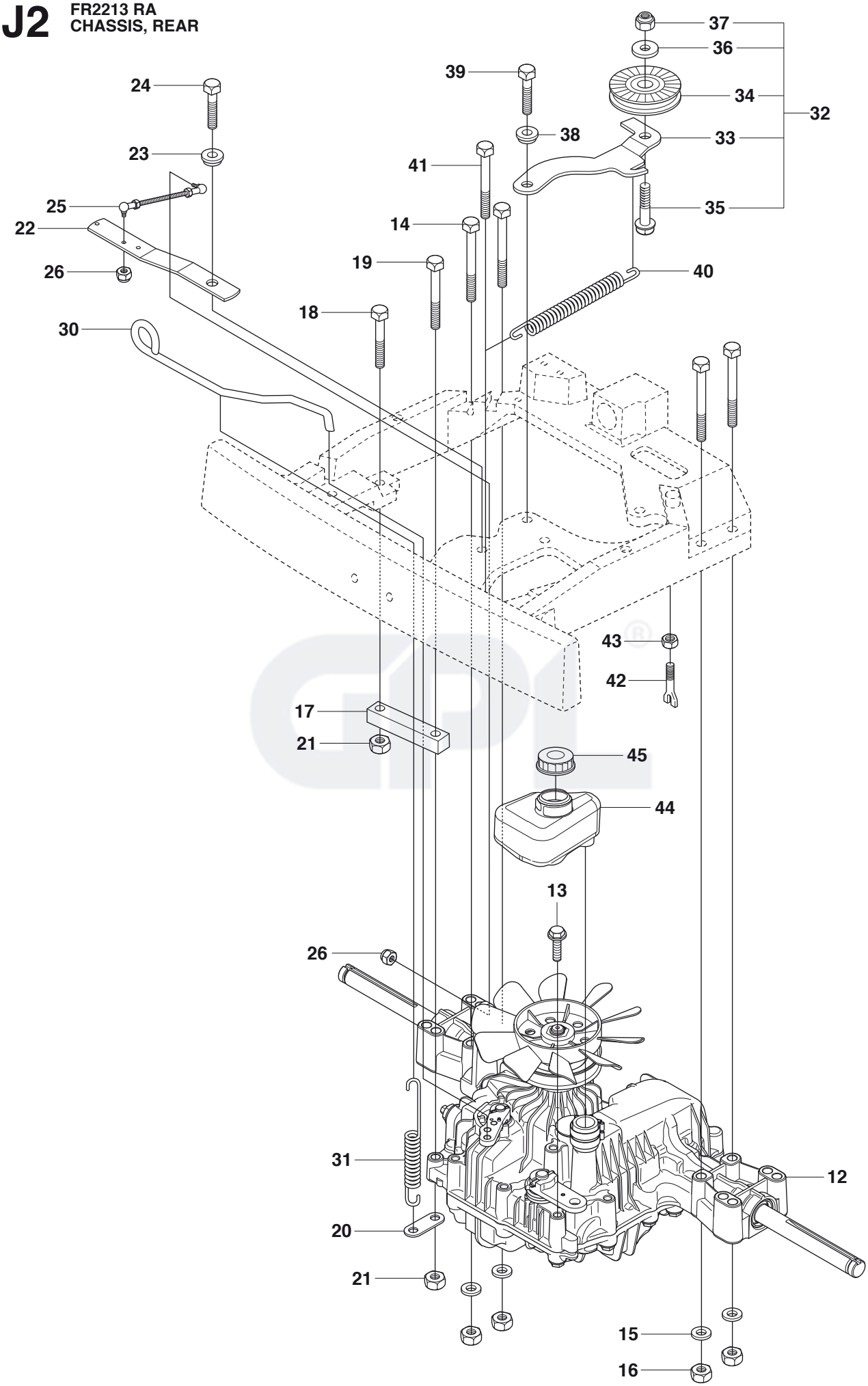

Page J **FR2213 RA** **CHASSIS, REAR**

Position	Article	Quantity	Notes	Kit
10	535 40 60-02	1		
11	506 98 61-02	2		10
12	506 98 63-01	1		
13	506 55 83-02	1		
14	725 24 67-51	4		
15	734 11 64-01	4		
16	731 23 18-01	4		
17	506 98 72-01	1		
18	725 24 59-51	1		
19	725 24 62-51	1		
20	506 59 93-01	1		
21	731 23 18-01	2		
22	506 98 74-03	1		
23	506 91 87-02	1		
24	725 24 51-51	1		
25	506 98 75-01	1		
26	732 21 14-01	2		
27	506 98 77-01	1		
28	506 56 65-01	1		
29	725 23 64-61	1		
30	506 98 82-01	1		
31	506 83 43-01	1		
32	506 98 84-01	1		32
33	506 98 85-01	1		32
34	506 94 69-01	1		32
35	725 24 55-51	1		32
36	734 11 64-41	1		32
37	732 21 18-01	1		
38	506 91 87-02	1		
39	725 24 51-51	1		
40	506 98 86-01	1		
41	725 24 64-51	1		
42	506 98 88-01	1		
43	731 23 20-51	1		
44	506 98 90-01	1		
45	506 98 80-01	1		
46	506 88 99-01	1		
47	725 24 93-71	2		

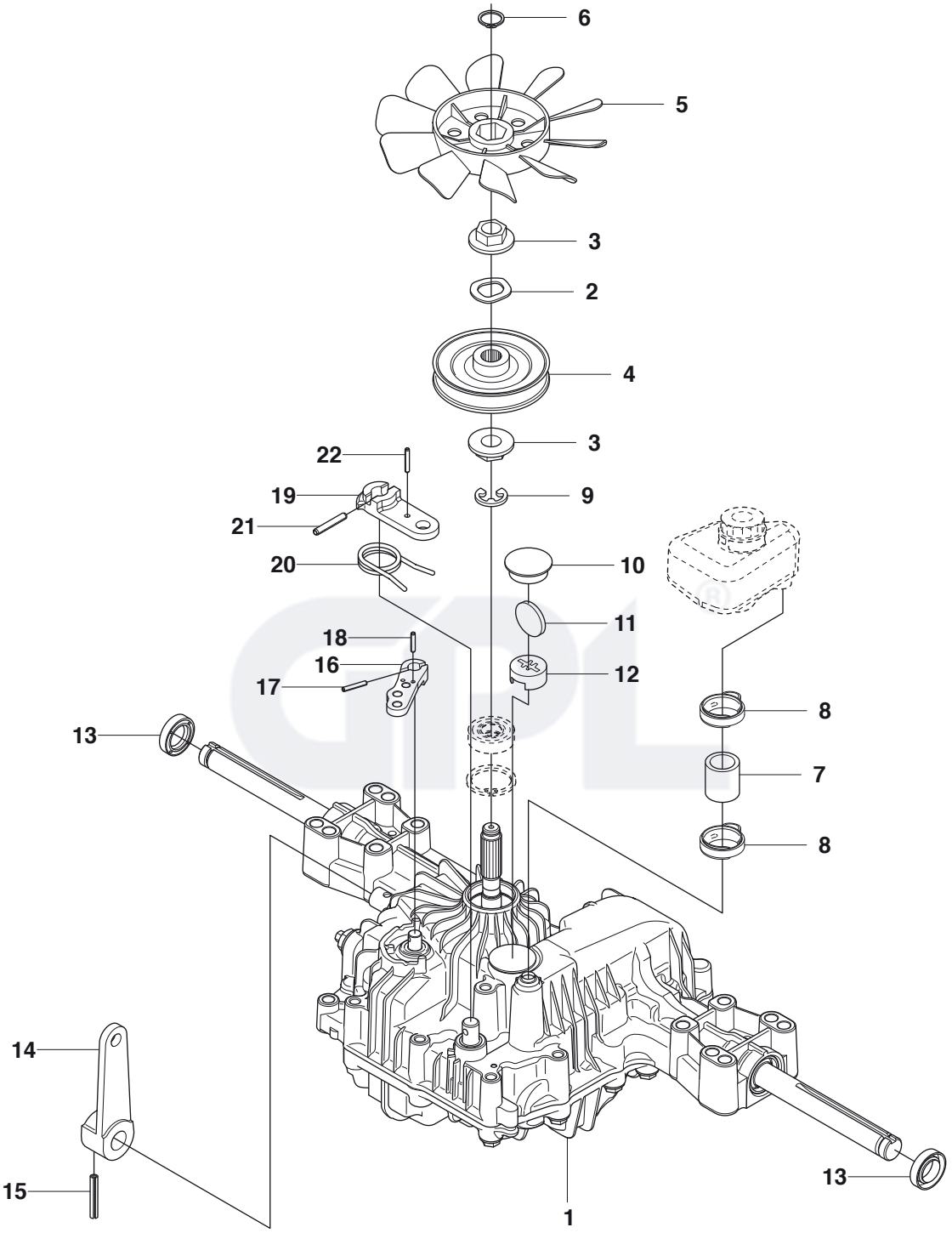
6
5
3
2
4
3
22
19
9
21
20
10
11
18
16
12
17
8
13
7
8
14
15
13
1

Page K **FR2213 RA** **HYDROSTAT**

Position	Article	Quantity	Notes	Kit
1	506 98 63-01	1		
2	506 98 65-01	1		
3	506 98 66-01	2		
4	502 45 19-01	1		
5	506 98 68-01	1		
6	735 31 15-00	1		
7	502 45 16-01	1		
8	506 98 70-01	2		
9	535 40 28-07	1		1
10	535 40 28-32	1		1
11	535 40 28-29	1		1
12	502 45 20-01	1		1
13	535 40 28-37	2		1
14	502 45 32-01	1		1
15	535 40 28-09	1		1
16	535 40 28-17	1		1
17	535 40 28-16	1		1
18	535 40 28-33	1		1
19	535 40 28-38	1		1
20	535 40 28-39	1		1
21	535 40 28-40	1		1
22	535 40 28-41	1		1

L FR2213 RA STEERING

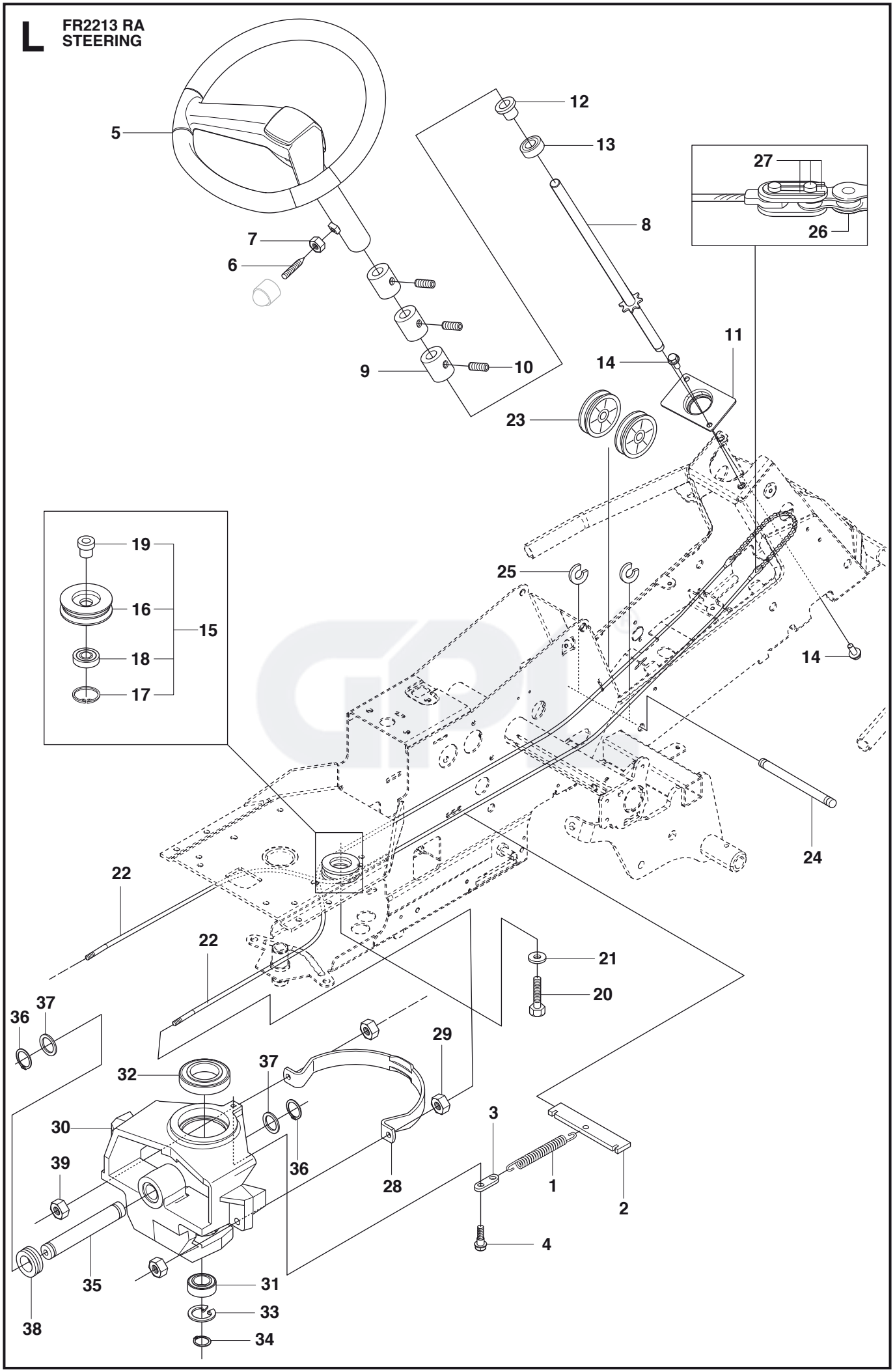

Page L **FR2213 RA** **STEERING**

Position	Article	Quantity	Notes	Kit
1	506 67 19-01	1		
2	506 57 63-01	1		
3	506 67 08-01	1		
4	506 59 74-01	1		
5	544 37 52-03	1		
6	728 74 55-05	1		
7	731 23 18-01	1		
8	535 49 95-01	1		
9	506 86 34-01	3		
10	728 84 43-05	3		
11	578 06 52-01	1		
12	506 88 78-01	1		
13	738 21 04-04	1		
14	506 57 01-04	3		
15	506 50 09-03	1		
16	535 42 41-01	1		15
17	735 31 40-10	1		15
18	738 22 04-19	1		15
19	506 50 08-02	1		15
20	506 67 54-03	1		
21	734 11 74-41	1		
22	506 58 91-04	2		
23	506 52 24-01	2		
24	506 53 94-03	1		
25	735 31 14-20	2		
26	506 55 46-01	1		
27	506 55 47-01	2		
28	544 42 73-01	1		
29	731 23 20-51	2		
30	577 65 93-02	1		
31	738 21 05-04	1		
32	738 21 10-04	1		
33	735 31 40-10	1		
34	735 31 26-00	1		
35	506 98 59-01	1		
36	735 31 26-00	2		
37	506 77 34-01	2		
38	740 68 14-21	1		
39	732 21 20-51	2		

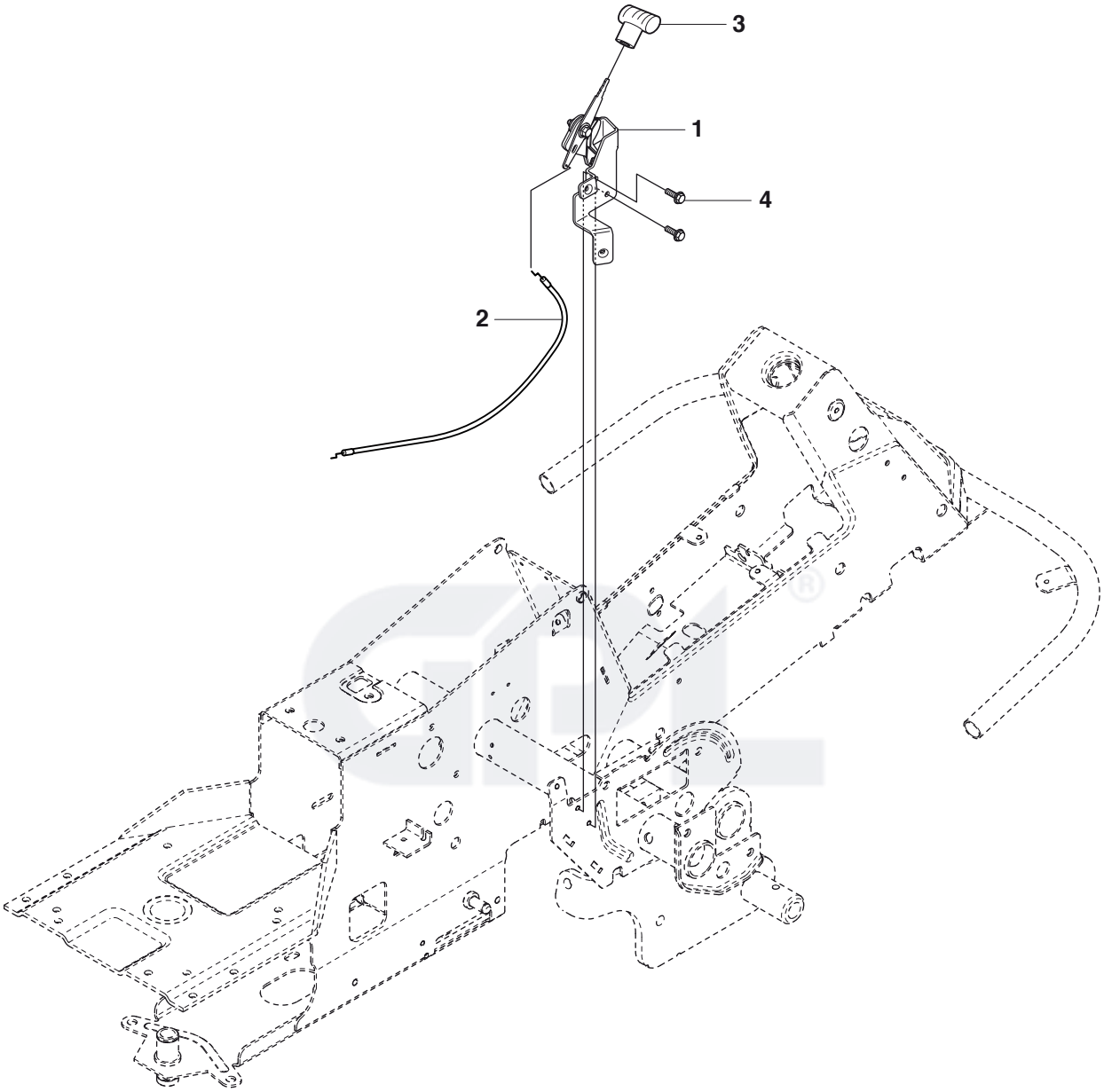
3
1
4
2

Page M **FR2213 RA** **CONTROLS**

Position	Article	Quantity	Notes	Kit
1	502 29 56-01	1		
2	544 30 17-01	1		
3	506 88 91-01	1		
4	725 23 64-61	2		

GPL®

N FR2213 RA PEDALS

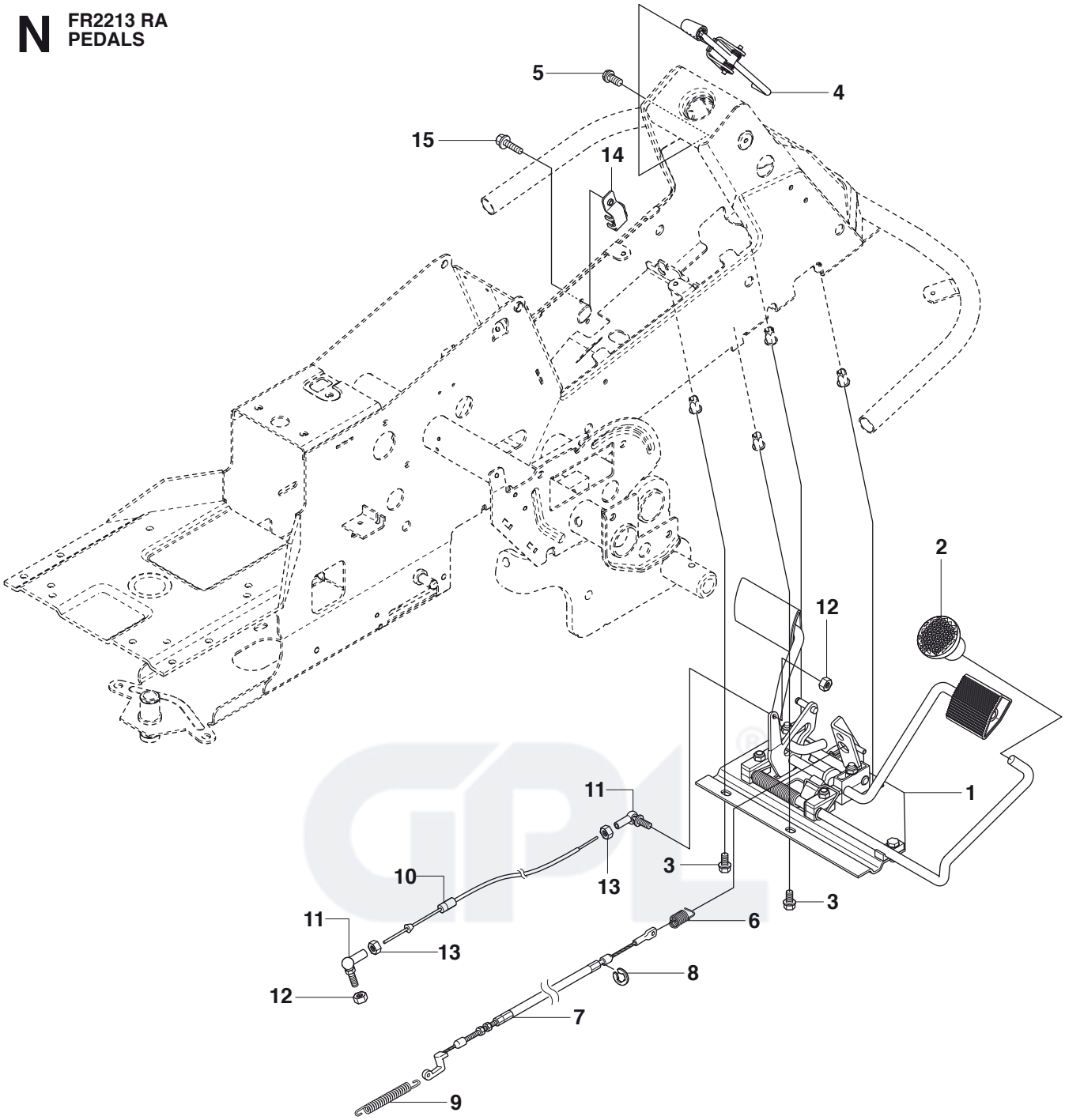

PEDALS

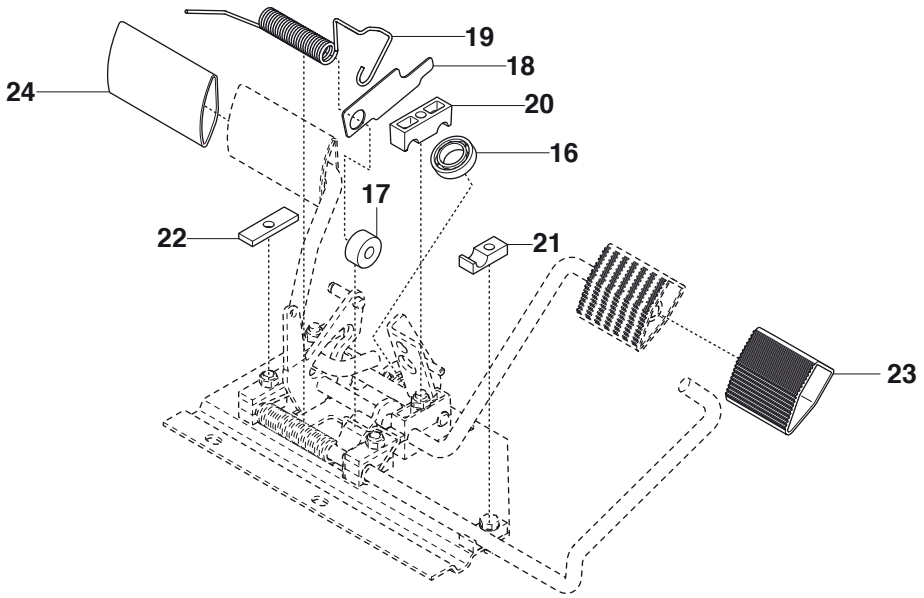

Page N **FR2213 RA** **PEDALS**

Position	Article	Quantity	Notes	Kit
1	544 12 60-01	1		
2	535 47 37-01	1		
3	506 57 01-04	4		
4	544 40 31-01	1		
5	725 23 64-61	2		
6	506 94 63-01	1		
7	506 99 27-01	1		
8	735 31 09-20	1		
9	506 53 56-03	1		
10	574 41 11-01	1		
11	506 55 73-01	2		
12	732 21 14-01	2		
13	731 23 14-01	2		
14	522 43 08-01	1		
15	725 23 64-61	1		
16	738 21 02-04	1		1
17	535 48 02-01	1		1
18	535 48 06-01	1		1
19	535 48 07-01	1		1
20	535 48 08-01	4		1
21	535 48 09-01	1		1
22	535 48 10-01	1		1
23	535 47 88-01	1		1
24	574 51 11-01	1		1

P FR2213 RA ELECTRICAL

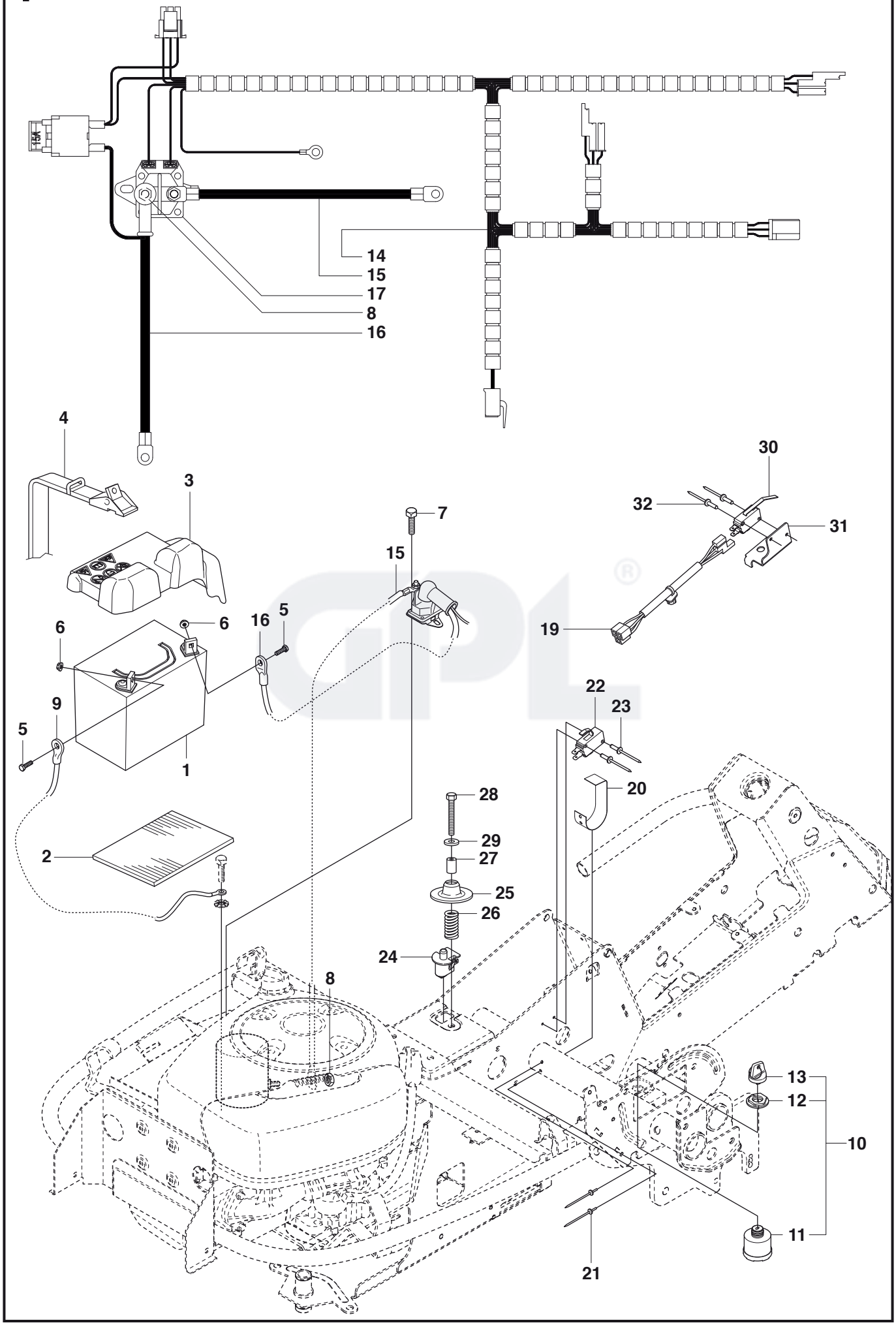

Page P **FR2213 RA** **ELECTRICAL**

Position	Article	Quantity	Notes	Kit
1	510 13 85-01	1		
2	535 44 11-01	1		
3	510 02 69-01	1		
4	506 83 68-02	1		
5	522 62 21-01	2		
6	522 62 43-01	2		
7	725 23 64-61	1		
8	506 89 98-01	3		
9	544 96 76-03	1		
10	544 44 21-01	1		
11	544 44 22-01	1		10
12	544 44 23-01	1		10
13	544 44 24-01	1		10
14	578 33 83-01	1		
15	544 92 86-01	1		
16	544 92 61-04	1		
17	544 43 98-01	1		
19	576 18 54-01	1		
20	506 90 93-01	1		
21	722 78 39-02	2		
22	574 31 60-01	1		
23	544 44 07-01	2		
24	506 90 96-01	1		
25	506 90 97-01	1		
26	544 44 12-01	1		
27	506 90 99-02	1		
28	725 24 60-51	1		
29	734 11 64-01	1		
30	574 31 61-01	1		
31	544 41 57-01	1		
32	544 44 07-01	2		

Q FR2213 RA
WHEELS & TIRES

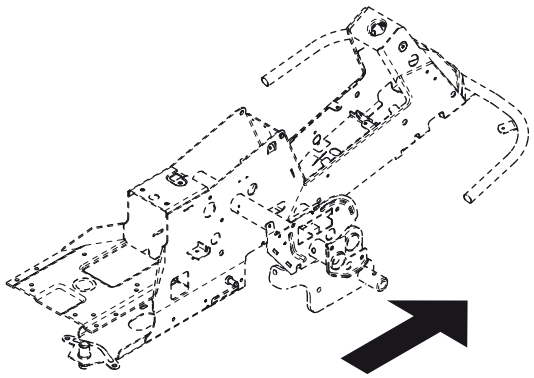

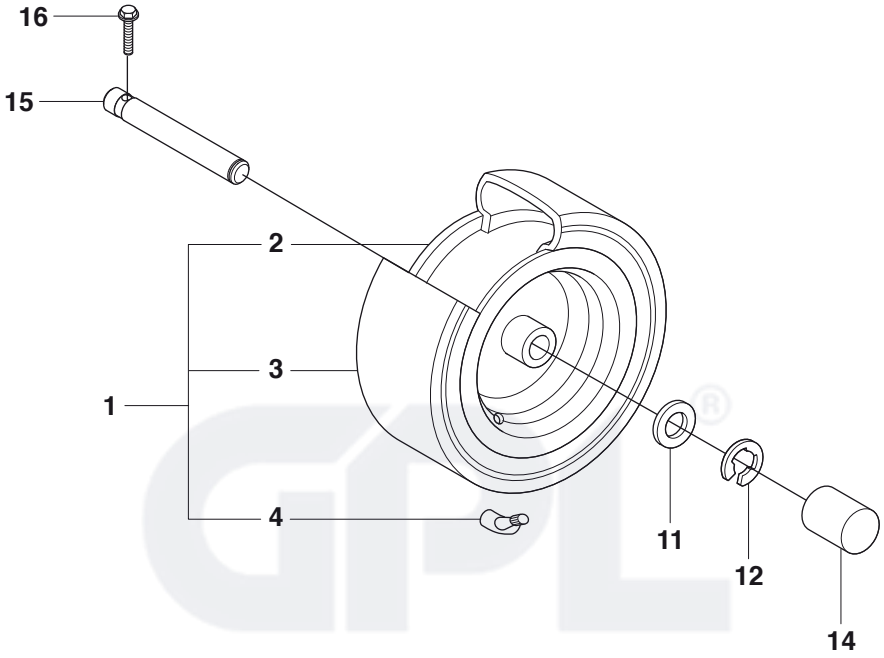

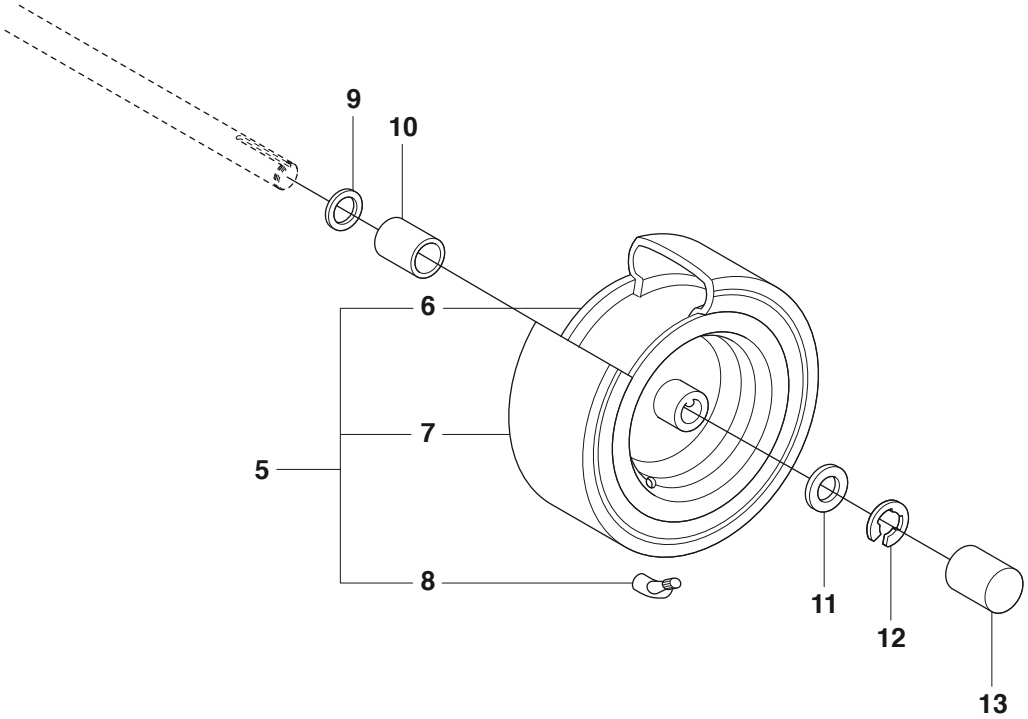

Page Q **FR2213 RA** **WHEELS & TIRES**

Position	Article	Quantity	Notes	Kit
1	523 01 22-01	2		
2	523 03 45-01	1		
3	523 03 46-01	1		
4	523 03 47-01	1		
5	523 01 26-01	2		
6	523 03 48-01	1		
7	523 03 46-01	1		
8	523 03 47-01	1		
9	506 50 48-03	2		
10	506 59 62-03	2		
11	506 50 48-05	4		
12	506 89 90-01	4		
13	506 92 30-01	2		
14	506 95 58-01	2		
15	535 47 08-01	2		
16	725 24 59-61	2		

GPL®

R FR2213 RA DECALS

1

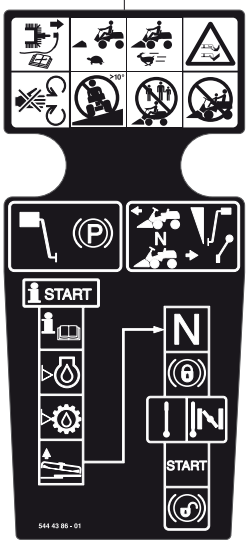

2

3

4

5

7

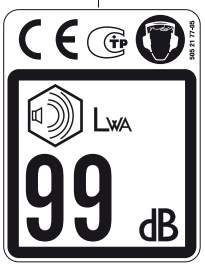

8

9

10

11

12

Page R **FR2213 RA** **DECALS**

Position	Article	Quantity	Notes	Kit
1	544 43 86-01	1		
2	502 29 14-01	1		
3	544 43 88-02	1		
4	544 43 90-04	1		
5	544 43 92-02	1		
7	505 21 77-05	1		
8	535 43 47-01	3		
9	544 21 14-01	2		
10	502 29 21-08	1		
11	574 51 00-01	1		
12	574 21 05-01	1		

S FR2213 RA ATTACHMENTS

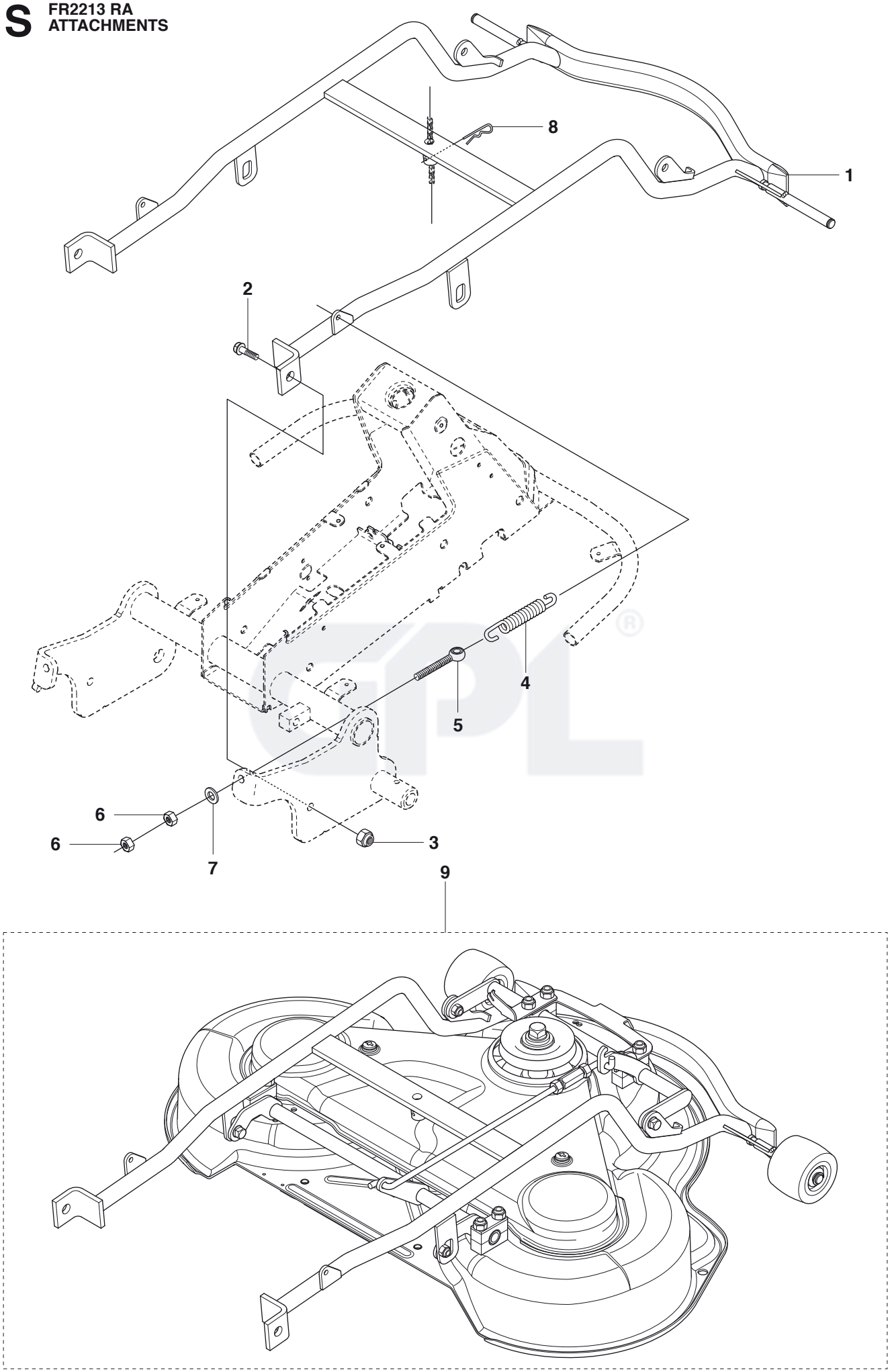

Page S **FR2213 RA** **ATTACHMENTS**

Position	Article	Quantity	Notes	Kit
1	504 79 41-02	1		
2	506 89 58-01	2		
3	732 25 22-01	2		
4	506 67 19-01	2		
5	506 83 77-01	2		
6	731 23 20-51	4		
7	734 11 72-01	2		
8	506 96 66-01	1		
9	544 43 79-06	1		

T1 FR2213 RA CUTTING DECK

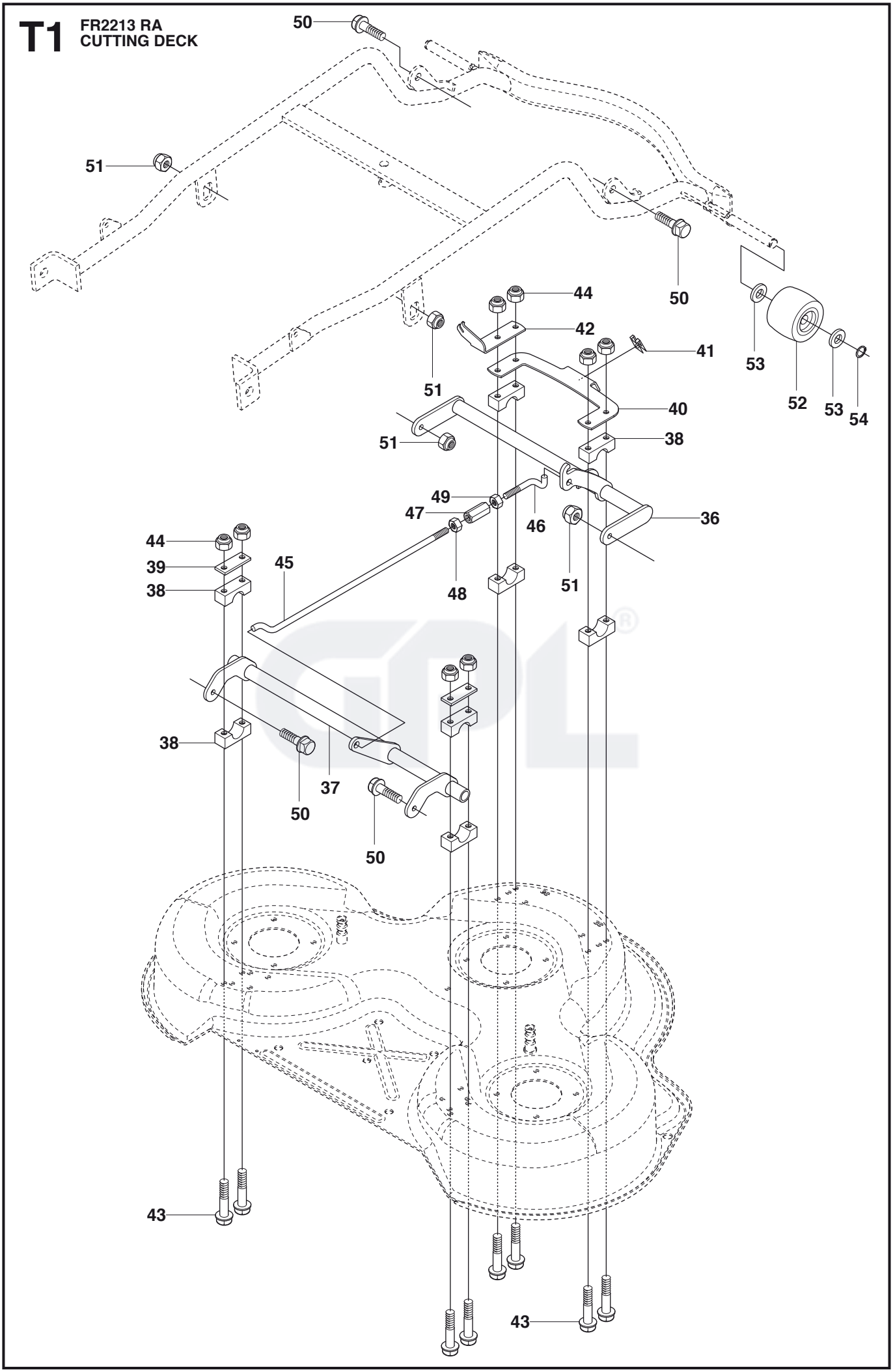

T2 FR2213 RA CUTTING DECK

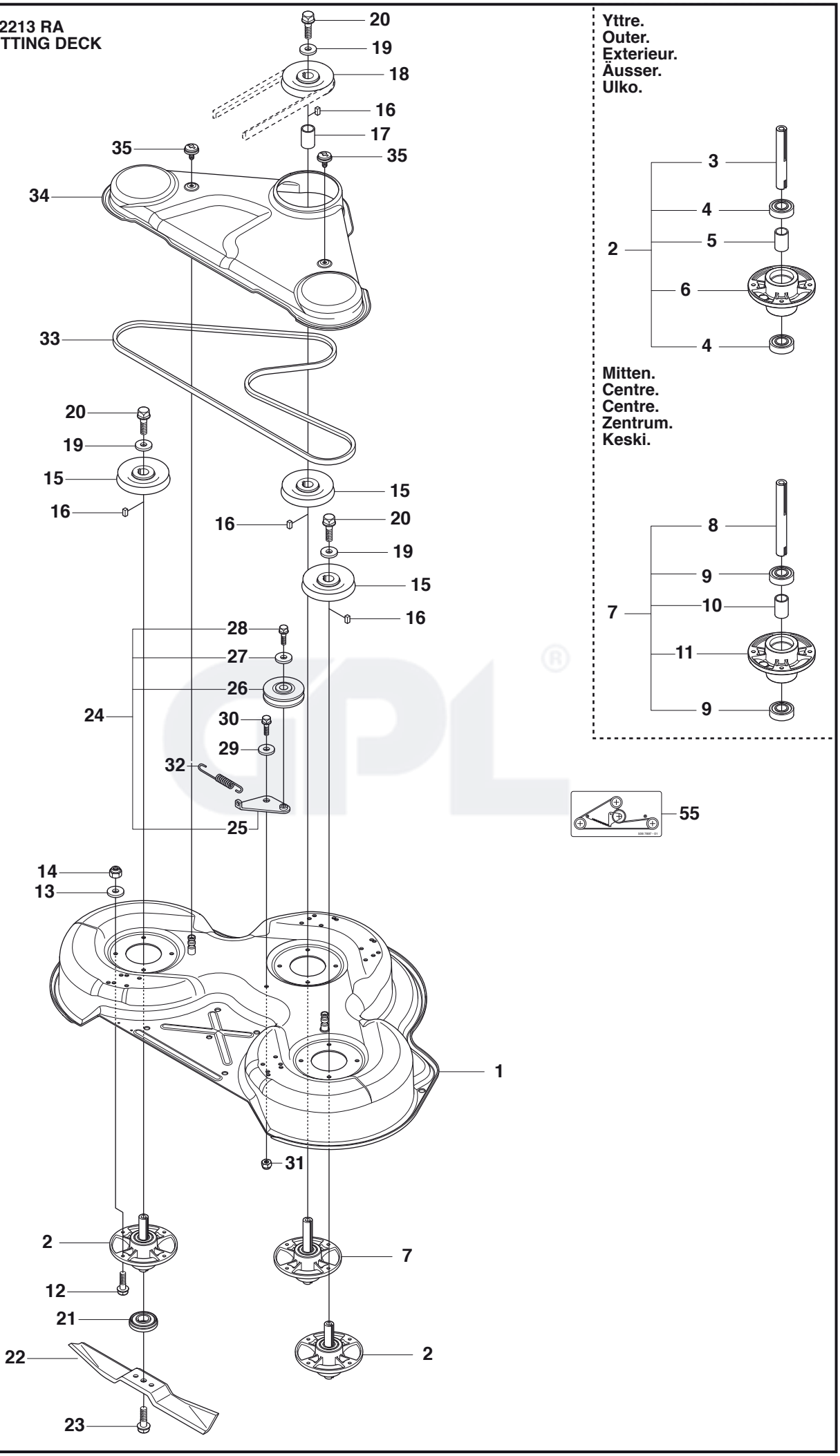

Page T **FR2213 RA** **CUTTING DECK**

Position	Article	Quantity	Notes	Kit
1	544 06 55-07	1		
2	544 06 59-01	2		
3	544 06 79-02	1		2
4	738 23 04-34	2		2
5	544 06 80-01	1		2
6	544 06 78-01	1		2
7	544 06 59-03	1		
8	544 06 79-03	1		7
9	738 23 04-34	2		7
10	544 06 80-01	1		7
11	544 06 78-01	1		7
12	535 42 38-01	12		
13	734 11 64-01	12		
14	732 21 18-01	12		
15	506 92 21-01	3		
16	506 53 35-01	4		
17	544 06 80-03	1		
18	506 77 86-01	1		
19	734 11 74-41	3		
20	506 67 54-02	3		
21	544 06 49-01	3		
22	505 46 35-01	3		
23	506 67 54-02	3		
24	506 79 73-01	1		
25	506 79 71-01	1		24
26	506 79 32-01	1		24
27	734 11 64-41	1		24
28	506 55 83-02	1		24
29	506 91 87-02	1		
30	725 24 51-71	1		
31	732 21 18-01	1		
32	506 53 31-01	1		
33	544 06 81-01	1		
34	522 82 19-02	1		
35	544 40 05-01	2		
36	544 22 07-02	1		
37	544 22 59-02	1		
38	506 86 96-01	8		
39	506 81 38-01	2		
40	544 37 91-01	1		
41	506 96 37-01	1		
42	544 22 83-01	1		
43	725 24 61-51	8		
44	732 21 18-01	8		
45	544 22 69-01	1		
46	544 45 14-01	1		
47	544 45 15-01	1		
48	506 89 76-01	1		
49	731 23 20-51	1		
50	506 59 74-01	4		
51	732 21 18-01	4		
52	506 96 30-01	2		
53	535 46 41-01	4		
54	735 31 17-00	2		
55	506 78 97-01	1		