GTH260 XP, 96041000100, 2006-01

SPARE PARTS LIST

TRACTOR - MODEL NO. GTH260 XP (96041000100), PRODUCT NO. 960 41 00-01
DRIVE

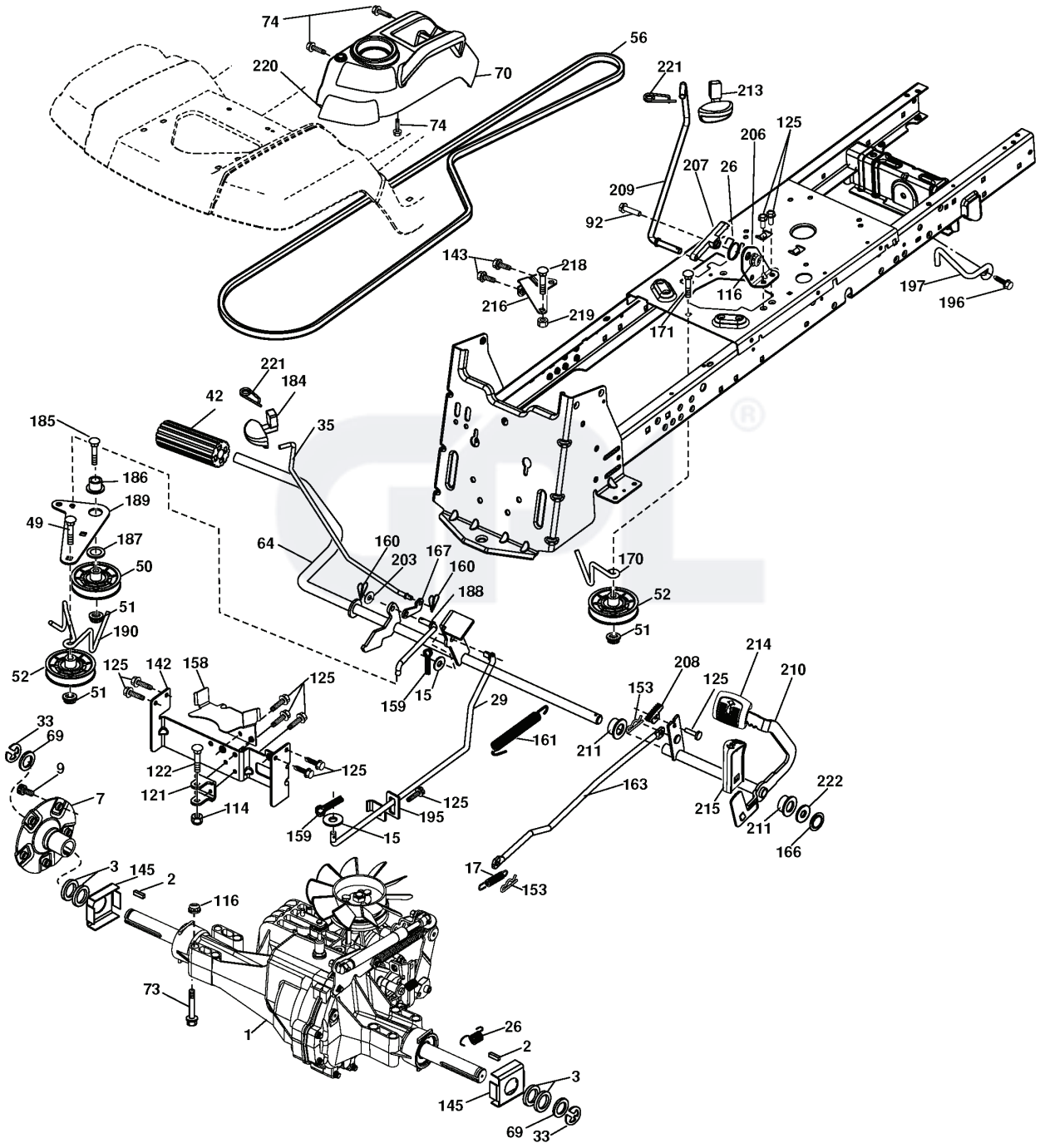

REF.	PART NO.	DESCRIPTION	REMARK	QTY.	KIT
2	532007070	KEY		1	
3	532007563	WASHER		1	
7	532199837	WHEEL		1	
9	532140080	BOLT		1	
15	819131316	WASHER		1	
17	532197296	SPRING		1	
26	532199679	SPRING		1	
29	532197269	ROD		1	
33	812000053	E-CLIP		1	
35	532199591	ROD		1	
42	532123533	PEDAL RUBBER		1	
49	872110614	BOLT		1	
50	532194327	PULLEY		1	
51	873900600	NUT		1	
52	532194326	PULLEY		1	
56	532165813	BELT		1	
64	532197865	SHAFT		1	
69	532123800	WASHER		1	
70	532400530	PANEL		1	
73	874490548	BOLT		1	
74	532142432	SCREW		1	
92	874760520	BOLT		1	
114	873800500	LOCK NUT		1	
116	873900500	NUT		1	
121	532175611	CHAPPE DE FIXATION		1	
122	872010520	BOLT		1	
125	817000512	SCREW		1	
142	532196215	BRACKET		1	
143	817490508	SCREW		1	
145	532163168	WASHER		1	
148	817000612	SCREW		1	
153	532124788	RETAINER RING		1	
158	532194351	BELT GUIDE		1	
159	876020412	SPLIT PIN		1	
160	532169484	PIN		1	
161	532195403	SPRING		1	
163	532197870	ROD		1	
166	532197290	NUT		1	
167	532196211	LATCH		1	
170	532194322	KEEPER		1	
171	872110616	BOLT		1	
184	532403118	CONTROL		1	
185	872110620	BOLT		1	
186	532194321	SPACER		1	
187	819133210	WASHER		1	
188	532194323	LINK		1	
189	532194317	PLATE		1	
190	532194318	BELT GUIDE		1	
195	532197331	BRACKET		1	
196	817000616	SCREW		1	
197	532199769	BRACKET		1	
203	819111116	WASHER		1	
206	532197867	BRACKET		1	
207	532197868	LATCH		1	
208	532197869	SUPPORT		1	
209	532199592	ROD		1	
210	532197860	ARM		1	
211	532120183	BEARING		1	
213	532403119	CONTROL		1	
214	532401722	PEDAL		1	
215	532401723	PEDAL		1	
216	532196131	BRACKET		1	
218	874780520	BOLT		1	
219	532195780	SPACER		1	
220	532198908	LENS		1	
221	532403187	SPRING		1	
222	819212010	WASHER		1	
223	874760520	BOLT		1	

TRACTOR - MODEL NO. GTH260 XP (96041000100), PRODUCT NO. 960 41 00-01

MOWER LIFT

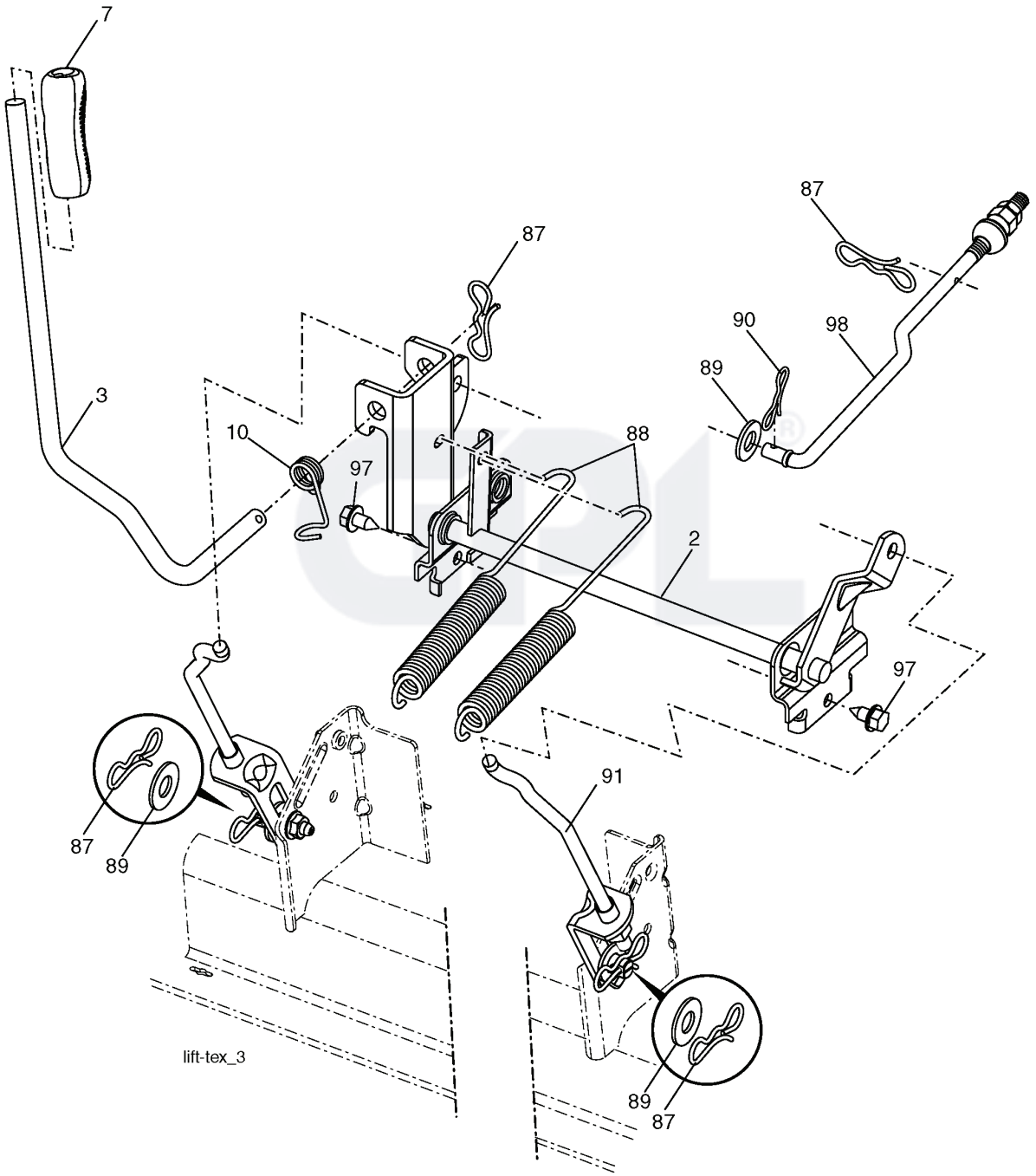

REF.	PART NO.	DESCRIPTION	REMARK	QTY.	KIT
2	532195223	SHAFT		1	
3	532195230	LEVER		1	
7	532196492	GRIP		1	
10	532196314	SPRING		1	
87	532194209	SPRING		1	
88	532195304	SPRING		1	
89	819191912	WASHER		1	
90	532194208	PIN		1	
91	532197984	LINK		1	
97	817060612	SCREW		1	
98	532195264	LINK		1	

TRACTOR - MODEL NO. GTH260 XP (96041000100), PRODUCT NO. 960 41 00-01

STEERING ASSEMBLY

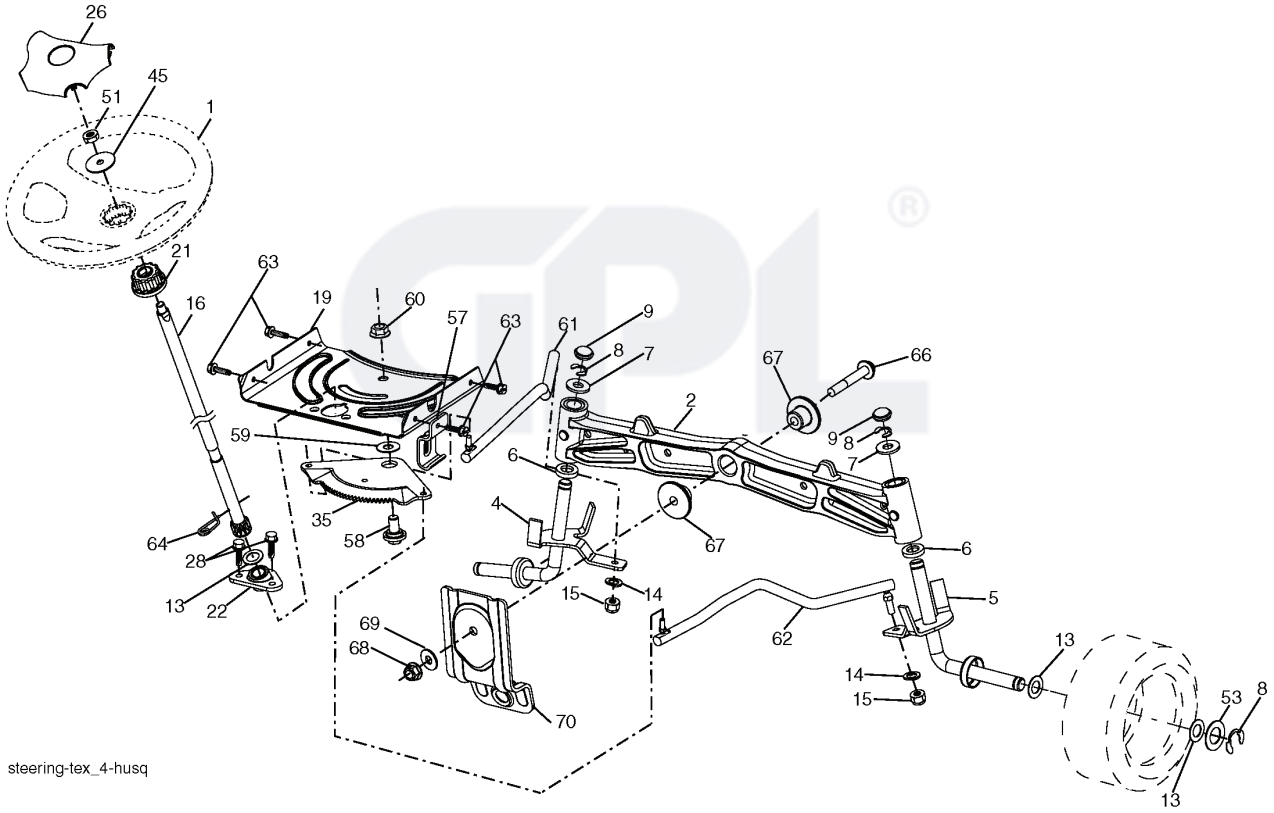

REF.	PART NO.	DESCRIPTION	REMARK	QTY.	KIT
1	532193651	STEERING WHEEL		1	
2	532195968	SHAFT		1	
4	532403172	SPINDLE SHAFT		1	
5	532403173	SPINDLE SHAFT		1	
6	532124931	WASHER		1	
7	532121748	WASHER		1	
8	812000029	RETAINER RING		1	
9	532121232	HUB CAP		1	
13	532121749	WASHER		1	
14	810040600	WASHER		1	
15	873540600	NUT		1	
16	532194746	SHAFT		1	
19	532194729	PLATE		1	
21	532186737	ADAPTER		1	
22	532194845	BUSHING		1	
26	532193652	HUB		1	
28	817000612	SCREW		1	
35	532194732	PLATE		1	
45	819183812	WASHER		1	
51	873940800	NUT		1	
53	532188967	WASHER		1	
57	532197246	BRACKET		1	
58	532194747	BOLT		1	
59	532194748	WASHER		1	
60	873971000	NUT		1	
61	532194740	LINK		1	
62	532194741	LINK		1	
63	817000512	SCREW		1	
64	532199849	SPRING RETAINER		1	
66	871020748	BOLT		1	
67	532194737	BUSHING		1	
68	873900700	NUT		1	
69	532199162	WASHER		1	
70	532196197	BRACKET		1	

TRACTOR - MODEL NO. GTH260 XP (96041000100), PRODUCT NO. 960 41 00-01

MOWER DECK

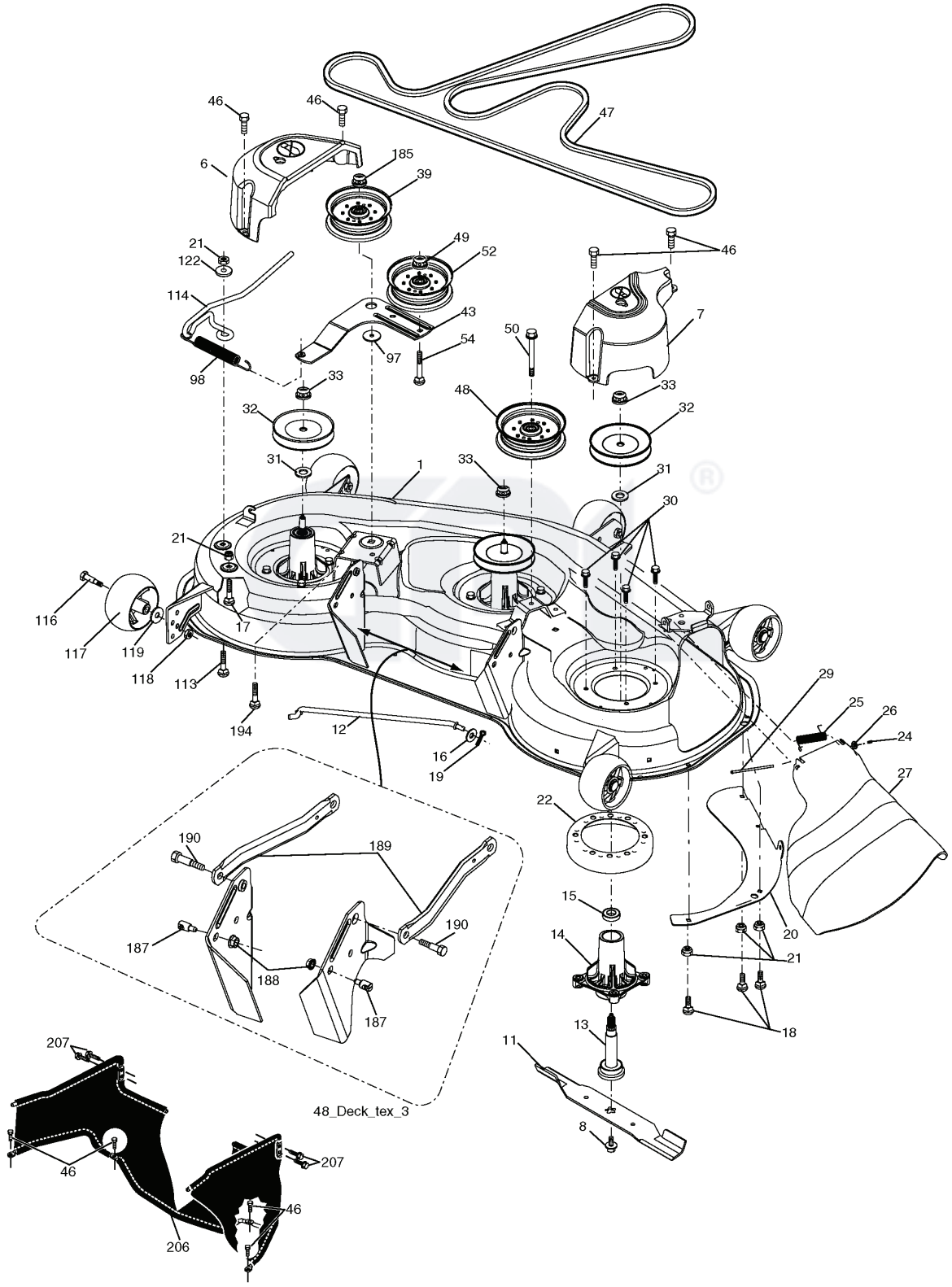

REF.	PART NO.	DESCRIPTION	REMARK	QTY.	KIT
1	532197216	DECK		1	
6	532199405	COVER		1	
7	532199406	COVER		1	
8	532174365	BOLT		1	
11	532180054	BLADE		1	
12	532400337	TIGE ANTI-ROULIS		1	
13	532187291	SHAFT		1	
14	532187281	BEARING HOUSING		1	
15	532110485	BEARING		1	
16	819131312	WASHER		1	
17	872110505	BOLT		1	
18	872140505	BOLT		1	
19	532194208	PIN		1	
20	532174378	BAFFLE		1	
21	873680500	NUT		1	
22	532174493	STRIPPER. MANDREL.BLACK		1	
24	532105304	HUB CAP		1	
25	532178102	SPRING		1	
26	532110452	NUT		1	
27	532181707	SHIELD		1	
29	532131491	SHAFT		1	
30	532173984	SCREW		1	
31	532187690	WASHER		1	
32	532153532	PULLEY		1	
33	532400234	NUT		1	
39	532197380	PULLEY		1	
43	532196065	ARM		1	
46	532137729	SCREW		1	
47	532197242	BELT		1	
48	532193197	PULLEY		1	
49	873900600	NUT		1	
50	872110612	BOLT		1	
52	532197379	PULLEY		1	
54	817490636	SCREW		1	
97	532178515	WASHER		1	
98	532196105	SPRING		1	
113	872110508	BOLT		1	
114	532197451	TIGE DE TENSION		1	
116	532193406	BOLT		1	
117	532174873	WHEEL		1	
120	819132012	WASHER		1	
122	532187557	BUSHING		1	
185	873900700	NUT		1	
187	532195161	STUD		1	
188	873970500	NUT		1	
189	532195185	ARM		1	
190	532196539	BOLT		1	
194	872140716	BOLT		1	
202	532402573	BAFFLE		1	
204	872040410	BOLT		1	
205	873680400	NUT		1	
206	532400284	TOILE DE PROTECTION COURROIE		1	
207	817000512	SCREW		1	
- -	532187292	MANDREL		1	
- -	532403406	DECK SHELL		1	

TRACTOR - MODEL NO. GTH260 XP (96041000100), PRODUCT NO. 960 41 00-01

ENGINE

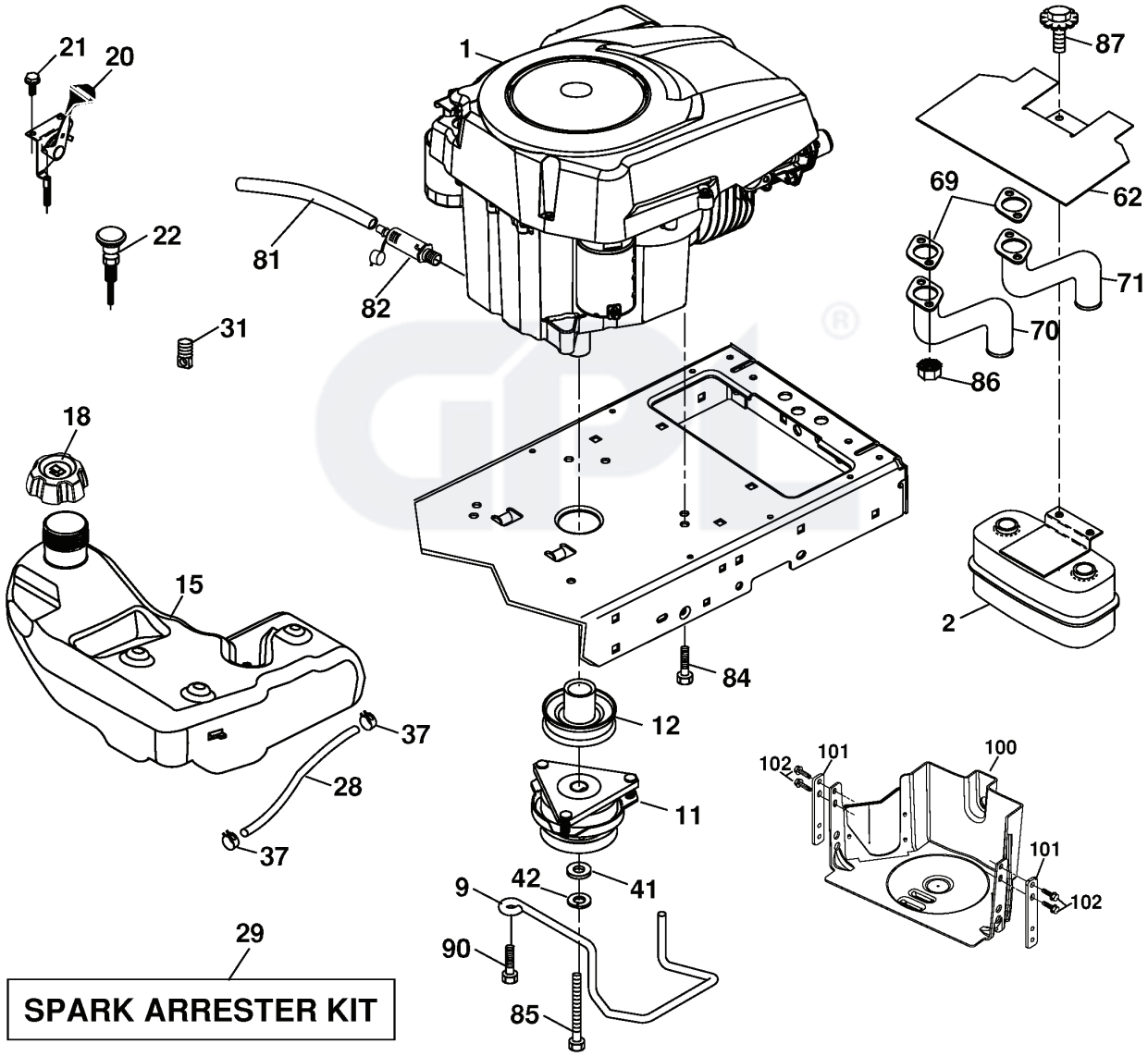

engine-tex_12-kohl

REF.	PART NO.	DESCRIPTION	REMARK	QTY.	KIT
2	532149723	MUFFLER		1	
9	532194320	BELT GUIDE		1	
11	532179335	CLUTCH		1	
12	532194343	PULLEY		1	
15	532193499	FUEL TANK		1	
18	532194267	FUEL CAP		1	
20	532182937	THROTTLE CONTROL		1	
21	532191611	SCREW		1	
22	532191596	COMMA*RPL.PAR 532187767428		1	
28	532008543	HOSE		1	
29	532137180	SPARK ARRESTER KIT		1	
31	532145006	CLIP		1	
37	532123487	HOSE CLAMP		1	
41	532126197	WASHER		1	
42	810040700	WASHER		1	
62	532146629	HEAT SHIELD		1	
70	532146699	PIPE		1	
71	532146700	PIPE		1	
80	532163305	NUT FLANGE M8-1.25 NON-		1	
81	532148456	TUBE		1	
82	532181654	PLUG		1	
84	817060620	SCREW		1	
85	532179953	BOLT		1	
86	532184362	NUT		1	
87	532198239	BOLT		1	
90	817000616	SCREW		1	
91	532187495	BUSHING		1	
96	532155138	CLIP		1	
100	532400285	PROTECTOR		1	
101	532402441	MAINTIEN PROTEGE POULIE		1	
102	817000512	SCREW		1	
103	810040600	WASHER		1	
104	873540600	NUT		1	

ILLUSTRATED PARTS LIST

MFG. ID NO. 96041000100
CUSTOMER CATALOG NO. GTH260 XP
PRODUCT NO. 960 41 00 01

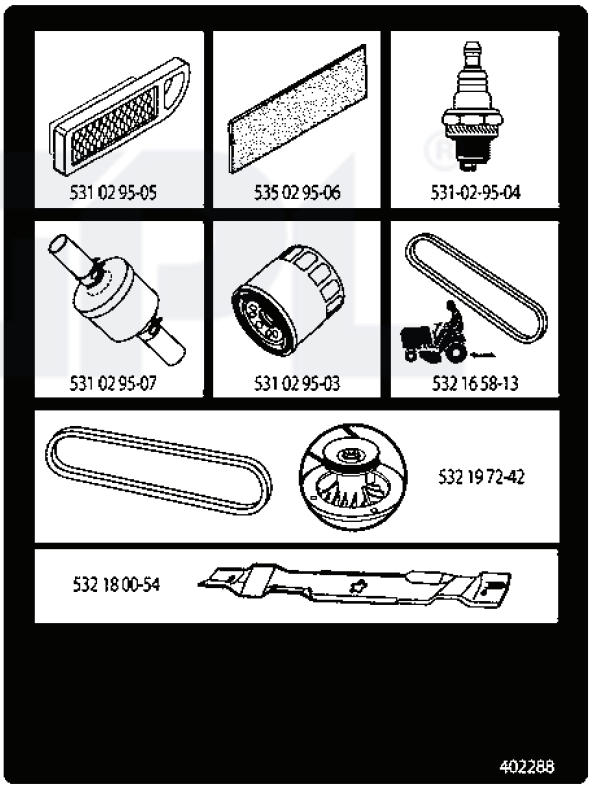

REF.	PART NO.	DESCRIPTION	REMARK	QTY.	KIT
531 02 95-05	531029505	AIR FILTER		1	
531 02 95-07	531029507	FILTER		1	
532 18 00-54	532180054	BLADE		1	
535 02 95-06	535029506			1	
531 02 95-03	531029503	FILTER		1	
531–02-95–04	531029504	SPARK PLUG		1	
532 16 58-13	532165813	BELT		1	
532 19 72-42	532197242	BELT		1	

TRACTOR - MODEL NO. GTH260 XP (96041000100), PRODUCT NO. 960 41 00-01
ELECTRICAL

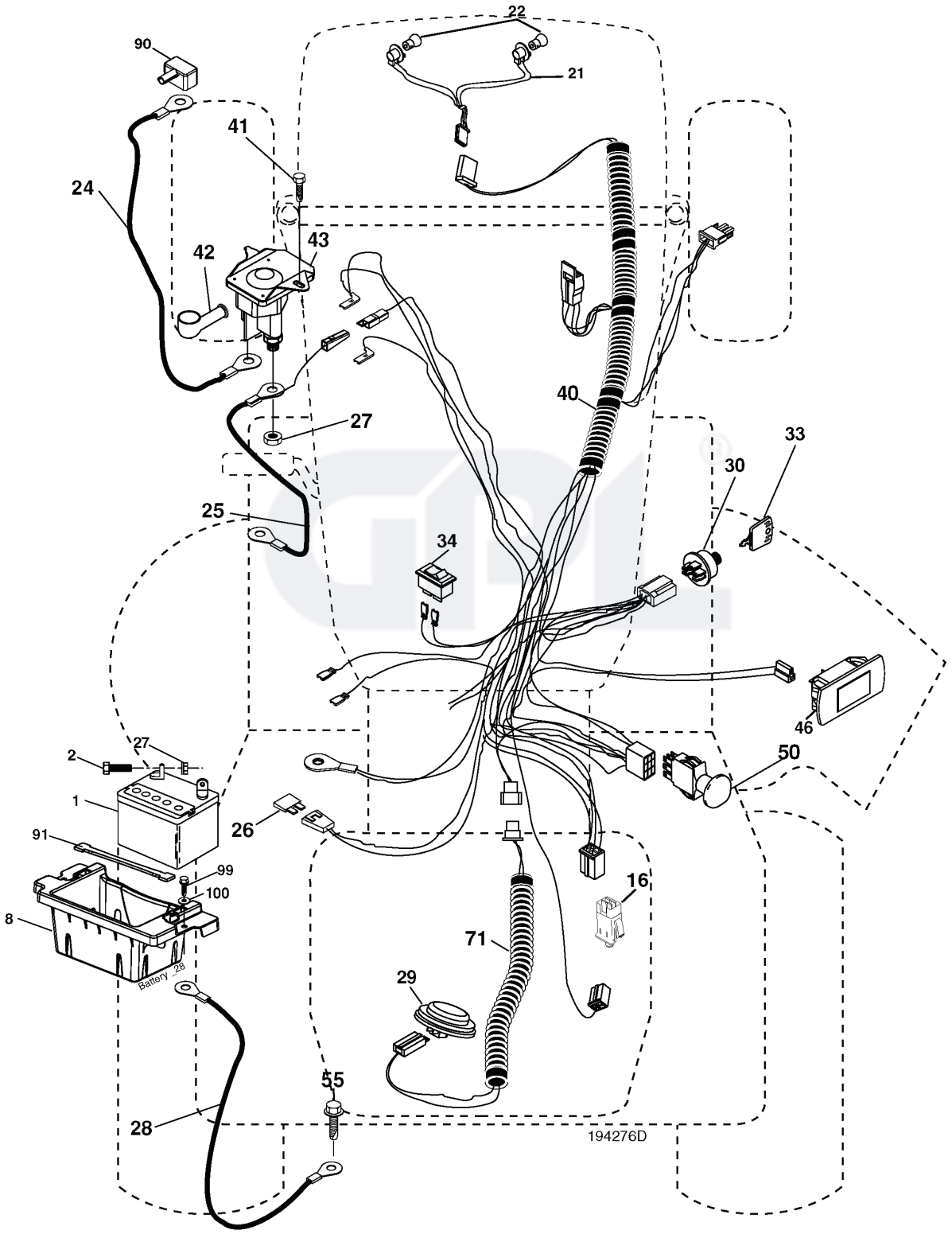

REF.	PART NO.	DESCRIPTION	REMARK	QTY.	KIT
1	532144927	BATTERY		1	
2	874760412	BOLT		1	
8	532186491	BOX		1	
16	532176138	MICRO SWITCH		1	
21	532183759	HARNESS		1	
22	532004152	BULB		1	
24	532400254	CABLE		1	
26	532175158	FUSE		1	
28	532145491	CABLE		1	
29	532401545	SWITCH		1	
30	532193350	IGNITION MODULE		1	
33	532140401	KEY		1	
34	532110712	SWITCH		1	
40	532194276	CABLE ASSY		1	
42	532154336	COVER		1	
46	532198138	DISPLAY		1	
50	532174651	SWITCH		1	
55	817490508	SCREW		1	
71	532401104	CABLE ASSY		1	
90	532180449	COVER		1	
91	532190270	STRAP BATTERY MOUNT FRO		1	
99	817670412	SCREW		1	
100	819091416	WASHER		1	

TRACTOR - MODEL NO. GTH260 XP (96041000100), PRODUCT NO. 960 41 00-01
CHASSIS

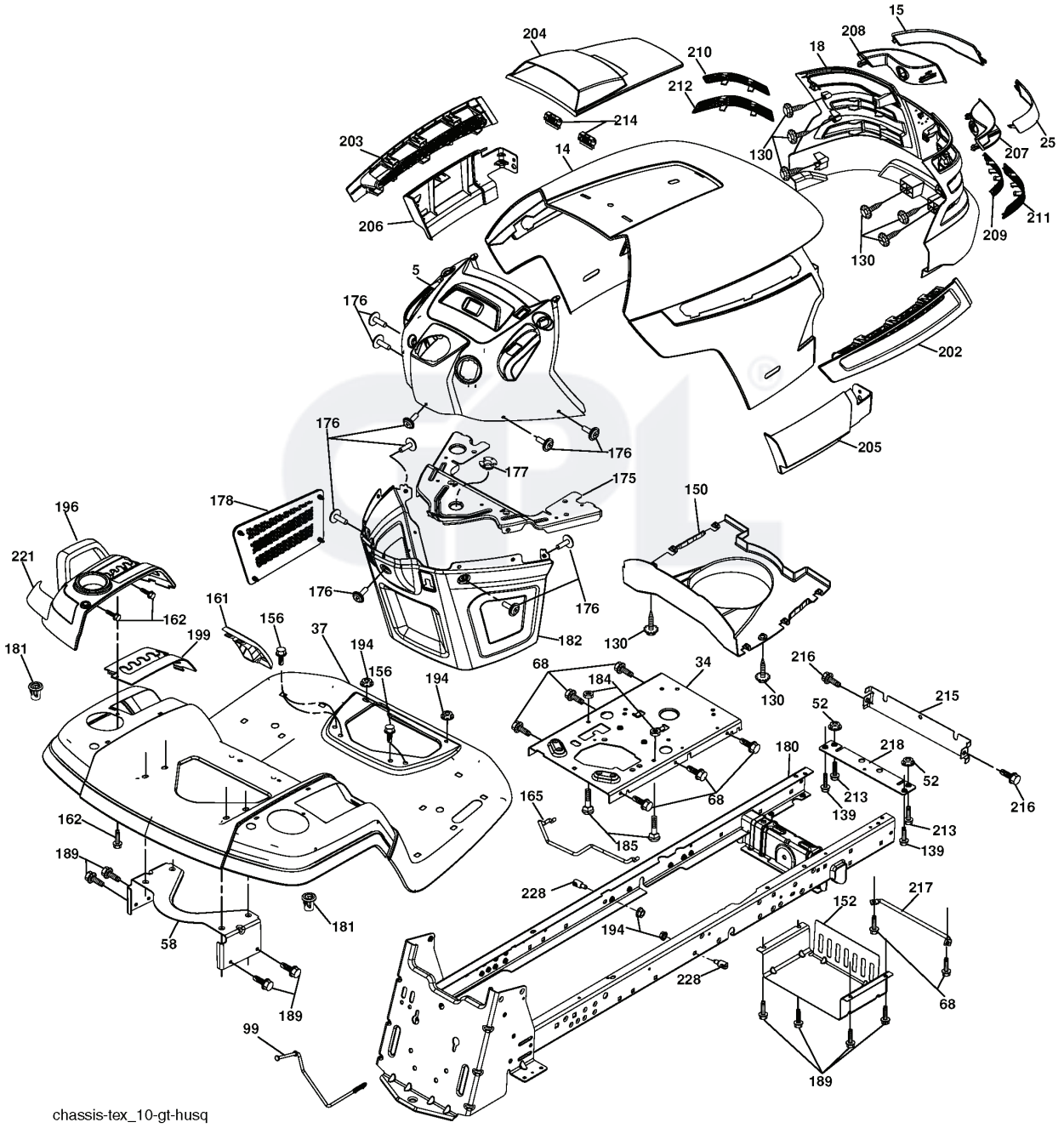

REF.	PART NO.	DESCRIPTION	REMARK	QTY.	KIT
5	532401823	PANEL		1	
14	532401824	HOOD		1	
15	532198907	LENS		1	
18	532400297	COVER		1	
25	532198906	LENS		1	
34	532196125	PLATE		1	
37	532401825	FENDER		1	
52	873680500	NUT		1	
58	532194314	BRACKET		1	
68	817490508	SCREW		1	
99	532197273	ROD		1	
130	532191611	SCREW		1	
139	532171873	BOLT		1	
150	532198512	BRACKET		1	
152	532196390	SHIELD		1	
156	817000512	SCREW		1	
161	532401826	CONSOLE		1	
162	532142432	SCREW		1	
165	532196826	BRACKET		1	
175	532196304	SUPPORT		1	
176	532400776	SCREW		1	
177	532195227	BUSHING		1	
178	532199782	NET		1	
180	532195477	FRAME		1	
181	532403025	BUSHING		1	
182	532194787	PANEL		1	
189	817000512	SCREW		1	
194	873900500	NUT		1	
195	532199018	PLUG		1	
196	532400299	CONSOLE		1	
199	532198259	PLATE		1	
202	532403048	LIST		1	
203	532403076	LIST		1	
204	532198904	AIR CONDUCTOR		1	
205	532401709	LIST		1	
206	532401711	LIST		1	
207	532197198	LENS		1	
208	532197199	LENS		1	
209	532199130	INSERT		1	
210	532199131	INSERT		1	
211	532199132	INSERT		1	
212	532199133	INSERT		1	
213	874760512	BOLT		1	
214	532199145	CLIP		1	
215	532198043	COVER		1	
216	817670508	SCREW		1	
217	532156524	SHAFT		1	
218	532196395	PLATE		1	
221	532198909	LENS		1	
228	532195161	STUD		1	
- -	532404137	TROU*RPL.PAR 532401556428		1	

TRACTOR - MODEL NO. GTH260 XP (96041000100), PRODUCT NO. 960 41 00-01

SEAT ASSEMBLY

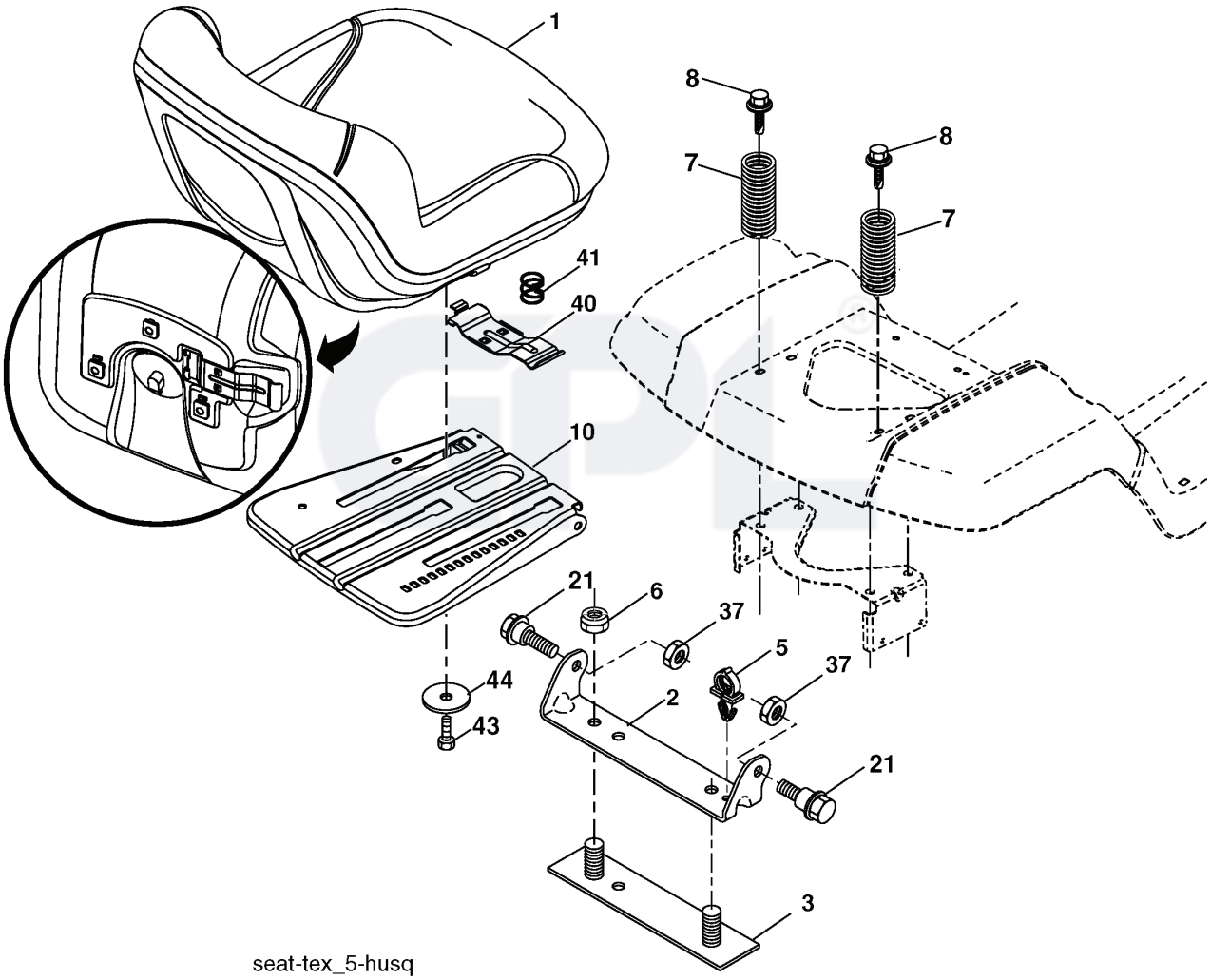

REF.	PART NO.	DESCRIPTION	REMARK	QTY.	KIT
1	532197526	SEAT		1	
2	532180166	BRACKET		1	
3	532140675	STRAP		1	
5	532145006	CLIP		1	
6	873800600	NUT		1	
7	532124181	SPRING		1	
8	532171877	BOLT		1	
10	532196977	PLATE		1	
21	532171852	BOLT		1	
37	873800500	LOCK NUT		1	
40	532197661	HANDLE		1	
41	532198200	SPRING		1	
43	874760612	BOLT		1	
44	819133812	WASHER		1	

TRACTOR - MODEL NO. GTH260 XP (96041000100), PRODUCT NO. 960 41 00-01

SCHEMATIC

02928-194276_Regulated-Tex

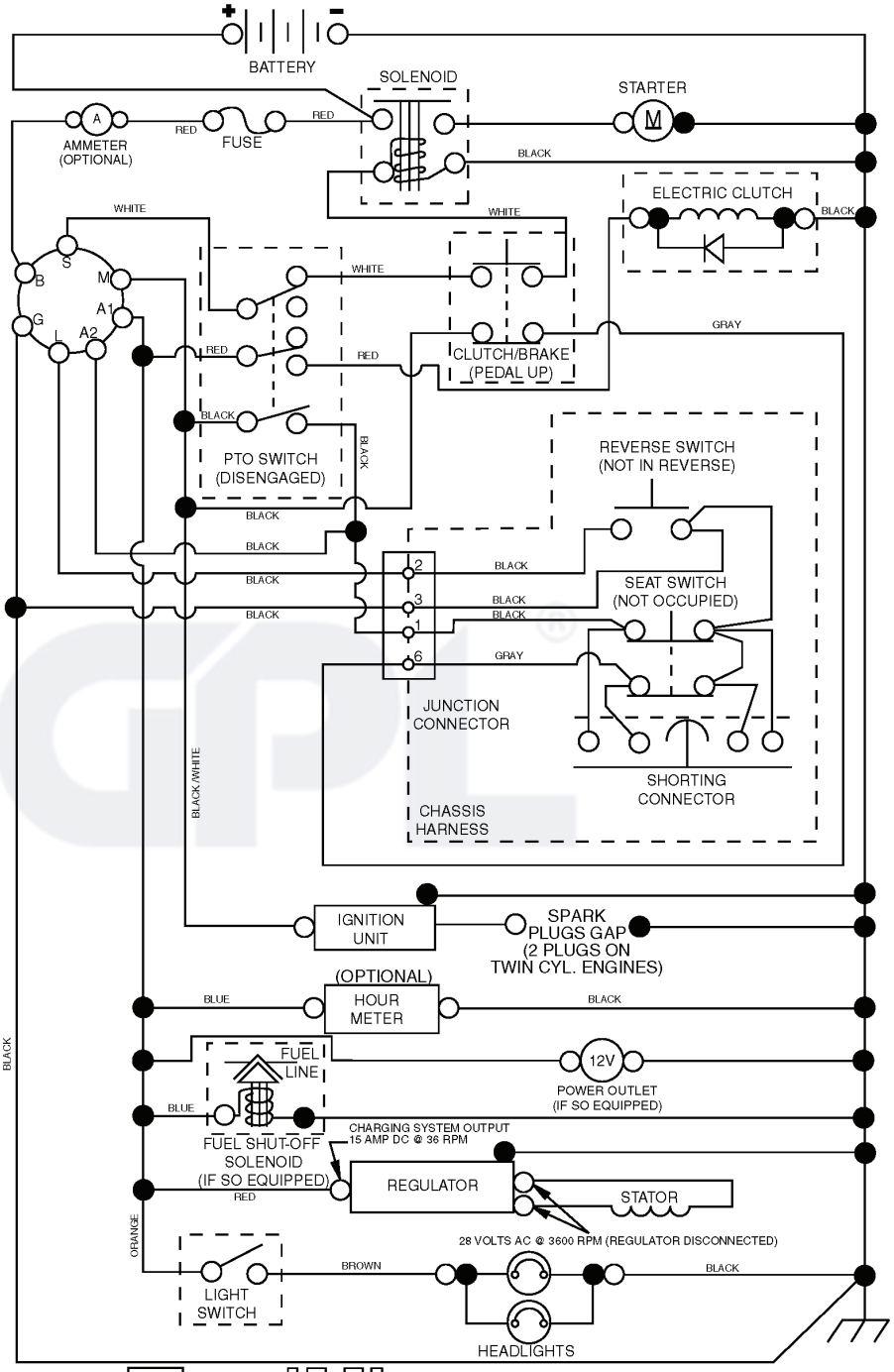

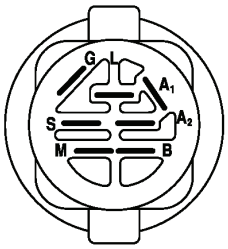

IGNITION SWITCH

POSITION	CIRCUIT "MAKE"
OFF	M+G+A1
RUN/OVERRIDE	B+A1
RUN	B+A1 L+A2
START	B + S + A1

02928

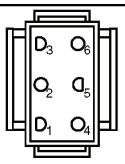

CHASSIS HARNESS CONNECTOR (MATING SIDE)

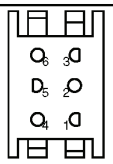

DASH HARNESS CONNECTOR (MATING SIDE)

WIRING INSULATED CLIPS

NOTE: IF WIRING INSULATED CLIPS WERE REMOVED FOR SERVICING OF UNIT, THEY SHOULD BE REPLACED TO PROPERLY SECURE YOUR WIRING.

NON-REMOVABLE CONNECTIONS

REMOVABLE CONNECTIONS

TRACTOR - MODEL NO. GTH260 XP (96041000100), PRODUCT NO. 960 41 00-01

WHEELS AND TIRES

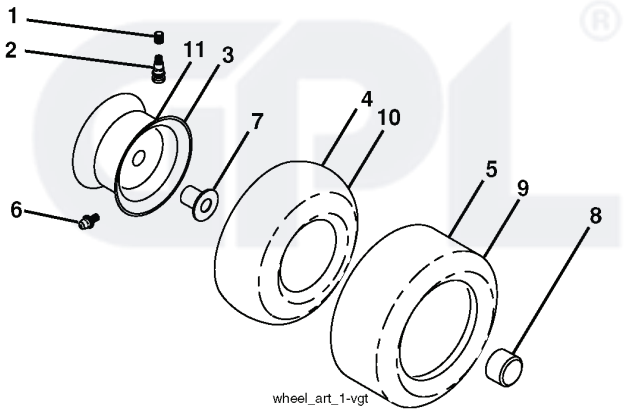

REF.	PART NO.	DESCRIPTION	REMARK	QTY.	KIT
1	532059192	CAP VALVE		1	
2	532065139	NIPPLE		1	
3	532144509	RIM SPROCKET		1	
4	532059904	HOSE		1	
5	532106230	TIRE		1	
6	532124957	FITTING		1	
7	532124959	BEARING		1	
8	532175039	HUB CAP		1	
9	532105588	TIRE		1	
10	532124926	HOSE		1	
11	532144510	WHEEL		1	
- -	532144334	SEALING FOAM		1	

TRACTOR - MODEL NO. GTH260 XP (96041000100), PRODUCT NO. 960 41 00-01

DECALS

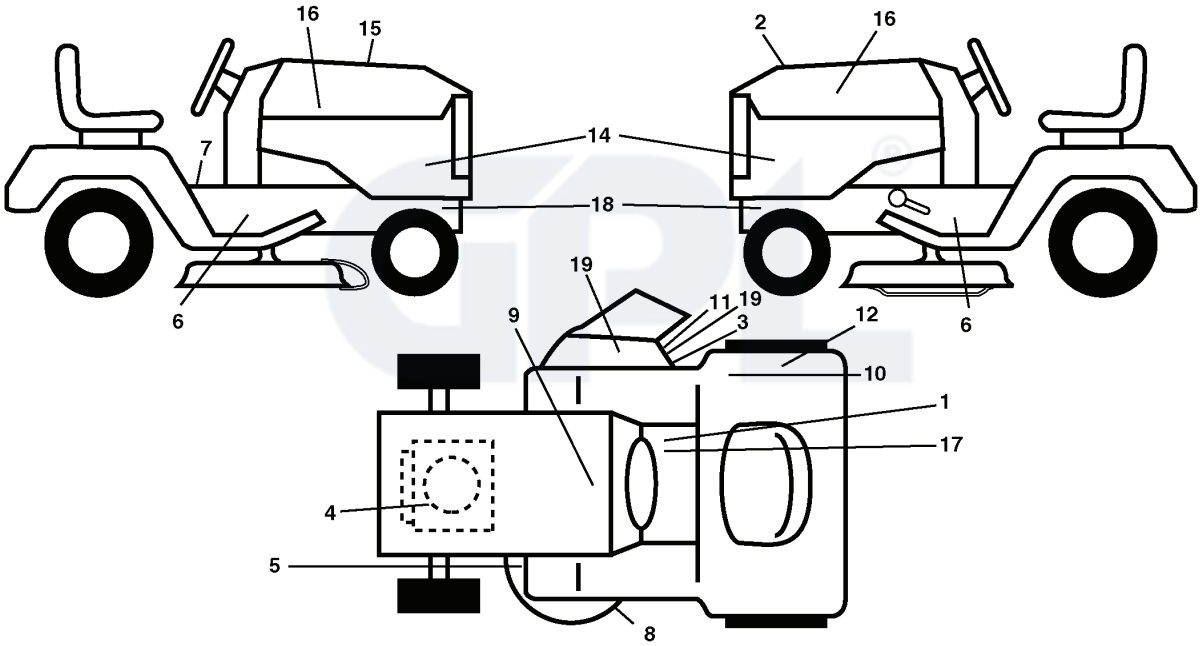

REF.	PART NO.	DESCRIPTION	REMARK	QTY.	KIT
1	532178302	DECAL		1	
2	532402128	LABEL		1	
3	532196357	DECALC."DANGER DEFLECTEUR"		1	
4	532196841	DECAL		1	
5	532159737	DECAL		1	
6	532401146	DECAL		1	
7	532400389	LABEL		1	
8	532198785	LABEL		1	
9	532145005	DECAL		1	
10	532180433	DECAL		1	
11	532182166	DECAL		1	
12	532178302	DECAL		1	
14	532403670	LABEL		1	
15	532402288	DECALC.INTERIEUR DE CAPOT		1	
16	532402832	LABEL		1	
17	532140837	DECAL		1	
18	532159736	DECAL		1	
19	532196842	DECAL		1	
- -	532162598	DECAL		1	
- -	532166960	DECAL		1	
- -	532401771	FOOTREST		1	
- -	532403773	FOOTREST		1	
- -	532402429	BED.RT GTH260XP (21.06.2006)		1	
	PART NO		REMARK		KIT