YTH21K46, 96045002600, 2010-10

SPARE PARTS LIST

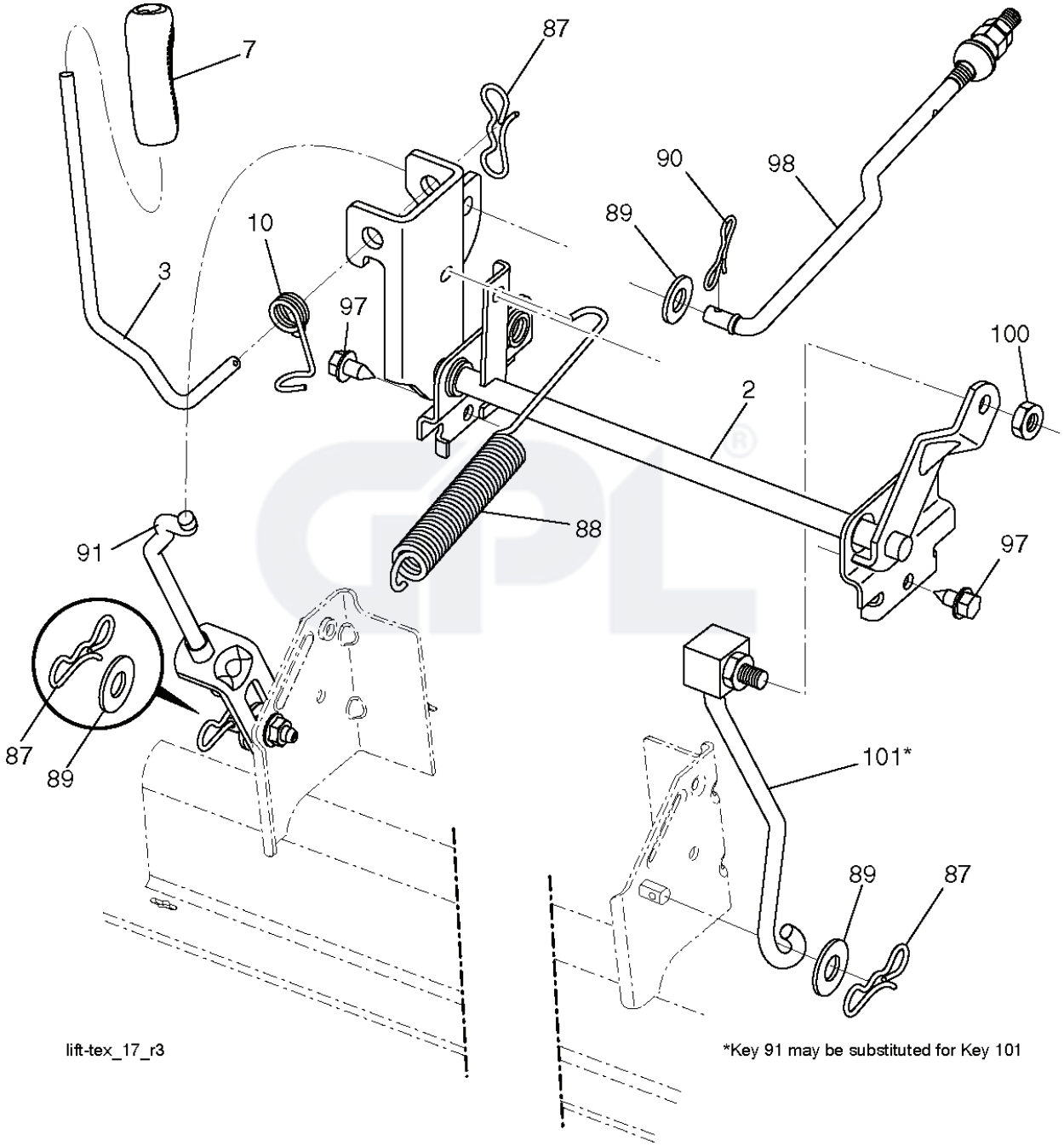
7
87
90
98
89
10
3
97
100
2
88
91
97
87
89
101*
89
87
lift-tex_17_r3
*Key 91 may be substituted for Key 101

REF.	PART NO.	DESCRIPTION	REMARK	QTY.	KIT
2	532422027	SHAFT	RH	1	
3	532195231	LEVER	RH	1	
7	532411555	GRIP		1	
10	532196314	SPRING		1	
87	532194209	SPRING		1	
88	532410710	SPRING		1	
89	819191912	WASHER		1	
90	532194208	PIN		1	
91	532195181	LINK		1	
97	817000612	SCREW		1	
98	532195270	LINK		1	
100	873930600	NUT		1	
101	532407003	LINK		1	

SCH10

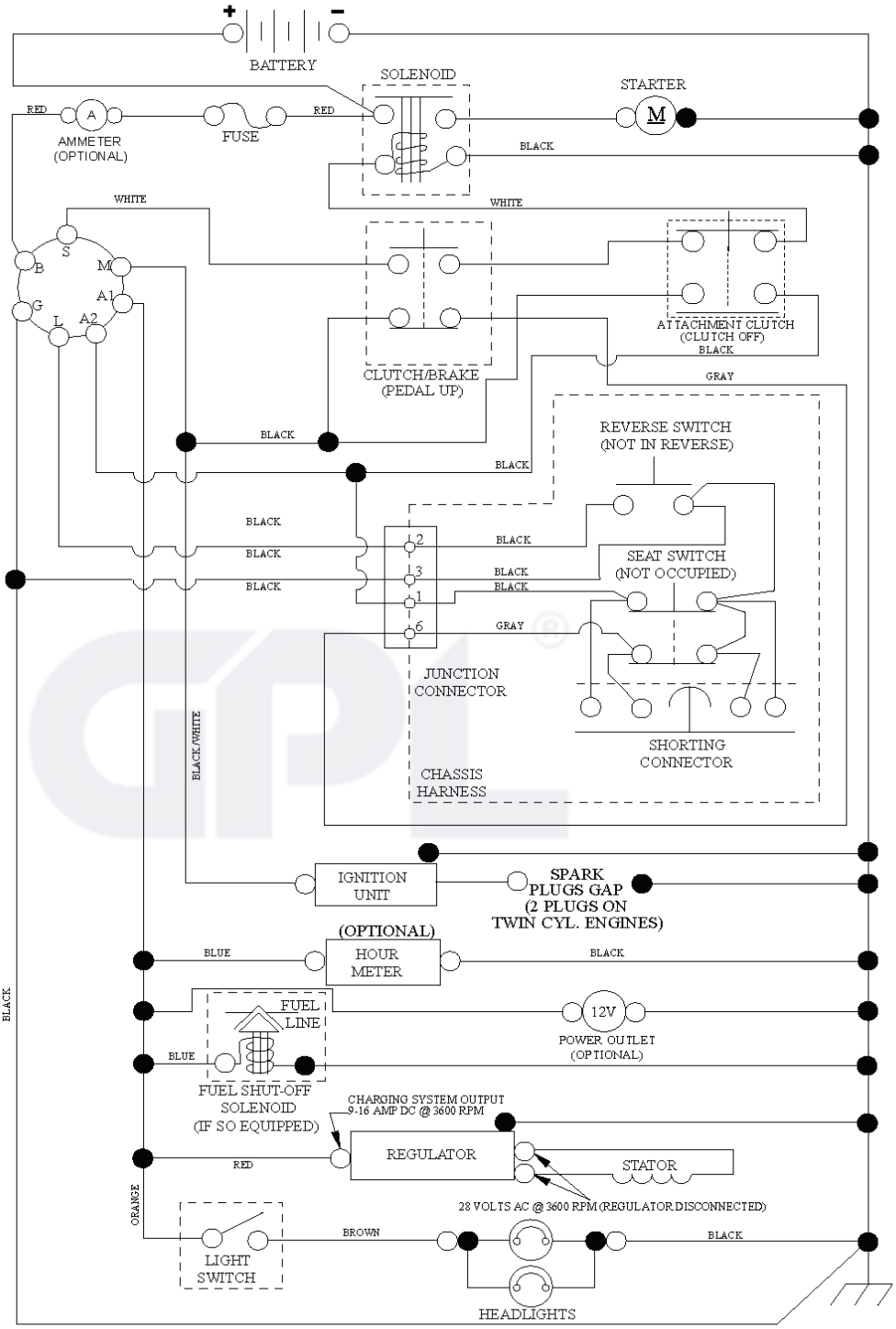

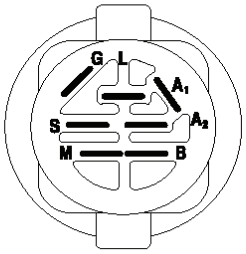

IGNITION SWITCH

POSITION	CIRCUIT "MAKE"
OFF	M+G+A1
RUN/OVERRIDE	B+A1
RUN	B+A1 L+A2
START	B + S + A1

03107

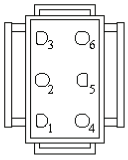

CHASSIS HARNESS CONNECTOR (MATING SIDE)

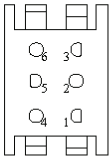

DASH HARNESS CONNECTOR (MATING SIDE)

WIRING INSULATED CLIPS
NOTE: IF WIRING INSULATED CLIPS WERE REMOVED FOR SERVICING OF UNIT, THEY SHOULD BE RE-INSTALLED TO PROPERLY SECURE YOUR WIRING.

NON-REMOVABLE CONNECTIONS

REMOVABLE CONNECTIONS

TRACTOR - - MODEL NUMBER YTH21K46 (96045002100), PRODUCT NO. 960 45 00-21
STEERING ASSEMBLY

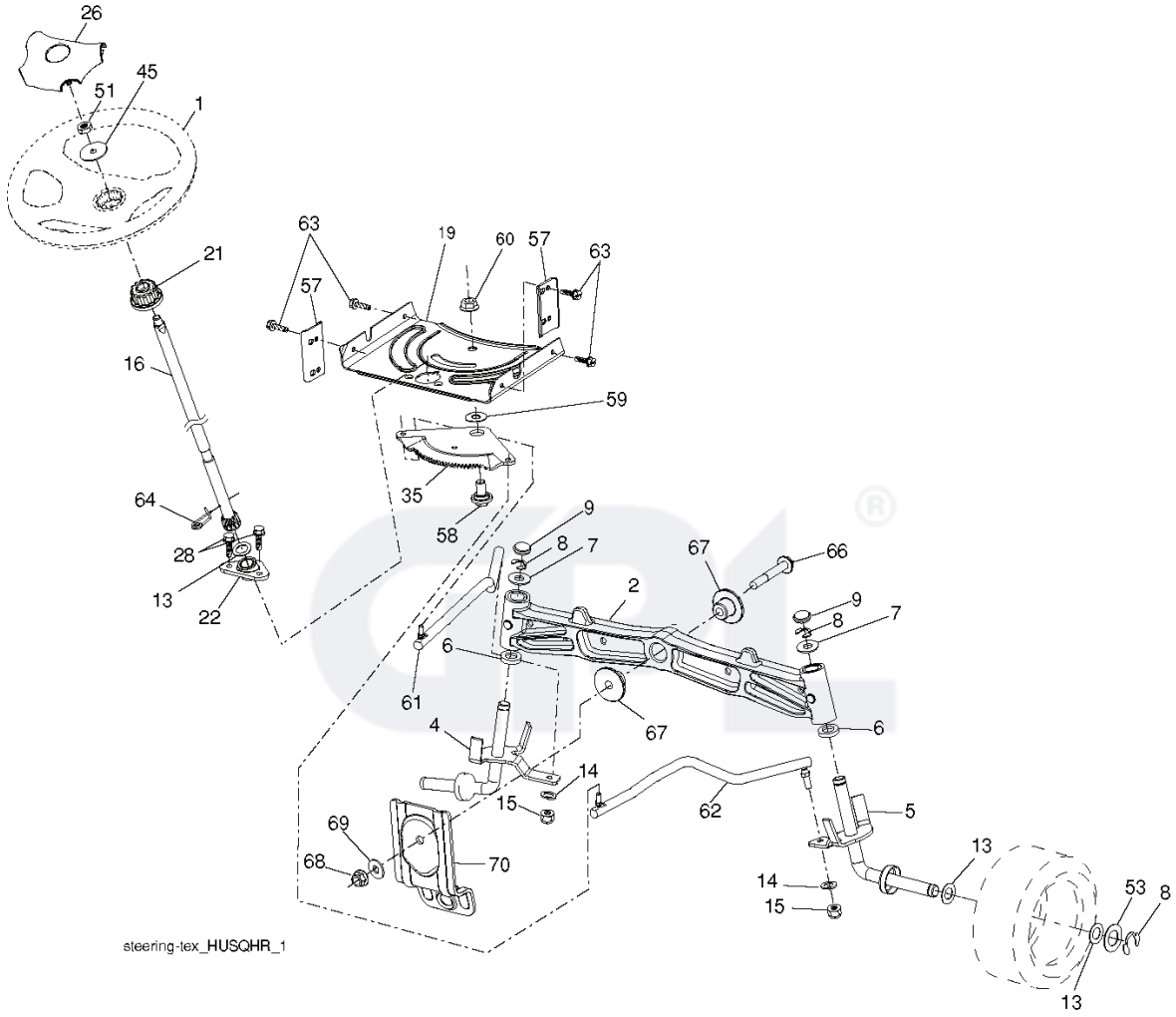

REF.	PART NO.	DESCRIPTION	REMARK	QTY.	KIT
1	532439740	STEERING WHEEL		1	
2	532195968	SHAFT		1	
4	532403087	SPINDLE	LH	1	
5	532403088	SPINDLE	RH	1	
6	532124931	WASHER		1	
7	532121748	WASHER		1	
8	812000029	RETAINER RING		1	
9	532121232	HUB CAP		1	
13	532121749	WASHER		1	
14	810040600	WASHER		1	
15	873540600	NUT		1	
16	532408219	SHAFT		1	
19	532194729	PLATE		1	
21	532186737	ADAPTER		1	
22	532420537	SUPPORT		1	
26	532439743	HUB CAP		1	
28	817000612	SCREW		1	
35	532194732	PLATE		1	
45	819183812	WASHER		1	
51	873940800	NUT		1	
53	532188967	WASHER		1	
57	532407465	BRACKET		1	
58	532194747	BOLT		1	
59	532194748	WASHER		1	
60	873971000	NUT		1	
61	532194740	LINK	LH	1	
62	532194741	LINK	RH	1	
63	817000512	SCREW		1	
64	532199849	SPRING RETAINER		1	
66	871020748	BOLT		1	
67	532194737	BUSHING		1	
68	873900700	NUT		1	
69	532199162	WASHER		1	
70	532196197	BRACKET		1	

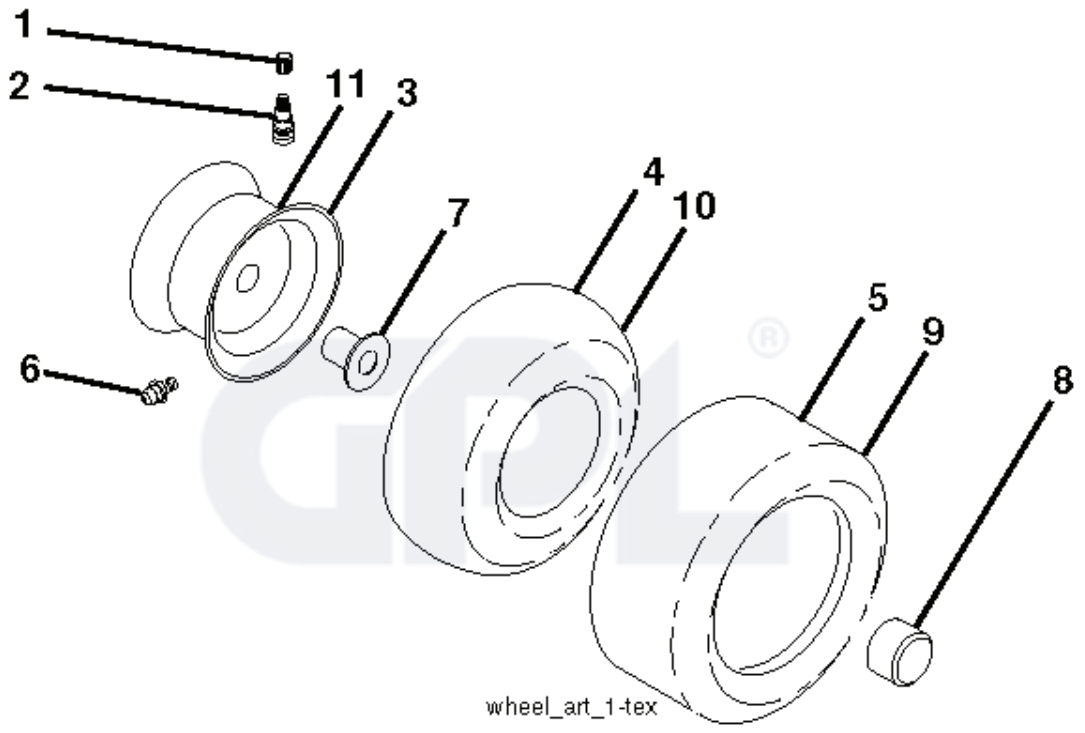
1
2
11
3
4
10
7
5
9
6
8
wheel_art_1-tex

REF.	PART NO.	DESCRIPTION	REMARK	QTY.	KIT
1	532059192	CAP VALVE		1	
2	532065139	NIPPLE		1	
3	532138336	RIM	Front	1	
4	532059904	HOSE	Front (Service Item Only)	1	
5	532106222	TIRE	Front 15 x 6.0–6	1	
6	532124957	FITTING	(Front Wheel Only)	1	
7	532124959	BEARING	(Front Wheel Only)	1	
8	532175039	HUB CAP		1	
9	532138468	TIRE	Rear 20 x 8–8	1	
10	532124926	HOSE	Rear (Service Item Only)	1	
11	532138337	RIM SPROCKET	Rear 8"	1	
- -	532144334	SEALING FOAM		1	

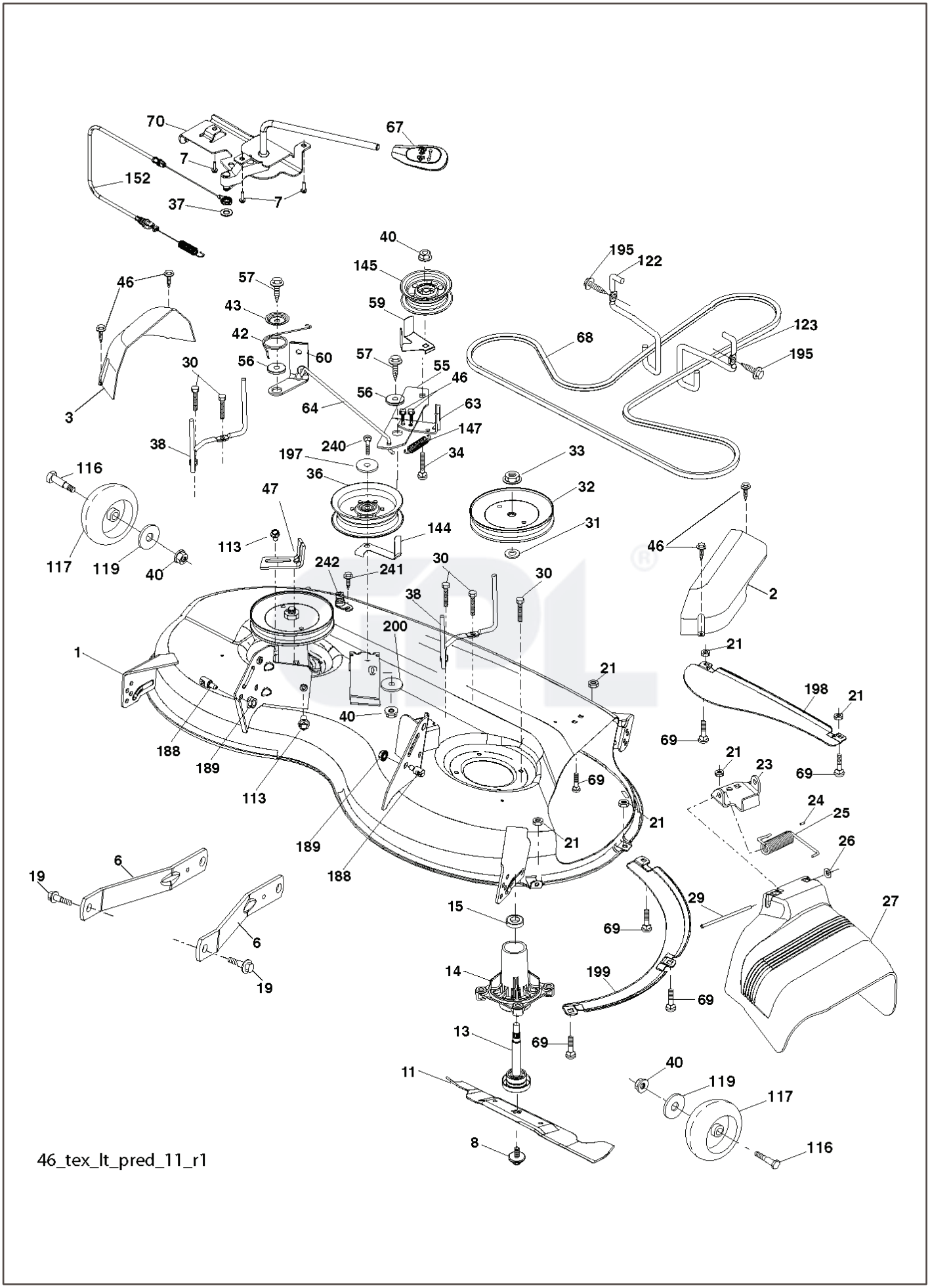
70
67
7
152
37
7
40
195
122
145
46
57
43
59
123
42
68
195
30
56
60
57
55
46
56
64
63
3
147
38
240
34
197
33
116
36
32
47
144
31
113
46
117
119
40
242
241
30
30
2
38
200
1
21
21
198
21
40
69
188
189
21
23
69
69
113
24
25
21
21
189
26
6
19
188
29
27
15
69
6
19
14
199
69
13
69
40
11
119
117
8
116
46_tex_lt_pred_11_r1

REF.	PART NO.	DESCRIPTION	REMARK	QTY.	KIT
1	532442382	CUTTING DECK		1	
2	532405506	COVER	LH	1	
3	532405507	COVER	RH	1	
6	532195186	ARM		1	
7	532416358	SCREW		1	
8	532193003	SCREW		1	
11	532405380	RIDE ON BLADE		1	
13	532192872	SHAFT ASSY		1	
14	532187281	BEARING HOUSING		1	
15	532110485	BEARING		1	
19	532196539	BOLT		1	
21	873680500	NUT		1	
23	532192557	HINGE		1	
24	532105304	HUB CAP		1	
25	532197026	TORSION SPRING		1	
26	532110452	NUT		1	
27	532405357	DEFLECTOR		1	
29	532131491	SHAFT		1	
30	532173984	SCREW		1	
31	532187690	WASHER		1	
32	532197473	PULLEY		1	
33	532400234	NUT		1	
34	872110612	BOLT		1	
36	532197379	PULLEY		1	
37	819131316	WASHER		1	
38	532432520	KEEPER		1	
40	873900600	NUT		1	
42	532198410	SPRING		1	
43	532197256	SPRING		1	
46	532137729	SCREW		1	
47	532197250	BRACKET		1	
55	532197249	ARM		1	
56	532199092	SPACER		1	
57	817000616	SCREW		1	
59	532141043	GUARD	94	1	
60	532199471	ARM	LH	1	
63	532199477	ARM		1	
64	532405138	LINKAGE.ASM.BRAKE.RAW *SUBS/2*		1	
67	532403012	HANDLE		1	
68	532405143	BELT		1	
69	872140505	BOLT		1	
70	532406563	CLUTCH		1	
113	817000510	BOLT		1	
116	532193406	BOLT		1	
117	532174873	WHEEL		1	
119	819132012	WASHER		1	
122	532197258	BELT GUIDE	LH	1	
123	532197259	BELT GUIDE	RH	1	
144	532199204	BELT GUIDE		1	
145	532193197	PULLEY		1	
147	532401872	SPRING		1	
152	532435110	CABLE		1	
188	532195161	STUD		1	
189	873900500	NUT		1	
195	817000612	SCREW		1	
197	819131312	WASHER		1	
198	532403149	PLATE		1	
199	532403150	PLATE	RH	1	
200	532413524	WASHER		1	
240	874520636	BOLT		1	
241	532152927	SCREW		1	
242	532415598	HOSE COUPLING		1	
- -	532416405	COUPLING		1	
- -	532192870	SPINDLE		1	
- -	532439672	DECK		1	

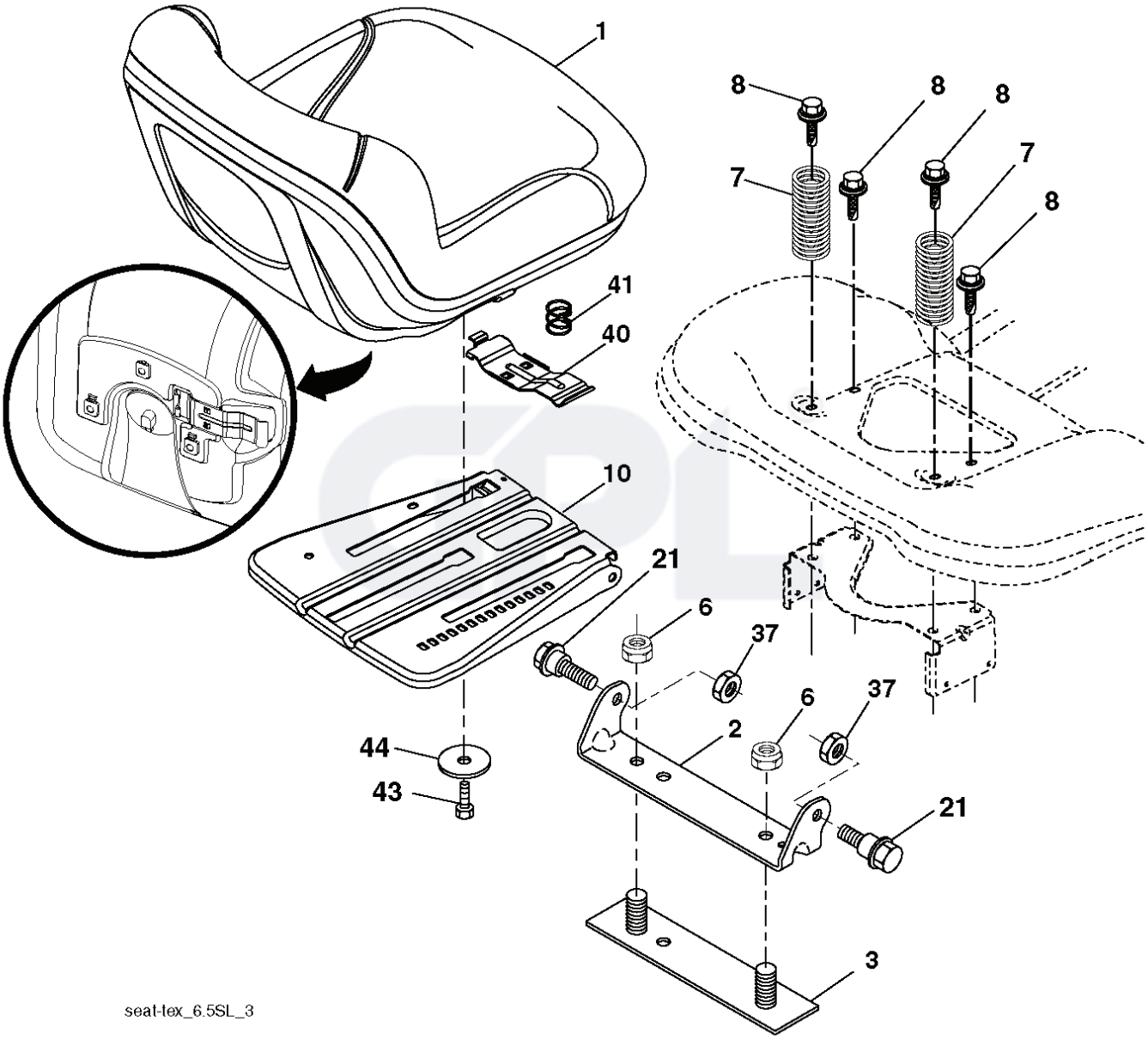
1
8
8
8
7
7
8
41
40
10
21
6
37
6
37
2
44
43
21
3
seat-tex_6.5SL_3

REF.	PART NO.	DESCRIPTION	REMARK	QTY.	KIT
1	532424068	SEAT		1	
2	532180166	BRACKET		1	
3	532140675	STRAP		1	
6	873800600	NUT		1	
7	532124181	SPRING		1	
8	532171877	BOLT		1	
10	532196977	PLATE		1	
21	532171852	BOLT		1	
37	873800500	LOCK NUT		1	
40	532197661	HANDLE		1	
41	532198200	SPRING		1	
43	874760612	BOLT		1	
44	819133812	WASHER		1	

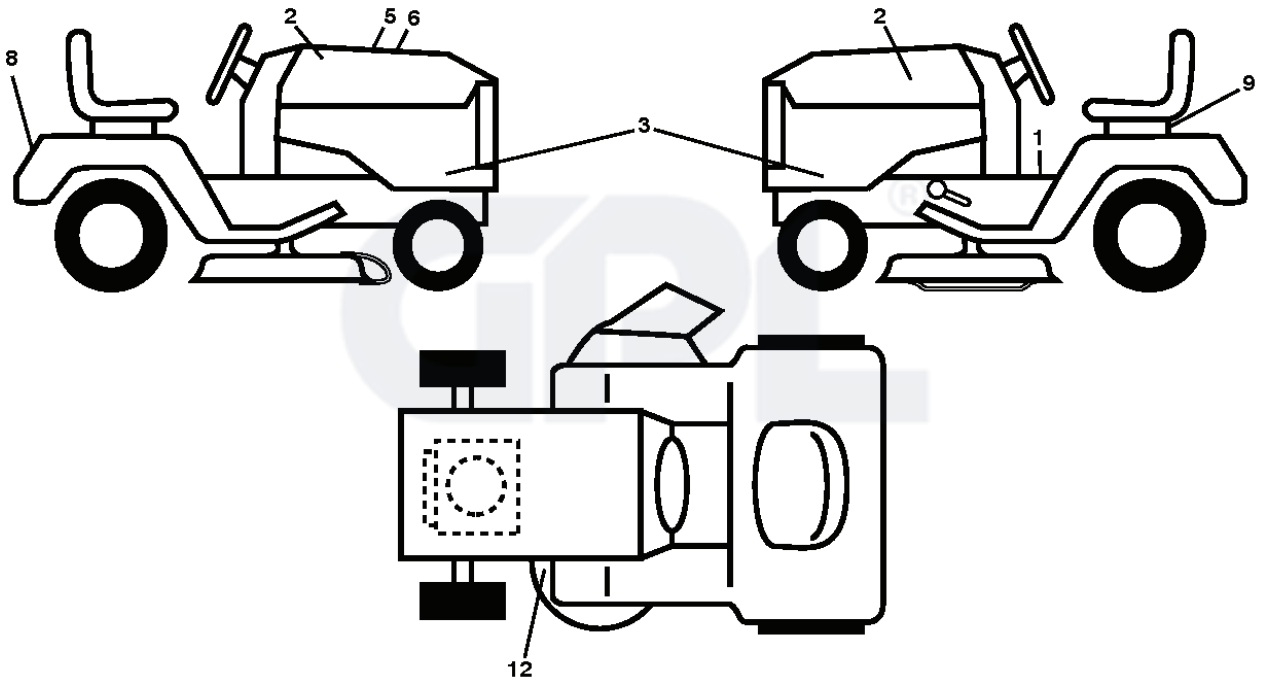
2
5
6
8
3
2
9
1
12

REF.	PART NO.	DESCRIPTION	REMARK	QTY.	KIT
1	532419138	DECAL		1	
2	581627301	DECAL		1	
3	532439567	DECAL		1	
5	532423829	DECAL		1	
6	532439606	DECAL		1	
8	532191554	DECAL		1	
9	532145005	DECAL		1	
12	532160396	DECAL		1	
- -	532166960	DECAL		1	
- -	532439681	PLATE		1	
- -	532439682	PAD		1	

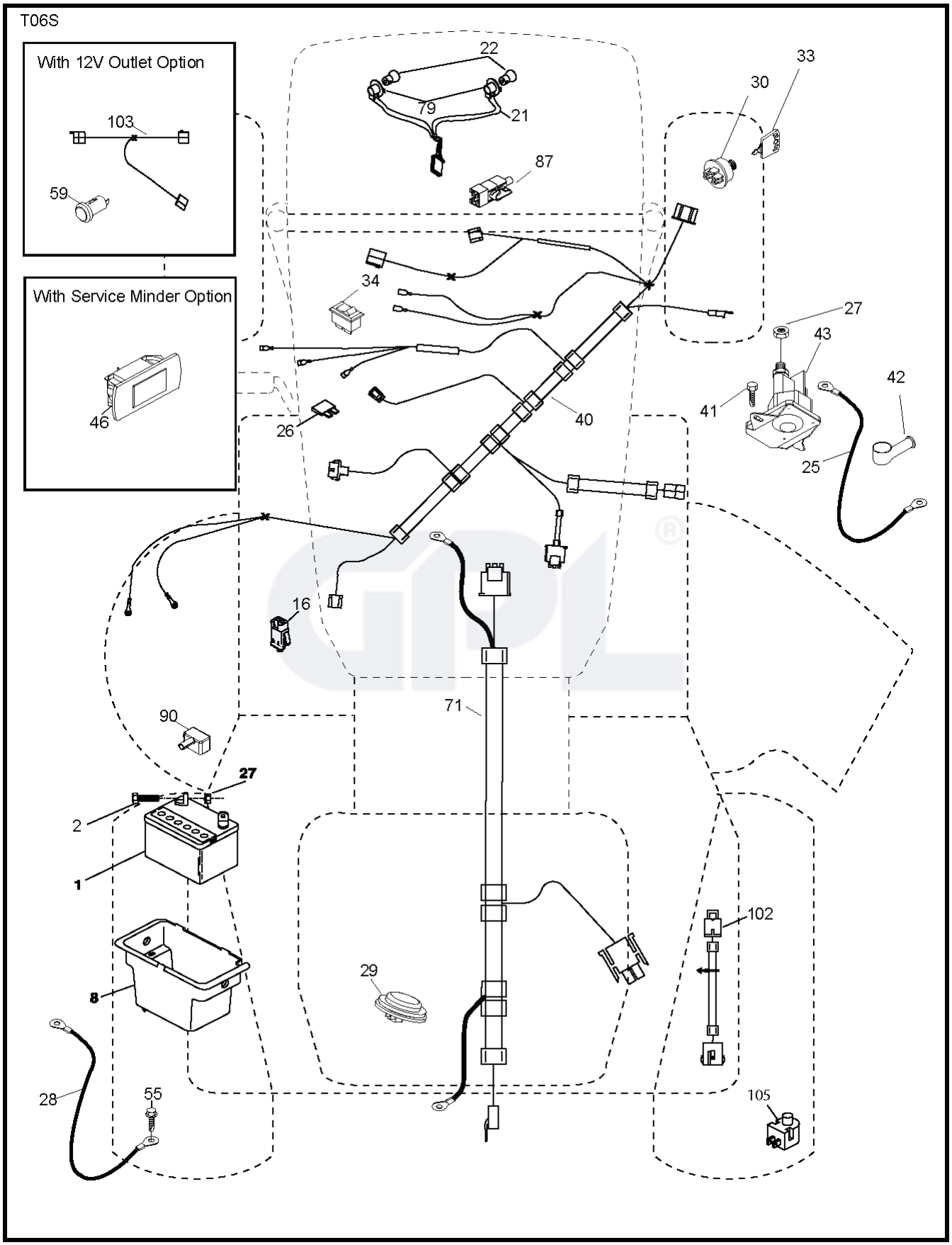
T06S
With 12V Outlet Option
103
59
With Service Minder Option
46
22
79
21
87
33
30
34
27
43
42
41
40
26
25
16
71
90
27
2
1
102
29
8
28
55
105

REF.	PART NO.	DESCRIPTION	REMARK	QTY.	KIT
1	532163465	BATTERY		1	
2	874760412	BOLT		1	
8	532193228	BOX		1	
16	532176138	MICRO SWITCH		1	
21	532400252	HARNESS		1	
22	532004152	BULB		1	
25	532412895	CABLE.STARTER.6G.BL/RE*SUBS/2*		1	
26	532175158	FUSE		1	
27	873510400	NUT		1	
28	532198885	CABLE		1	
29	532401545	SWITCH		1	
30	532193350	IGNITION MODULE		1	
33	532411933	KEY		1	
34	532110712	SWITCH		1	
40	532401098	CABLE		1	
41	817720408	SCREW		1	
42	532131563	COVER		1	
43	532192507	SOLENOID		1	
46	532401763	DISPLAY		1	
55	817060512	SCREW		1	
71	532400449	CABLE		1	
79	532175242	HOLDER		1	
87	532197802	SWITCH		1	
90	532435395	TERMINAL COVER		1	
102	532404454	CABLE		1	
105	532407568	SWITCH		1	

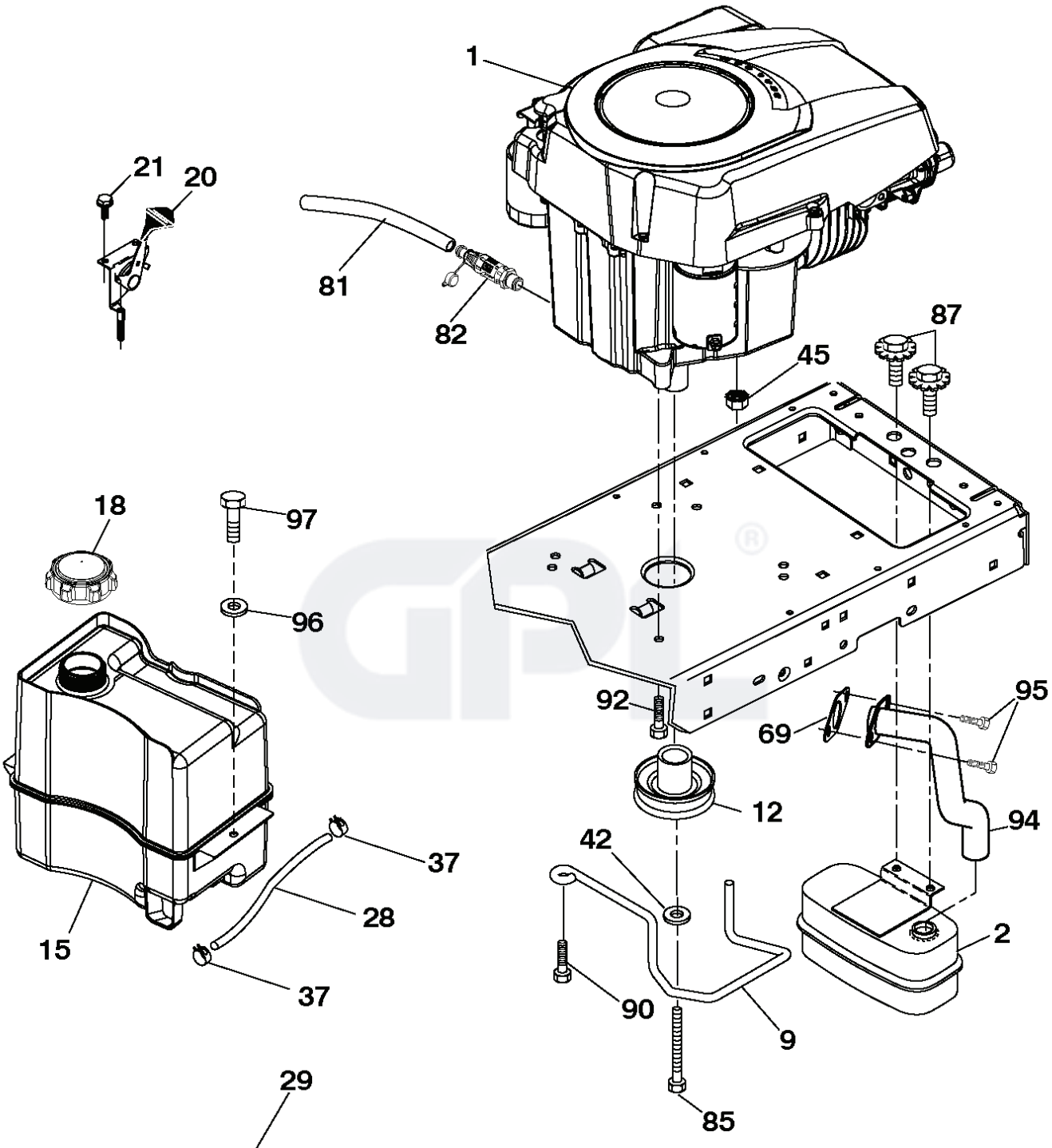

SPARK ARRESTER KIT

engine-tex_Kohl_29

REF.	PART NO.	DESCRIPTION	REMARK	QTY.	KIT
1	000000000	W/O DESCRIPTION	KOHLER MODEL NO. SV610-0212	1	
2	532188655	MUFFLER		1	
9	532194320	BELT GUIDE		1	
12	532405472	PULLEY		1	
15	532407489	TANK FUEL		1	
18	532430220	FUEL CAP		1	
20	532401508	THROTTLE CONTROL		1	
21	532416358	SCREW		1	
28	532401137	DURITE ESSENCE 20"		1	
29	532137180	SPARK ARRESTER KIT		1	
37	532123487	HOSE CLAMP		1	
42	810040700	WASHER		1	
45	873510400	NUT		1	
69	532185909	GASKET		1	
81	532148456	TUBE		1	
82	532428287	PLUG		1	
85	532173937	BOLT		1	
87	537171877	BOLT		1	
90	817000616	SCREW		1	
92	817120616	SCREW		1	
94	532188654	TUBE EXHAUST		1	
95	532192334	SCREW		1	
96	819091416	WASHER		1	
97	817670412	SCREW		1	

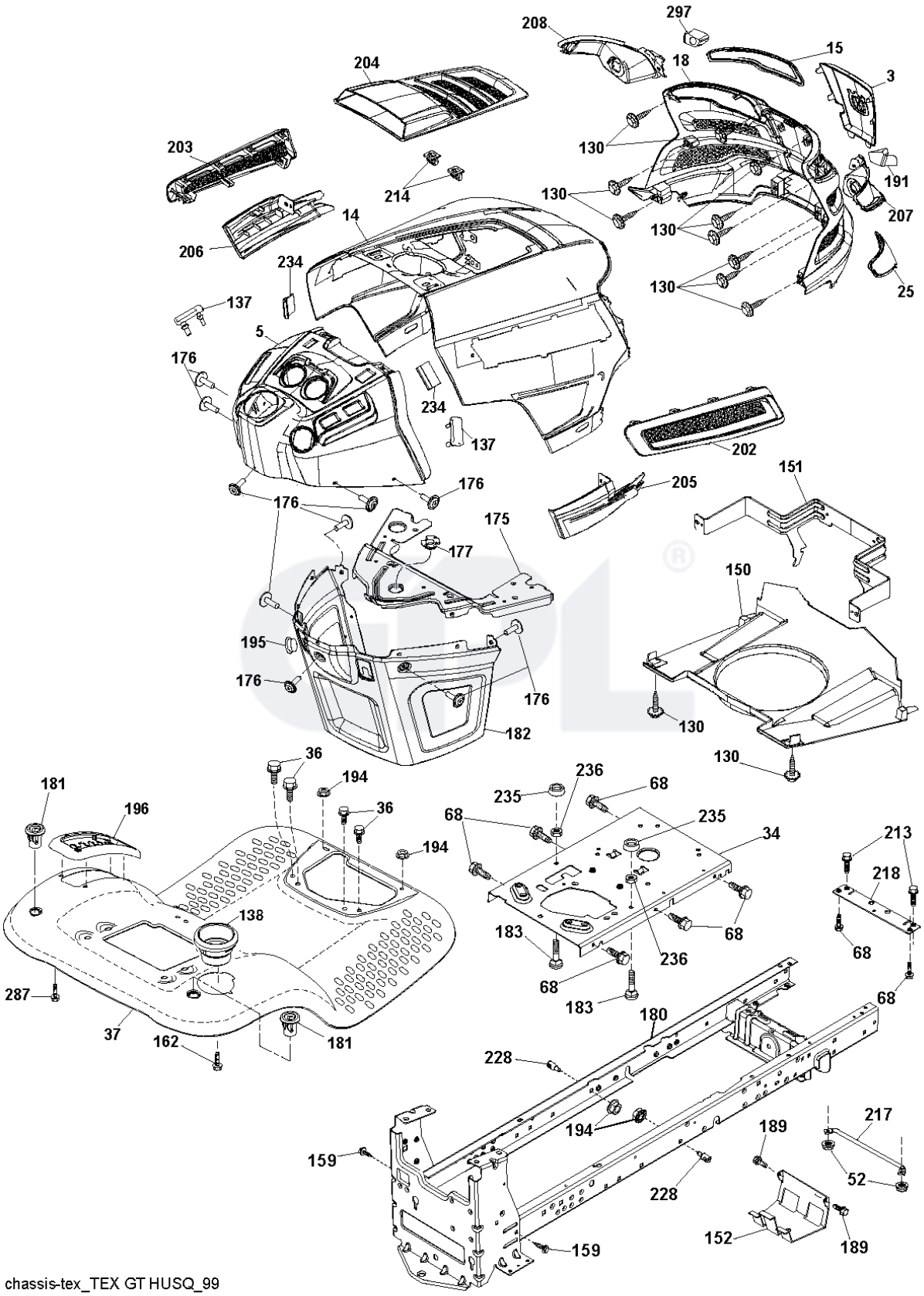

chassis-tex_TEX GT HUSQ_99

REF.	PART NO.	DESCRIPTION	REMARK	QTY.	KIT
3	532444481	LOGOTYPE		1	
5	532437473	DASH		1	
14	532441177	HOOD		1	
15	532439733	LENS	LH	1	
18	532440653	GRILLE		1	
25	532439732	LENS	RH	1	
34	532196125	PLATE		1	
36	817060512	SCREW		1	
37	532441206	FENDER		1	
52	873680500	NUT		1	
68	817490508	SCREW		1	
130	532416358	SCREW		1	
137	532407590	DAMPING PIECE		1	
138	532439747	HOLDER		1	
150	532439731	AIR DUCT		1	
151	532436670	BRACKET		1	
152	532199535	SHIELD		1	
159	817000612	SCREW		1	
162	532142432	SCREW		1	
175	532196304	SUPPORT		1	
176	532400776	SCREW		1	
177	532195227	BUSHING		1	
180	532195457	CHASSIS		1	
181	532439746	BUSHING		1	
182	532406859	DASH		1	
183	874520520	BOLT		1	
189	817000512	SCREW		1	
191	532437455	INSERT		1	
194	873900500	NUT		1	
195	532404137	TROU*RPL.PAR 532401556428		1	
196	532439647	CONSOLE		1	
202	532439728	COVER	RH	1	
203	532439727	COVER	LH	1	
204	532435714	COVER		1	
205	532439730	SKIRT	RH	1	
206	532439729	SKIRT	LH	1	
207	532439734	CUP	RH	1	
208	532439735	CUP	LH	1	
213	874760512	BOLT		1	
214	532199145	CLIP		1	
217	532409167	ROD		1	
218	532196395	PLATE		1	
228	532195161	STUD		1	
234	532404742	DAMPING PIECE		1	
235	532406129	SPACER		1	
236	873930500	NUT		1	
287	817600406	SCREW		1	
297	532437456	INSERT		1	

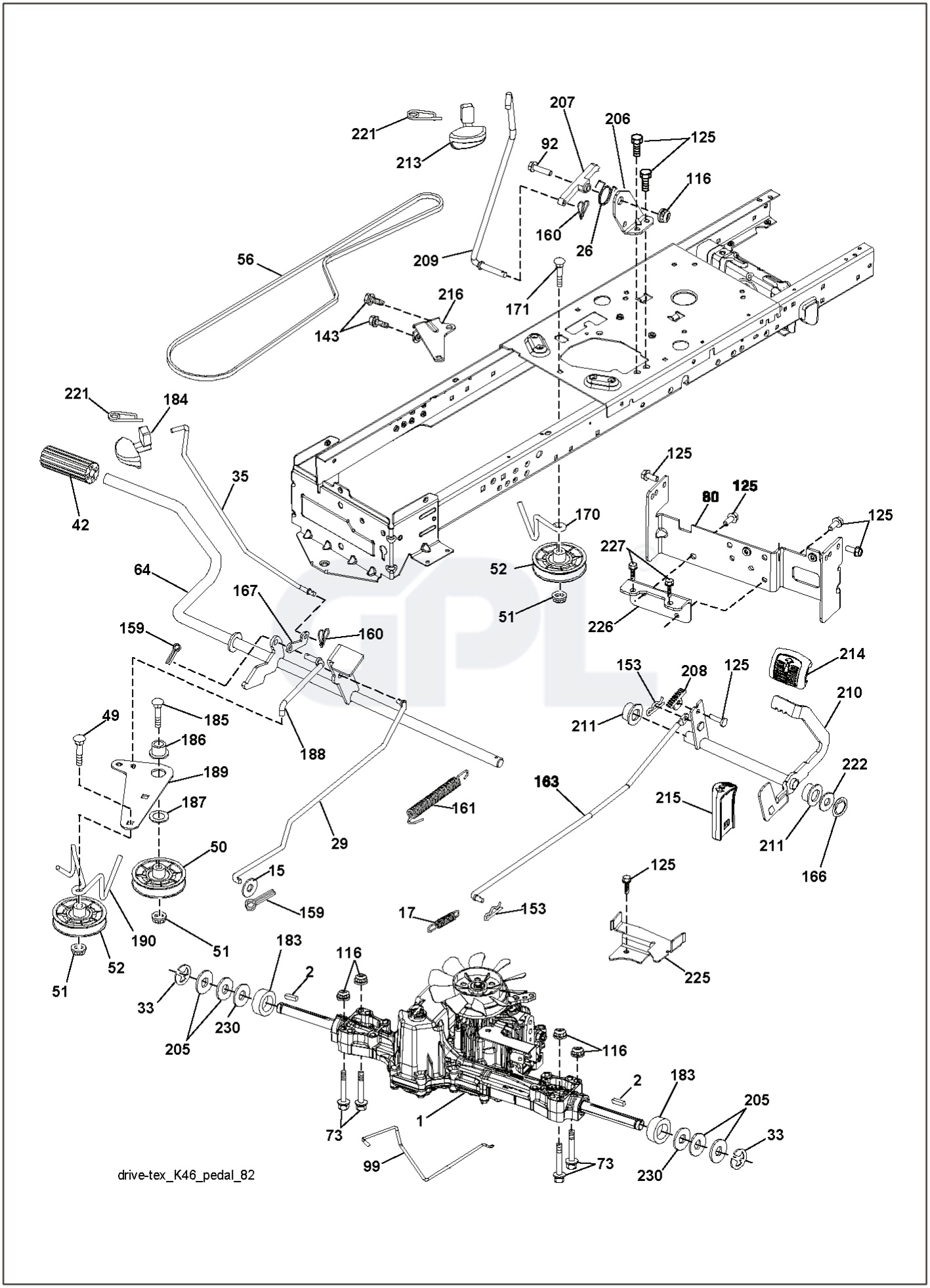
221
213
207
206
125
92
116
160
26
209
56
171
216
143
221
184
42
35
125
80
125
125
170
227
52
64
167
51
226
159
160
153
208
125
214
210
49
185
211
186
188
189
222
163
187
161
215
211
50
29
166
15
125
159
17
153
190
51
183
116
52
2
225
51
33
205
230
116
2
183
205
1
73
33
99
73
230
drive-tex_K46_pedal_82

REF.	PART NO.	DESCRIPTION	REMARK	QTY.	KIT
1	000000000	W/O DESCRIPTION	TRANSAXLE TUFFTORQ K46BT	1	
2	532123583	KEY		1	
15	819131316	WASHER		1	
17	532413678	SRPING.BRAKE.K46.GREEN*SUBS/2*		1	
26	532199679	SPRING		1	
29	532403806	ROD		1	
33	812000001	RETAINER RING		1	
35	583864501	ROD		1	
42	532124872	PEDAL RUBBER		1	
49	872110614	BOLT		1	
50	532194327	PULLEY		1	
51	873900600	NUT		1	
52	532194326	PULLEY		1	
56	532130969	BELT		1	
64	532197865	SHAFT		1	
73	874490540	BOLT		1	
80	532410024	STRAP TORQUE		1	
92	874760520	BOLT		1	
99	532415742	ROD		1	
116	873900500	NUT		1	
125	817000512	SCREW		1	
143	817490508	SCREW		1	
153	532124788	RETAINER RING		1	
159	876020412	SPLIT PIN		1	
160	532169484	PIN		1	
161	532105709	SPRING		1	
163	532448275	CONTROL		1	
166	532429164	NUT		1	
167	532405257	LATCH		1	
170	532194322	KEEPER		1	
171	872110616	BOLT		1	
183	532137057	SPACER		1	
184	532403118	CONTROL		1	
185	872110622	BOLT		1	
186	532194321	SPACER		1	
187	819133210	WASHER		1	
188	532194323	LINK		1	
189	532194317	PLATE		1	
190	532194318	BELT GUIDE		1	
205	532121748	WASHER		1	
206	532197867	BRACKET		1	
207	532197868	LATCH		1	
208	532197869	SUPPORT		1	
209	532199592	ROD		1	
210	532197860	ARM		1	
211	532120183	BEARING		1	
213	532403119	CONTROL		1	
214	532421263	PAD		1	
215	532401723	PEDAL		1	
216	532196131	BRACKET		1	
221	532403187	SPRING		1	
222	879212010	WASHER		1	
225	532403319	BELT GUIDE		1	
226	532401564	BRACKET		1	
227	817490512	SCREW		1	
230	532188967	WASHER		1	
	PART NO		REMARK		KIT