YTH2648 TDRF, 96041026401 2012-02

SPARE PARTS LIST

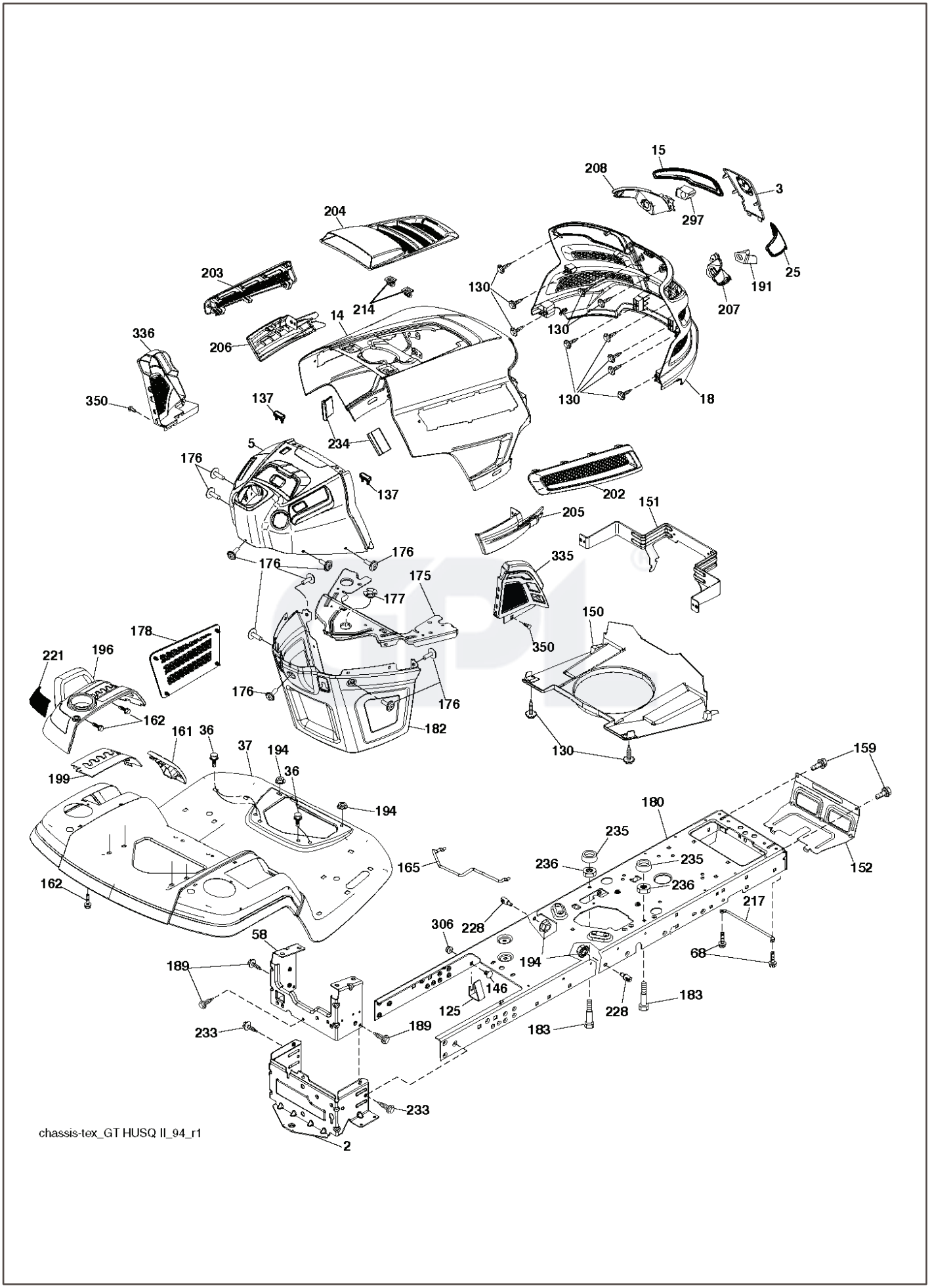
15
208
3
297
204
25
191
203
130
214
207
14
130
336
206
130
18
350
137
234
5
176
137
202
151
205
176
335
176
175
177
150
178
350
221
196
176
176
162
161
36
182
37
194
130
159
199
36
194
180
235
165
236
235
152
162
236
217
306
228
58
194
68
189
146
125
183
228
233
189
183
233
2
chassis-tex_GT HUSQ II_94_r1

REF.	PART NO.	DESCRIPTION	REMARK	QTY.	KIT
2	532412282	PLATE		1	
3	532444481	LOGOTYPE		1	
5	532437486	DASH		1	
14	532441177	HOOD		1	
15	532439733	LENS		1	
18	532440653	GRILLE		1	
25	532443385	LENS		1	
36	817060512	SCREW		1	
37	532441208	FENDER		1	
58	532412281	PLATE		1	
68	817490508	SCREW		1	
125	581684801	CLIP		1	
130	532416358	SCREW		1	
137	532407590	DAMPING PIECE		1	
146	581857901	BOLT		1	
150	532439774	AIR DUCT		1	
151	532436670	BRACKET		1	
152	532436086	SHIELD		1	
159	817000612	SCREW		1	
161	532439929	CONSOLE		1	
162	532142432	SCREW		1	
165	532194330	SUPPORT		1	
175	532196304	SUPPORT		1	
176	532400776	SCREW		1	
177	532195227	BUSHING		1	
178	532199782	NET		1	
180	532445559	CHASSIS		1	
182	532406859	DASH		1	
183	874520520	BOLT		1	
189	817000512	SCREW		1	
191	532437455	INSERT		1	
194	873900500	NUT		1	
196	532439674	CONSOLE		1	
199	532198259	PLATE		1	
202	532439728	COVER		1	
203	532439727	COVER		1	
204	532435714	COVER		1	
205	532439730	SKIRT		1	
206	532439729	SKIRT		1	
207	532439734	CUP		1	
208	532439735	CUP		1	
214	532199145	CLIP		1	
217	532409167	ROD		1	
221	532198909	LENS		1	
228	532195161	STUD		1	
233	532196539	BOLT		1	
234	532404742	DAMPING PIECE		1	
235	532406129	SPACER		1	
236	873930500	NUT		1	
297	532437456	INSERT		1	
306	873900600	NUT		1	
335	532448204	COVER		1	
336	532445309	COVER		1	
350	532445143	CLIP		1	
- -	532424918	GUARD KIT ASSEMBLY-BRUSH		1	

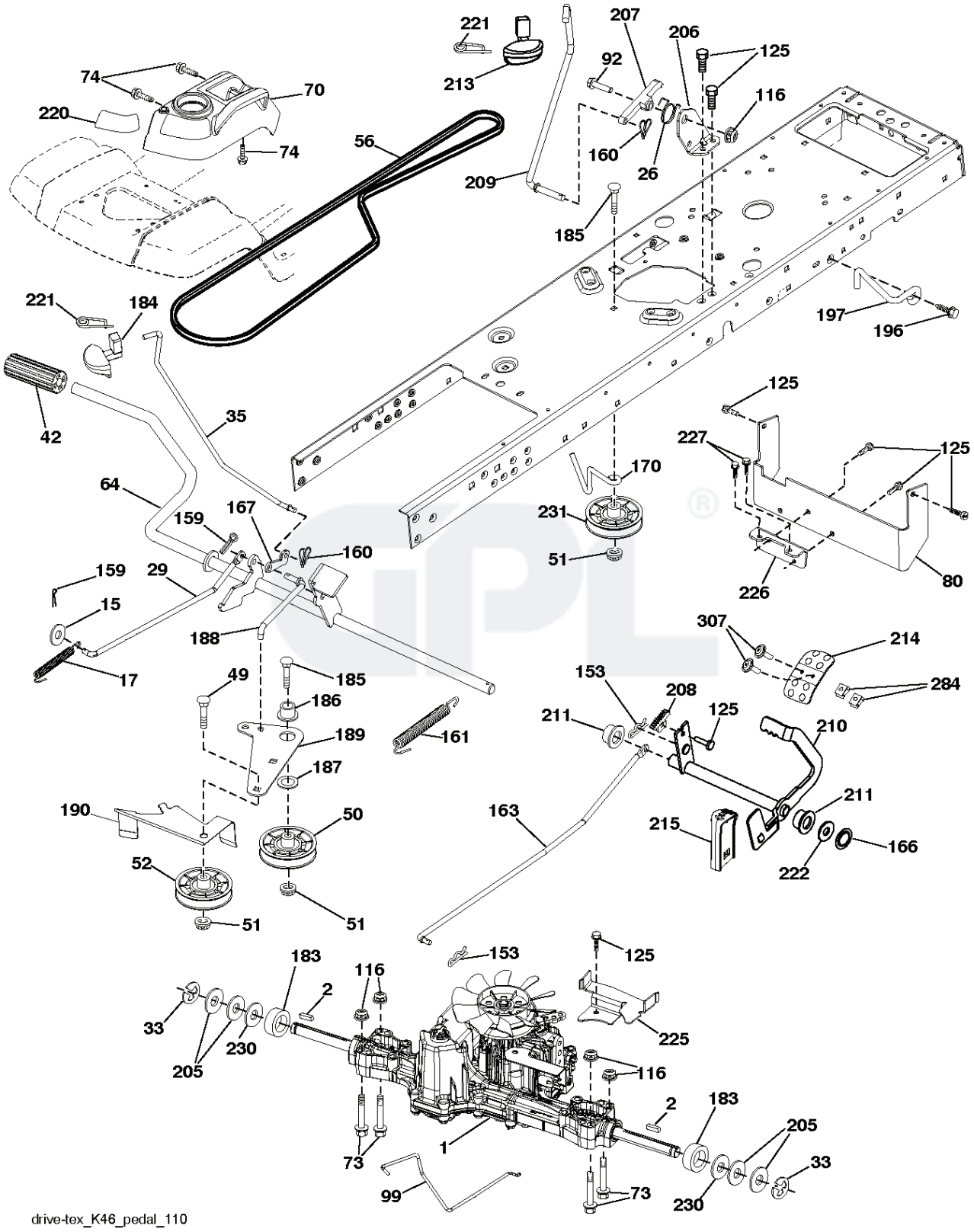
221
207
206
125
92
74
70
213
116
220
74
56
160
26
209
185
221
184
197
196
125
42
35
227
125
170
64
231
159
167
160
51
159
29
226
80
15
188
307
214
17
49
185
153
208
284
186
211
125
189
161
210
187
211
190
50
163
215
166
52
222
51
51
153
125
183
116
2
33
225
205
230
116
2
183
205
1
73
33
99
73
230
drive-tex_K46_pedal_110

REF.	PART NO.	DESCRIPTION	REMARK	QTY.	KIT
1	000000000	W/O DESCRIPTION	Transaxle, TUFFTORQ K46CR(426121)	1	
2	532123583	KEY		1	
15	819131316	WASHER		1	
17	532413678	SRPING.BRAKE.K46.GREEN*SUBS/2*		1	
26	532199679	SPRING		1	
29	532403806	ROD		1	
33	812000001	RETAINER RING		1	
35	583864501	ROD		1	
42	532124872	PEDAL RUBBER		1	
49	872110614	BOLT		1	
50	532194327	PULLEY		1	
51	873900600	NUT		1	
52	532194326	PULLEY		1	
56	532130969	BELT		1	
64	532197865	SHAFT		1	
70	532439661	CONSOLE		1	
73	874490544	SCREW		1	
74	532142432	SCREW		1	
80	532440619	STRAP		1	
92	874760520	BOLT		1	
99	532415742	ROD		1	
116	873900500	NUT		1	
125	817000512	SCREW		1	
153	532124788	RETAINER RING		1	
159	876020412	SPLIT PIN		1	
160	532169484	PIN		1	
161	532105709	SPRING		1	
163	532448275	CONTROL		1	
166	532429164	NUT		1	
167	532405257	LATCH		1	
170	532413430	BELT GUIDE		1	
183	532137057	SPACER		1	
184	532441455	HANDLE		1	
185	872110622	BOLT		1	
186	532194321	SPACER		1	
187	819133210	WASHER		1	
188	532194323	LINK		1	
189	532194317	PLATE		1	
190	532194318	BELT GUIDE		1	
196	817000616	SCREW		1	
197	532195804	BRACKET		1	
205	532121748	WASHER		1	
206	532197867	BRACKET		1	
207	532197868	LATCH		1	
208	532197869	SUPPORT		1	
209	532199592	ROD		1	
210	532197860	ARM		1	
211	532120183	BEARING		1	
213	532403119	CONTROL		1	
214	532416863	PEDAL.FORWARD.HUSQVARNA.DEALER		1	
215	532401723	PEDAL		1	
220	532198908	LENS		1	
221	532403187	SPRING		1	
222	879212010	WASHER		1	
225	532403319	BELT GUIDE		1	
226	532401564	BRACKET		1	
227	817490512	SCREW		1	
230	532188967	WASHER		1	
231	532407287	PULLEY		1	
284	532417693	NUT		1	
307	874180412	SCREW		1	

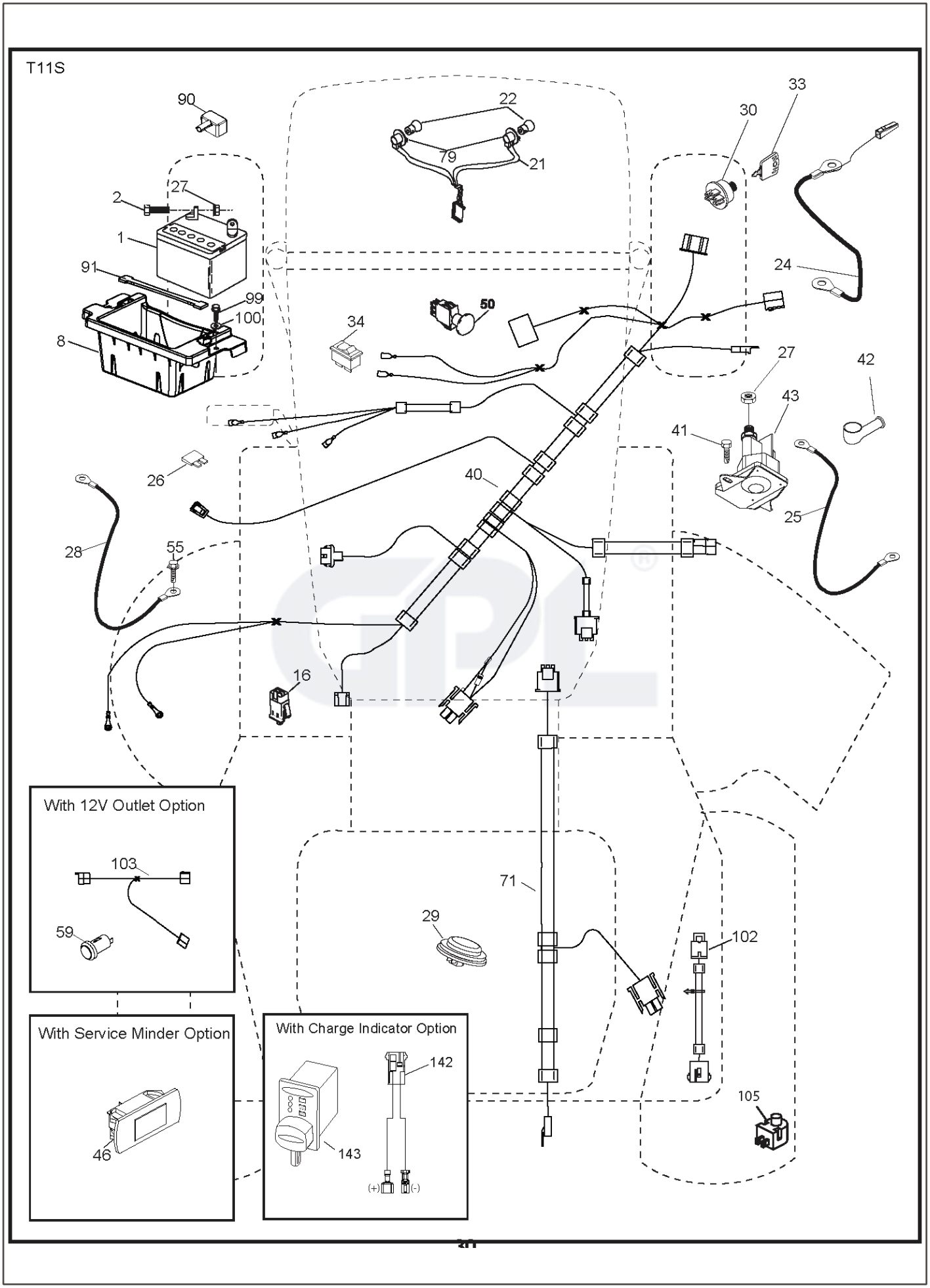
T11S
90
22
33
30
79
21
27
2
1
91
99
100
8
34
50
24
27
42
43
41
26
40
25
28
55
16
With 12V Outlet Option
103
59
71
29
102
With Service Minder Option
46
With Charge Indicator Option
142
143
(+)
(-)
105

REF.	PART NO.	DESCRIPTION	REMARK	QTY.	KIT
1	532163465	BATTERY		1	
2	874760412	BOLT		1	
8	532186491	BOX		1	
16	532176138	MICRO SWITCH		1	
21	532400252	HARNESS		1	
22	532004152	BULB		1	
24	532400253	CABLE		1	
25	532412895	CABLE.STARTER.6G.BL/RE*SUBS/2*		1	
26	532175158	FUSE		1	
27	873510400	NUT		1	
28	532145491	CABLE		1	
29	532401545	SWITCH		1	
30	532193350	IGNITION MODULE		1	
33	532411933	KEY		1	
34	532110712	SWITCH		1	
40	581022701	HARNESS		1	
41	817720408	SCREW		1	
42	532131563	COVER		1	
43	532192507	SOLENOID		1	
46	532401763	DISPLAY		1	
50	532174651	SWITCH		1	
55	817060512	SCREW		1	
59	532400303	OUTLET–12 VOLT		1	
71	532194276	CABLE ASSY		1	
79	532175242	HOLDER		1	
90	532435395	TERMINAL COVER		1	
91	532190270	STRAP BATTERY MOUNT FRO		1	
99	817670412	SCREW		1	
100	819091416	WASHER		1	
102	532404454	CABLE		1	
103	532407962	CABLE		1	
105	532407568	SWITCH		1	
142	583857801	HARNESS		1	
143	532448059	HARNESS		1	

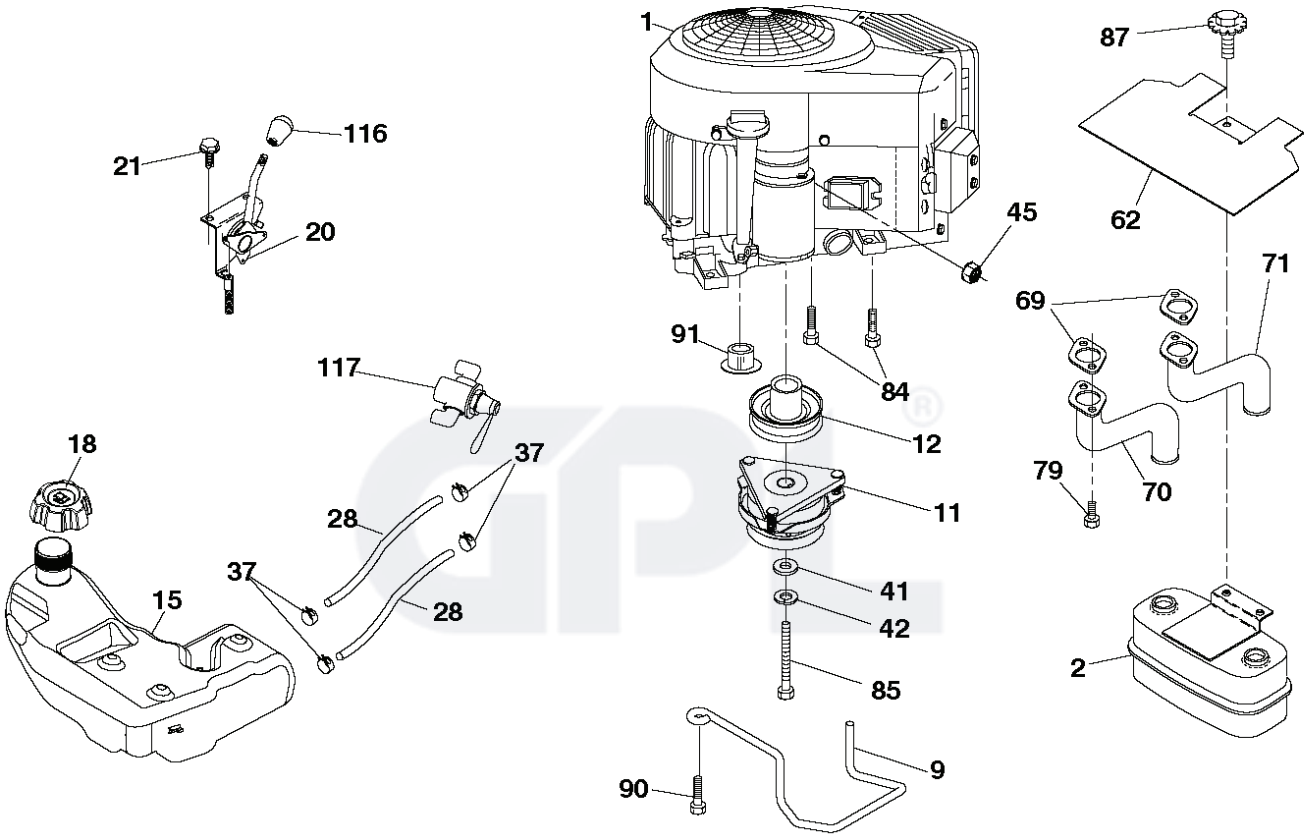

29

SPARK ARRESTER KIT

engine-tex_bs-2cyl_27

REF.	PART NO.	DESCRIPTION	REMARK	QTY.	KIT
1	000000000	W/O DESCRIPTION	Engine Briggs Model No. 44P777-1573-G5(442257)	1	
2	532445962	MUFFLER		1	
9	532194320	BELT GUIDE		1	
11	532400008	CLUTCH		1	
12	532405097	PULLEY		1	
15	532422804	TANK FUEL		1	
18	532439645	FUEL CAP		1	
20	532424340	CONTROL THROTTLE/CHOKE		1	
21	532416358	SCREW		1	
28	532401135	LINE.FUEL.64"REAR.EMIS		1	
29	532137180	SPARK ARRESTER KIT		1	
37	532123487	HOSE CLAMP		1	
41	532126197	WASHER		1	
42	810040700	WASHER		1	
45	873510400	NUT		1	
62	532434017	SHIELD		1	
69	532165391	GASKET		1	
70	532159955	TUBE		1	
71	532160589	TUBE		1	
79	532183906	SCREW		1	
84	817060620	SCREW		1	
85	532173937	BOLT		1	
87	537171877	BOLT		1	
90	817000616	SCREW		1	
91	532187495	BUSHING		1	
116	539132624	KNOB		1	
117	532420828	VALVE FUEL RESERVE		1	

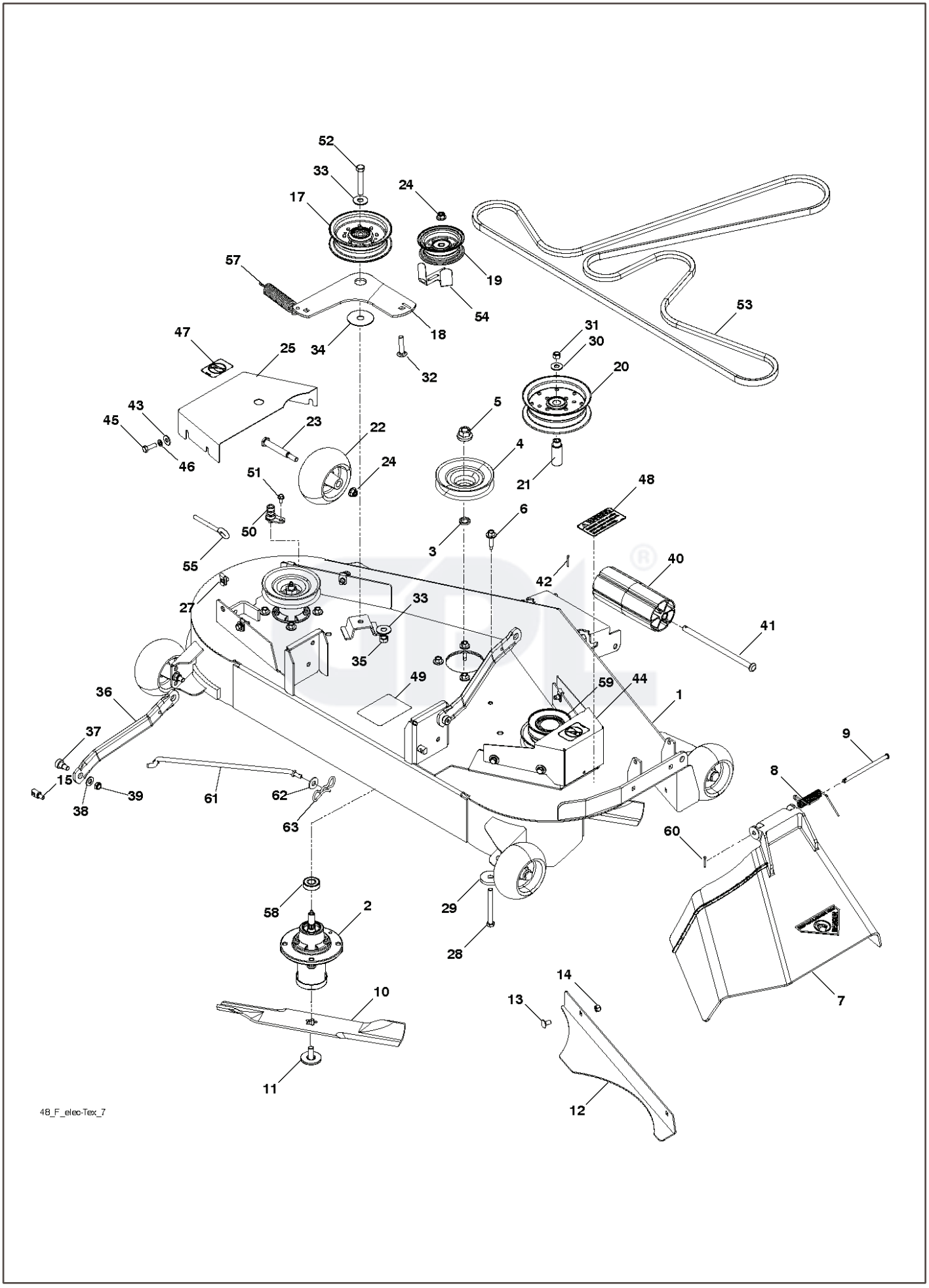
52
33
17
24
57
19
54
53
18
34
47
25
32
31
30
20
43
45
23
22
5
46
24
4
21
51
48
50
6
3
55
40
42
27
33
41
35
49
59
44
36
1
37
9
15
8
39
61
62
38
63
60
58
2
29
28
14
10
13
7
11
12
48_F_elec-Tex_7

REF.	PART NO.	DESCRIPTION	REMARK	QTY.	KIT
- -	594742001	SERVICE KIT		1	
1	594742001	SERVICE KIT		1	
2	539112170	HOUSING ASSY		1	
3	532187690	WASHER		1	
4	532174375	PULLEY		1	
5	532400234	NUT		1	
6	532173984	SCREW		1	
7	539110732	DEFLECTOR		1	
8	539110735	SPRING		1	
9	539110736	CLEVIS PIN		1	
10	539113425	RIDE ON BLADE		1	
11	532193003	SCREW		1	
12	539113427	PLATE		1	
13	872110505	BOLT		1	
14	873800500	LOCK NUT		1	
15	532195161	STUD		1	
17	532196104	PULLEY		1	
18	574827101	ARM		1	
19	532177968	PULLEY		1	
20	539132728	PULLEY		1	
21	575224501	BUSHING		1	
22	532133957	WHEEL		1	
23	532193406	BOLT		1	
24	521996501	NUT		1	
25	575224702	SHIELD		1	
27	539104763	CLIP		1	
28	539108271	BOLT		1	
29	539106504	WASHER		1	
30	819141614	WASHER		1	
31	539976979	NUT		1	
32	539990923	RHSNB 3/8-16X1-3/4 GR 5 ZD		1	
33	539104864	WASHER		1	
34	532178515	WASHER		1	
35	807390700	NUT		1	
36	532195185	ARM		1	
37	539113621	SB 3/8-16 X 3/8 SKT HD ZD		1	
38	819131316	WASHER		1	
39	539200282	NUT		1	
40	532176066	ROLLER		1	
41	532179127	ROD ROLLER NOSE		1	
42	532194208	PIN		1	
43	819121414	WASHER		1	
44	575967202	SHIELD		1	
45	874780516	BOLT		1	
46	810030500	WASHER		1	
47	539105743	DECAL		1	
48	539113224	DECAL		1	
49	532198785	LABEL		1	
50	532415598	HOSE COUPLING		1	
51	817490408	SCREW		1	
52	874780740	BOLT		1	
53	574845602	BELT		1	
54	532141043	GUARD		1	
55	539115574	EYE BOLT		1	
57	539106850	SPRING		1	
58	532110485	BEARING		1	
59	575352901	PULLEY		1	
60	532169484	PIN		1	
61	532404851	ROD		1	
62	819131312	WASHER		1	
63	532194208	PIN		1	

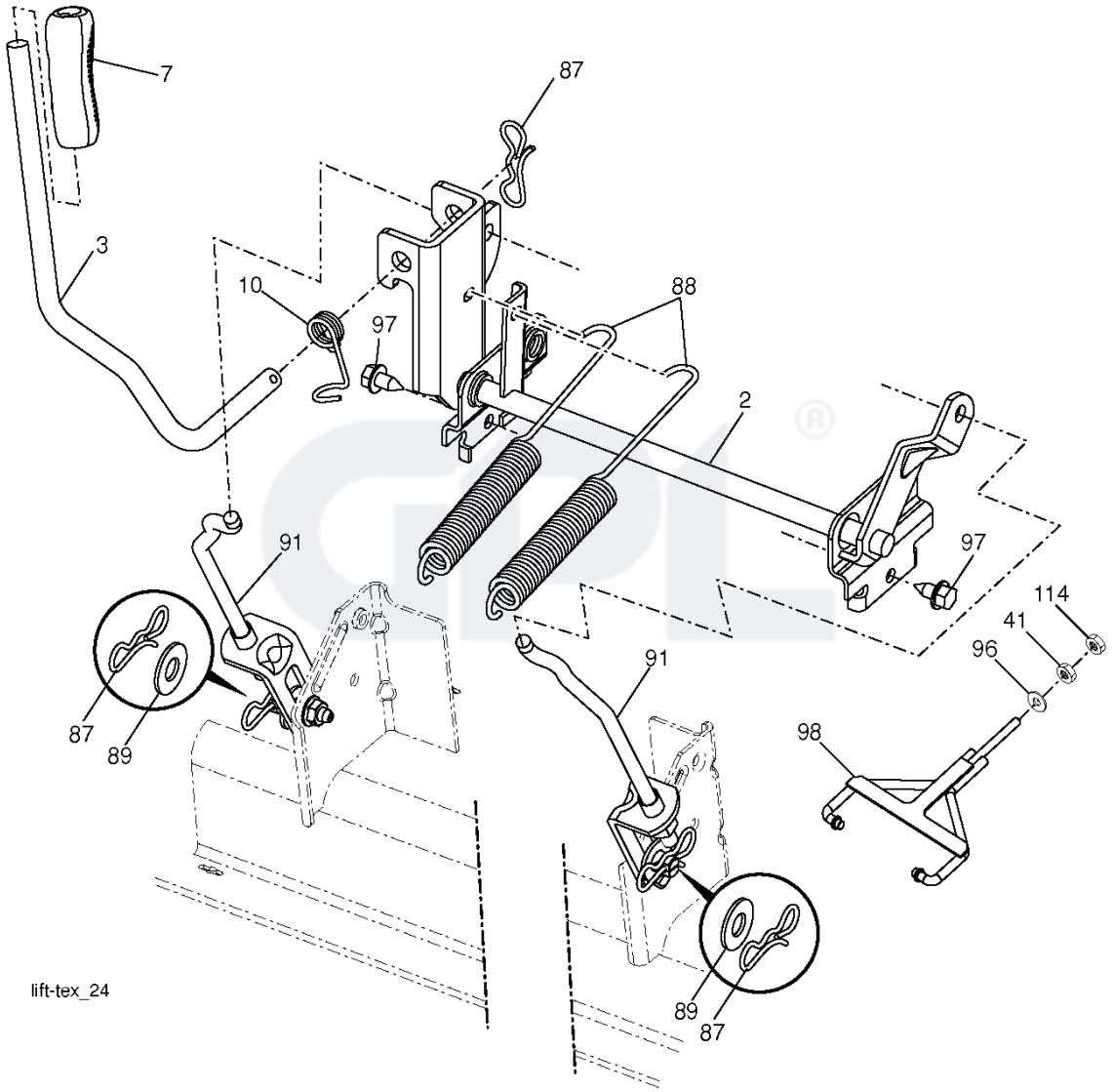
7
87
3
10
97
88
2
91
97
114
41
96
91
87
89
98
89
87
lift-tex_24

REF.	PART NO.	DESCRIPTION	REMARK	QTY.	KIT
2	532422025	SHAFT		1	
3	532195230	LEVER		1	
7	532411555	GRIP		1	
10	532196314	SPRING		1	
41	532175994	NUT		1	
87	532194209	SPRING		1	
88	532410710	SPRING		1	
89	819191912	WASHER		1	
91	532403407	LINK		1	
96	532195263	BUSHING		1	
97	817000612	SCREW		1	
98	574822501	SUSPENSION		1	
114	873360700	NUT		1	

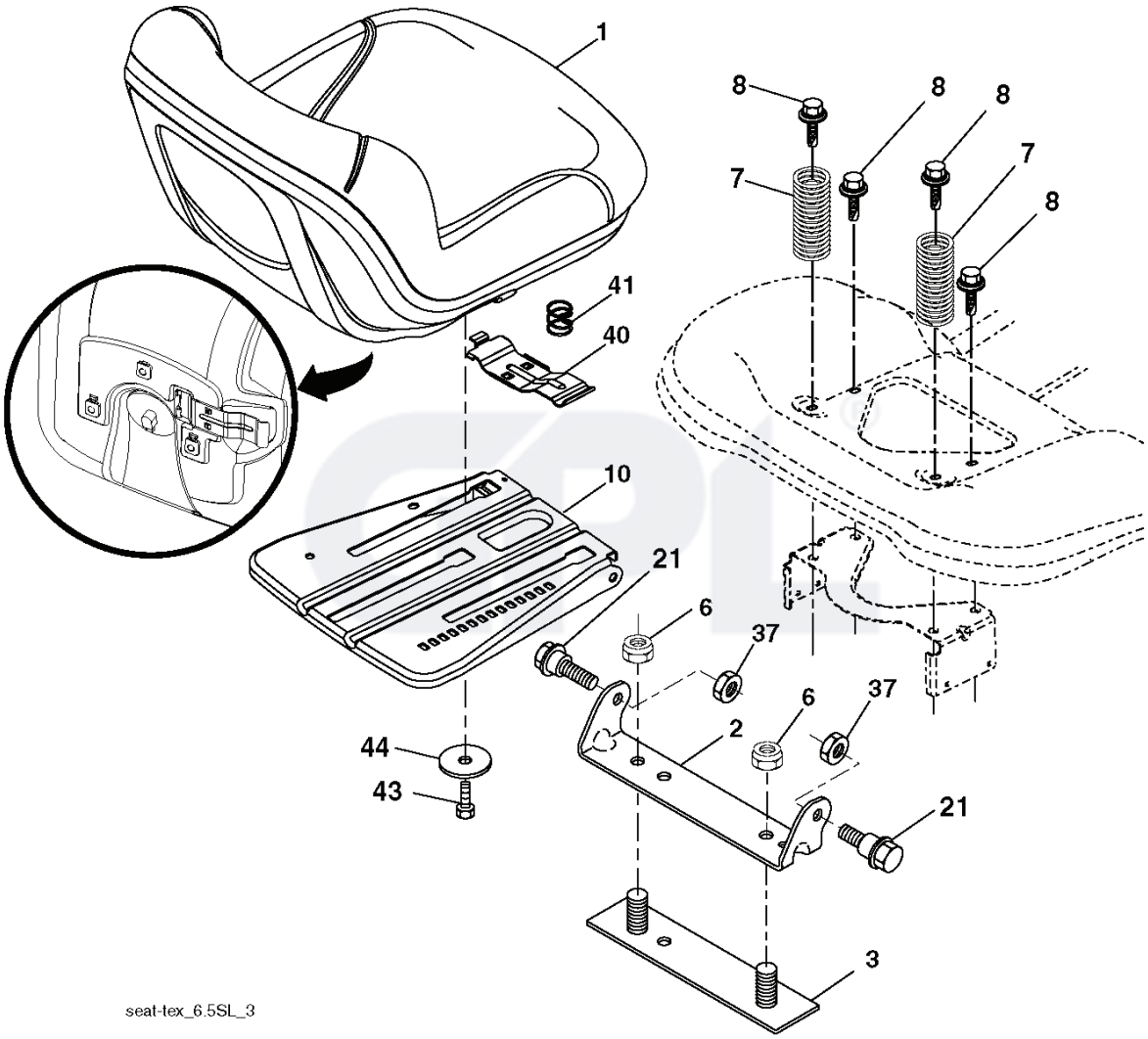
1
8
8
8
7
7
8
41
40
10
21
6
37
6
37
2
44
43
21
3
seat-tex_6.5SL_3

REF.	PART NO.	DESCRIPTION	REMARK	QTY.	KIT
1	532443263	SEAT		1	
2	532180166	BRACKET		1	
3	532140675	STRAP		1	
6	873800600	NUT		1	
7	532124181	SPRING		1	
8	532171877	BOLT		1	
10	532196977	PLATE		1	
21	532171852	BOLT		1	
37	873800500	LOCK NUT		1	
40	532439871	HANDLE		1	
41	532198200	SPRING		1	
43	874760612	BOLT		1	
44	819133812	WASHER		1	

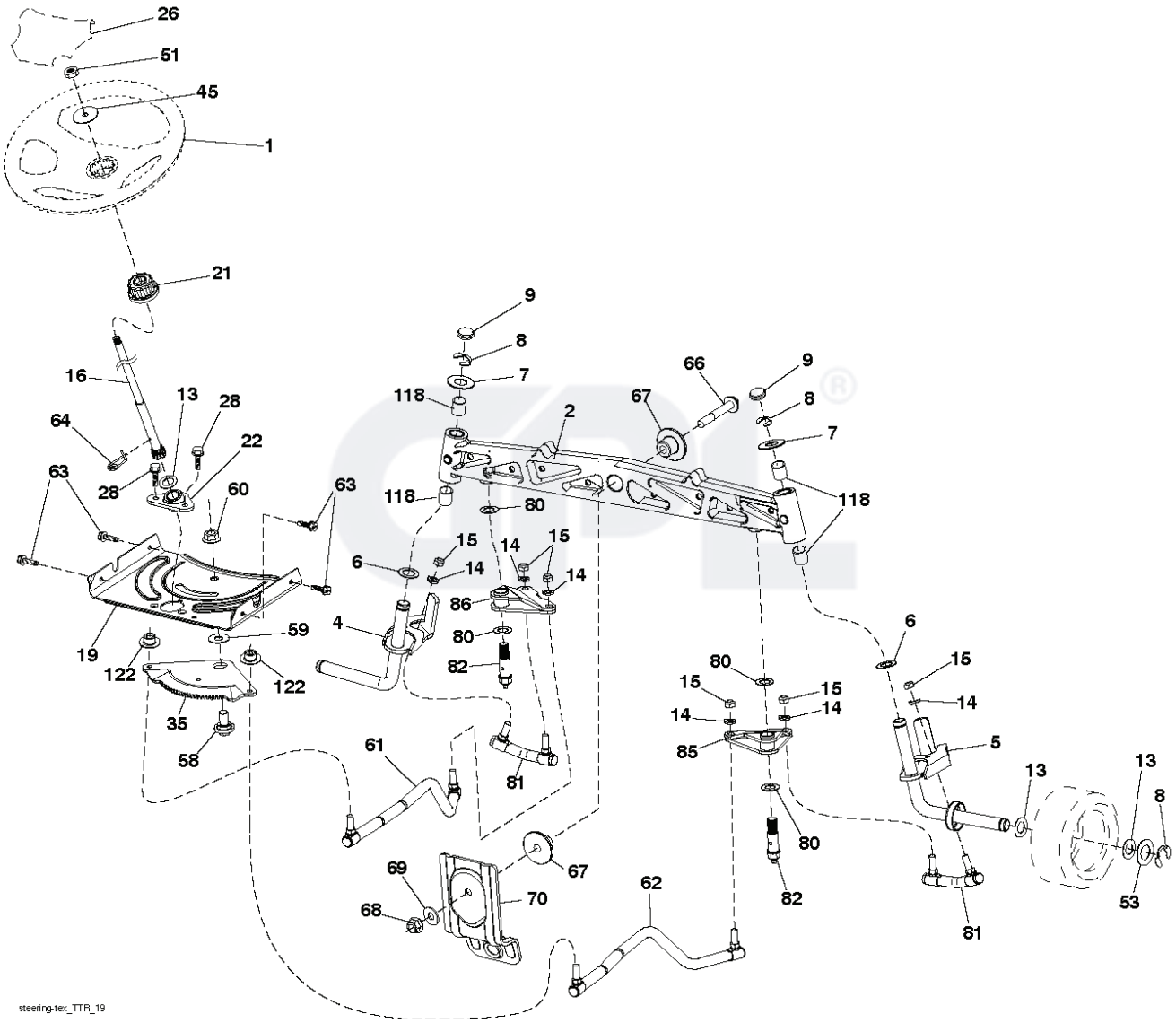
26
51
45
1
21
9
8
7
66
9
8
7
16
13
28
64
22
63
28
60
63
118
2
67
118
118
80
15
14
15
6
14
14
86
4
80
59
82
19
122
122
35
58
61
81
80
15
15
14
14
85
6
15
14
5
13
13
8
80
82
69
67
70
62
68
53
81
steering-tex_TTR_19

REF.	PART NO.	DESCRIPTION	REMARK	QTY.	KIT
1	532439740	STEERING WHEEL		1	
2	532436870	WHEEL AXLE		1	
4	532436873	SPINDLE		1	
5	532436874	SPINDLE		1	
6	532124931	WASHER		1	
7	532121748	WASHER		1	
8	812000029	RETAINER RING		1	
9	532121232	HUB CAP		1	
13	532121749	WASHER		1	
14	810040600	WASHER		1	
15	873540600	NUT		1	
16	532444212	SHAFT		1	
19	532194729	PLATE		1	
21	532437747	ADAPTER WHEEL		1	
22	532194845	BUSHING		1	
26	532439743	HUB CAP		1	
28	817000612	SCREW		1	
35	532440770	GEAR		1	
45	819183812	WASHER		1	
51	873940800	NUT		1	
53	532188967	WASHER		1	
58	532194747	BOLT		1	
59	532194748	WASHER		1	
60	873971000	NUT		1	
61	532436884	LINK		1	
62	532436885	TUBE		1	
63	817000512	SCREW		1	
64	532199849	SPRING RETAINER		1	
66	871020748	BOLT		1	
67	532194737	BUSHING		1	
68	873900700	NUT		1	
69	532199162	WASHER		1	
70	532196197	BRACKET		1	
80	532001370	WASHER		1	
81	532436887	LINK		1	
82	532436877	BOLT		1	
85	532441873	PIVOT		1	
86	532441872	PIVOT		1	
118	532406013	BEARING		1	
122	532444962	CAP		1	

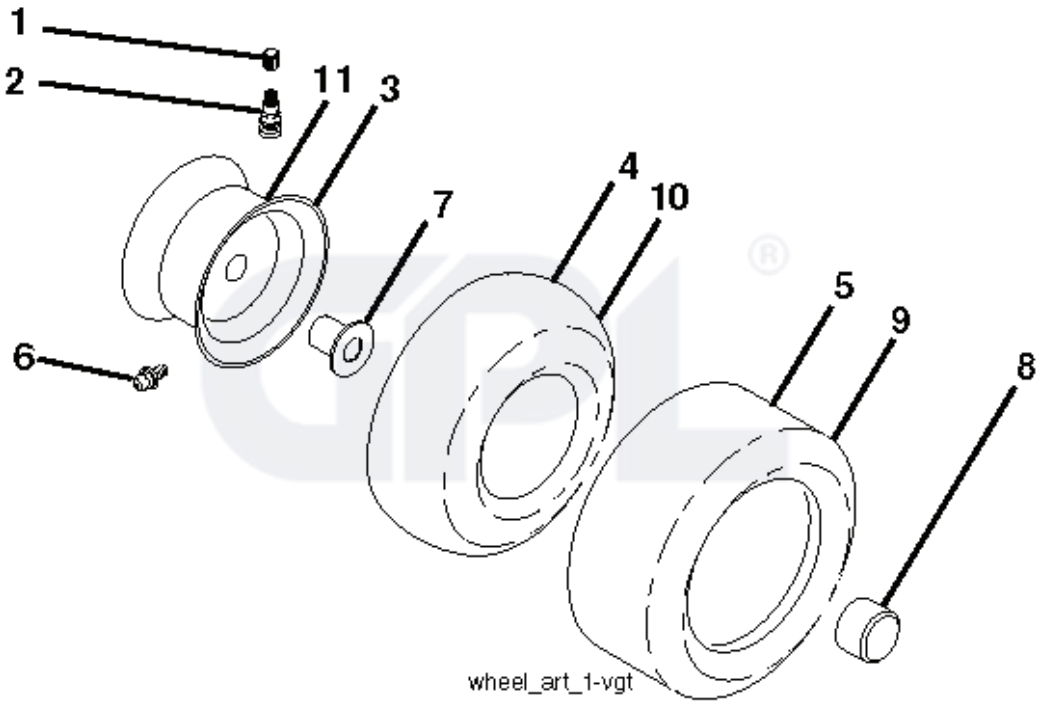
1
2
11
3
7
4
10
5
9
8
6
wheel_art_1-vgt

REF.	PART NO.	DESCRIPTION	REMARK	QTY.	KIT
1	532059192	CAP VALVE		1	
2	532065139	NIPPLE		1	
3	532181839	RIM ASSY	FRONT	1	
4	532008134	HOSE	(Service Item Only)	1	
5	532106230	TIRE	FRONT	1	
6	532124957	FITTING	(Front Wheel Only)	1	
7	532124959	BEARING	(Front Wheel Only)	1	
8	532175039	HUB CAP		1	
9	532122082	TIRE	REAR	1	
10	532124926	HOSE	(Service Item Only)	1	
11	532138337	RIM SPROCKET	REAR	1	
- -	532144334	SEALING FOAM		1	

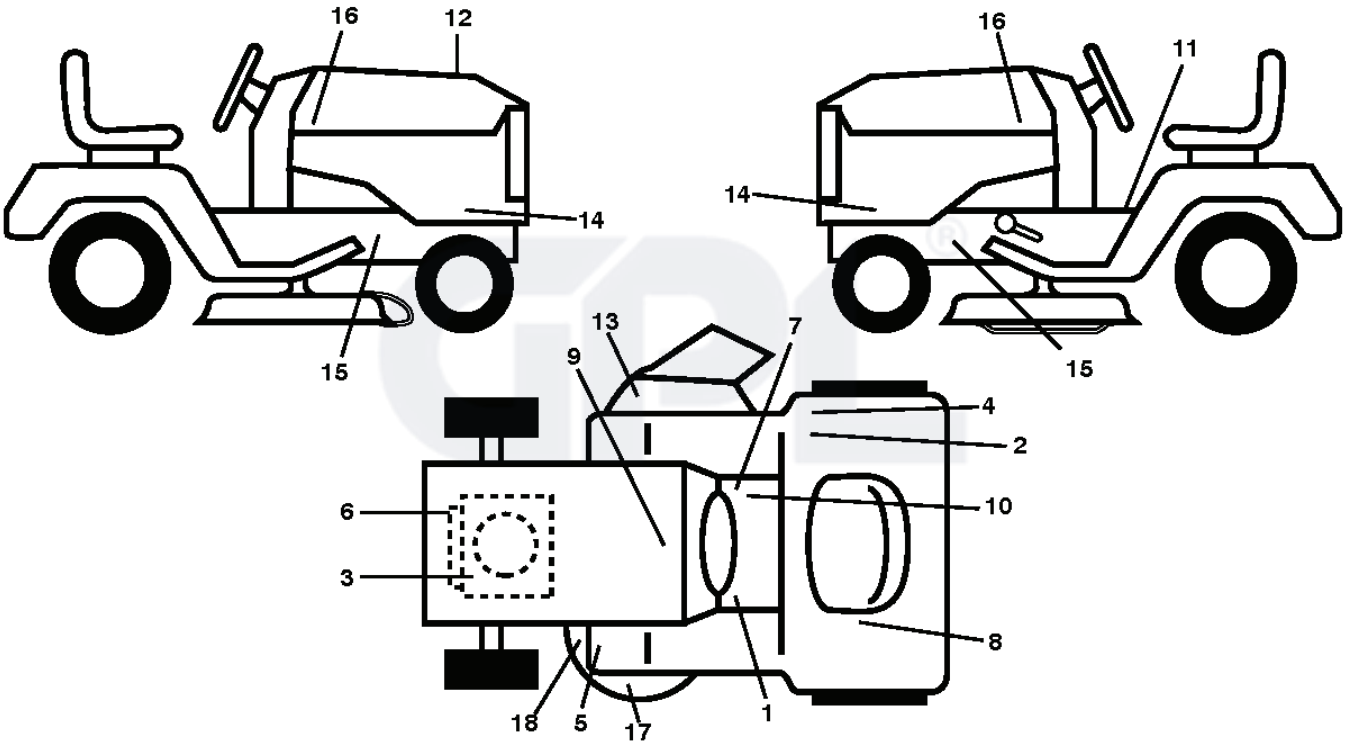
16
12
14
15
16
11
14
15
13
7
9
4
2
6
10
3
8
18
5
17
1

REF.	PART NO.	DESCRIPTION	REMARK	QTY.	KIT
1	532159737	DECAL		1	
2	532168869	DECAL		1	
3	532432917	DECAL		1	
4	532124433	DECAL		1	
5	532418600	DECAL		1	
6	532196841	DECAL		1	
7	532140837	DECAL		1	
8	532426209	DECAL		1	
9	532145005	DECAL		1	
10	532178302	DECAL		1	
11	532400389	LABEL		1	
12	532443842	DECAL		1	
13	581724301	DECAL		1	
14	532444461	DECAL		1	
15	532159736	DECAL		1	
16	581627301	DECAL		1	
17	539113224	DECAL		1	
18	532198785	LABEL		1	
- -	532166960	DECAL		1	
- -	532439882	PAD		1	
- -	532439881	PAD		1	