Husqvarna

5

Royal 36EL

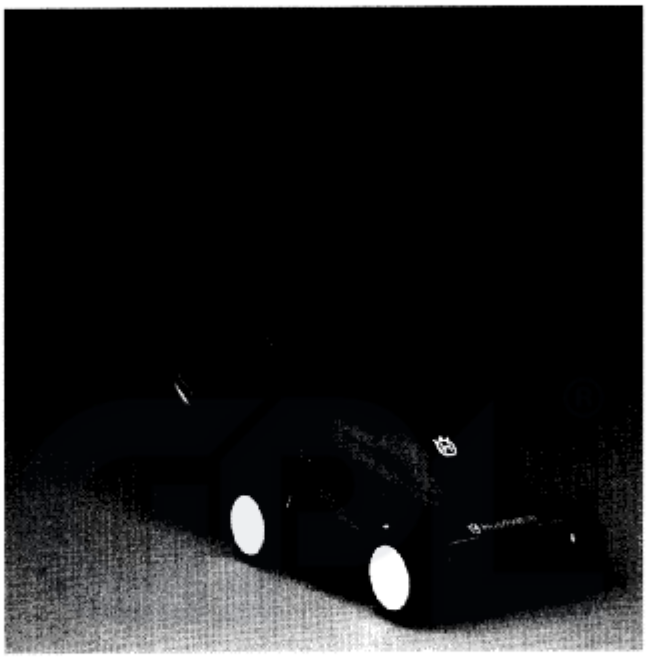

1.1996

Spare parts
Ersatzteile
Pièces détachées
Reserve onderdelen
Repuestos
Reservdelar

4. 04-95 Printed in SWEDEN

106 23 75-65

AB K. TRYCKAREN, HUSKVARNA

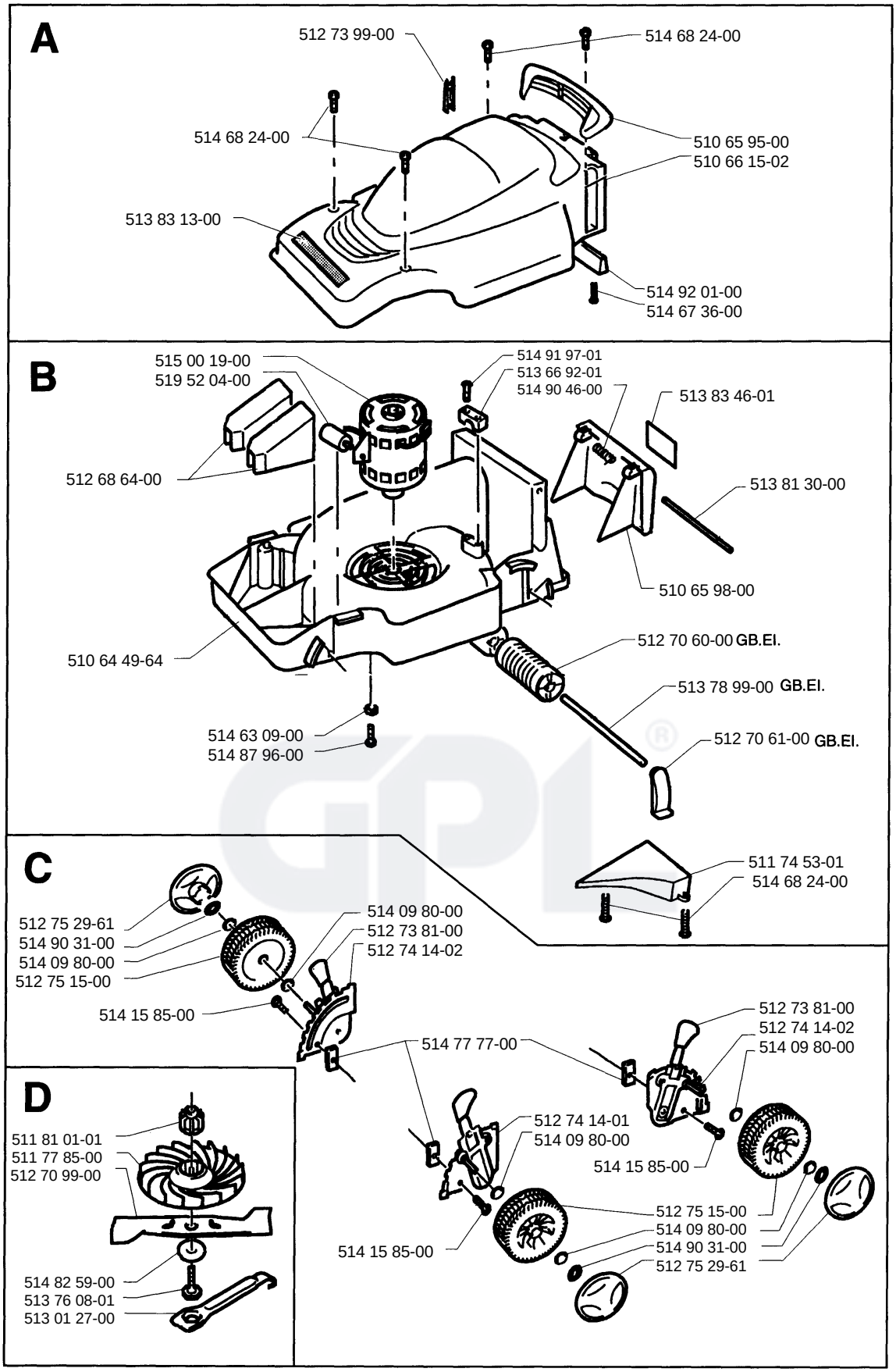
A
512 73 99-00
514 68 24-00
514 68 24-00
510 65 95-00
510 66 15-02
513 83 13-00
514 92 01-00
514 67 36-00
B
515 00 19-00
519 52 04-00
514 91 97-01
513 66 92-01
514 90 46-00
513 83 46-01
512 68 64-00
513 81 30-00
510 65 98-00
510 64 49-64
512 70 60-00 GB.EI.
513 78 99-00 GB.EI.
514 63 09-00
514 87 96-00
512 70 61-00 GB.EI.
511 74 53-01
514 68 24-00
C
512 75 29-61
514 90 31-00
514 09 80-00
512 75 15-00
514 09 80-00
512 73 81-00
512 74 14-02
514 15 85-00
514 77 77-00
512 73 81-00
512 74 14-02
514 09 80-00
512 74 14-01
514 09 80-00
514 15 85-00
512 75 15-00
514 09 80-00
514 90 31-00
512 75 29-61
514 15 85-00
D
511 81 01-01
511 77 85-00
512 70 99-00
514 82 59-00
513 76 08-01
513 01 27-00

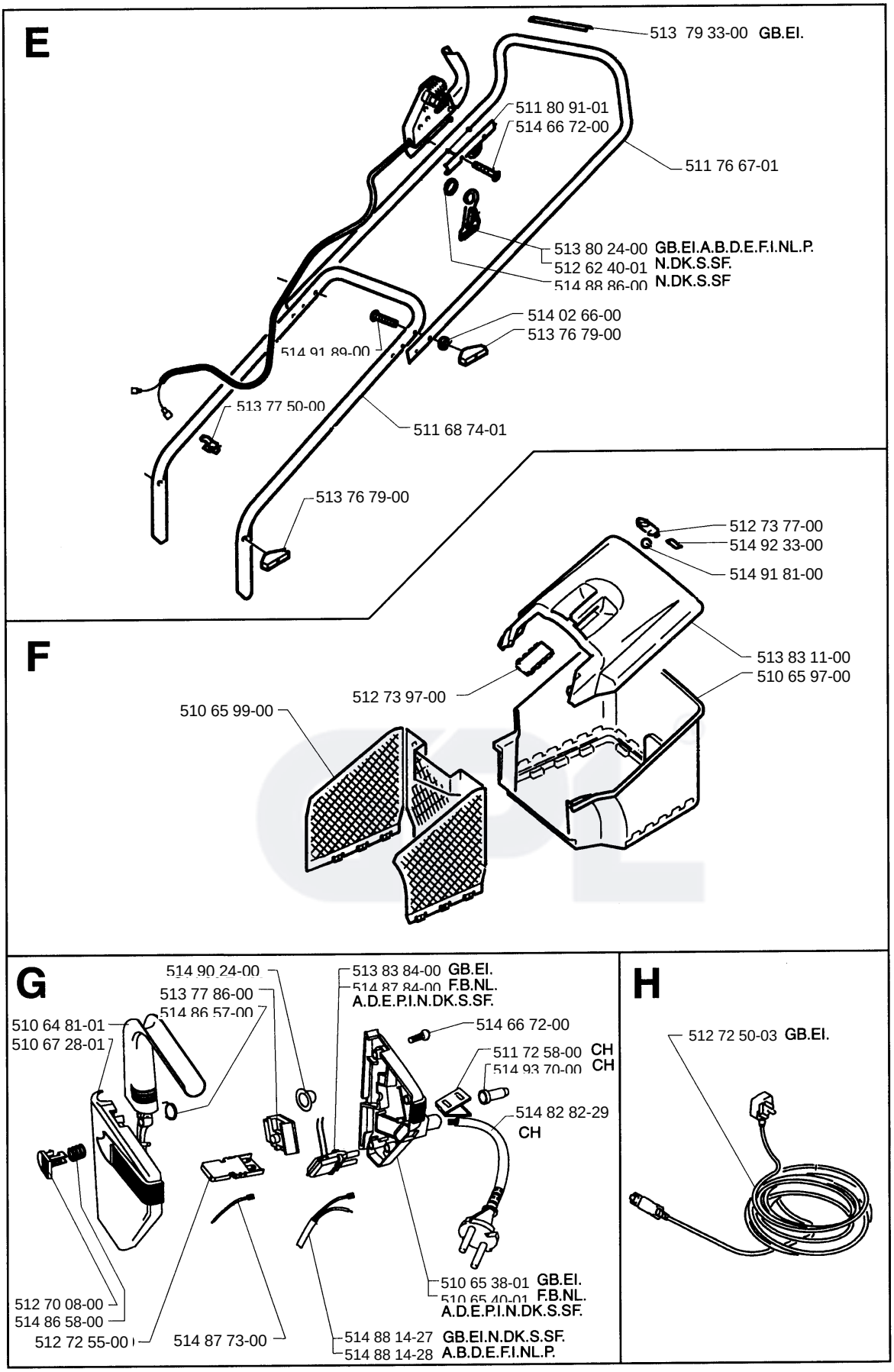
E
513 79 33-00 GB.EI.
511 80 91-01
514 66 72-00
511 76 67-01
513 80 24-00 GB.EI.A.B.D.E.F.I.NL.P.
512 62 40-01 N.DK.S.SF.
514 88 86-00 N.DK.S.SF
514 02 66-00
513 76 79-00
514 91 89-00
513 77 50-00
511 68 74-01
513 76 79-00
512 73 77-00
514 92 33-00
514 91 81-00
F
513 83 11-00
510 65 97-00
512 73 97-00
510 65 99-00
G
514 90 24-00
513 77 86-00
514 86 57-00
510 64 81-01
510 67 28-01
513 83 84-00 GB.EI.
514 87 84-00 F.B.NL.
A.D.E.P.I.N.DK.S.SF.
514 66 72-00
511 72 58-00 CH
514 93 70-00 CH
514 82 82-29
CH
510 65 38-01 GB.EI.
510 65 40-01 F.B.NL.
A.D.E.P.I.N.DK.S.SF.
512 70 08-00
514 86 58-00
512 72 55-00
514 87 73-00
514 88 14-27 GB.EI.N.DK.S.SF.
514 88 14-28 A.B.D.E.F.I.NL.P.
H
512 72 50-03 GB.EI.

MODEL NUMBER R36E

PART NUMBER	SQUARE	NOTE	PART NUMBER	SQUARE	NOTE	PART NUMBER	SQUARE	NOTE	PART NUMBER	SQUARE	NO
510 64 49-64	B		514 92 01-00	A							
510 64 81-01	G		514 92 33-00	F							
510 65 38-01	G		514 93 70-00	G							
510 65 40-01	G		515 00 19-00	B							
510 65 95-00	A		519 52 04-00	B							
510 65 97-00	F										
510 65 98-00	B										
510 65 99-00	F										
510 66 15-02	A										
510 67 28-01	G										
511 68 74-01	E										
511 74 53-01	B										
511 75 58-00	G										
511 76 67-01	E										
511 77 85-00	D										
511 80 91-01	E										
511 81 01-01	D	N									
512 62 40-01	E										
512 68 64-00	B										
512 70 08-00	G										
512 70 60-00	B										
512 70 61-00	B										
512 70 99-00	D										
512 72 50-03	H										
512 72 55-00	G										
512 73 77-00	F										
512 73 81-00	C										
512 73 97-00	F										
512 73 99-00	A										
512 74 14-01	C										
512 74 14-02	C										
512 75 15-00	C										
512 75 29-61	C										
513 01 27-00	D										
513 66 92-01	B										
513 76 08-01	D										
513 76 79-00	E										
513 77 50-00	E										
513 77 86-00	G										
513 78 99-00	B										
513 79 33-00	E										
513 80 24-00	E										
513 81 30-00	B										
513 83 11-00	F										
513 83 13-00	A										
513 83 46-01	B										
513 83 84-00	G										
514 02 66-00	E										
514 09 80-00	C										
514 15 85-00	C										
514 63 09-00	B										
514 66 72-00	E,G										
514 67 36-00	A										
514 68 24-00	A,B										
514 77 77-00	C										
514 82 59-00	D										
514 82 82-29	G										
514 86 57-00	G										
514 86 58-00	G										
514 87 73-00	G										
514 87 84-00	G										
514 87 96-00	B										
514 88 14-27	G										
514 88 14-28	G										
514 88 86-00	E										
514 90 24-00	G										
514 90 31-00	C										
514 90 46-00	B										
514 91 81-00	F										
514 91 97-01	B										
514 91 98-00	E										