Z 246i, 967323901-00, 2016-08

SPARE PARTS LIST

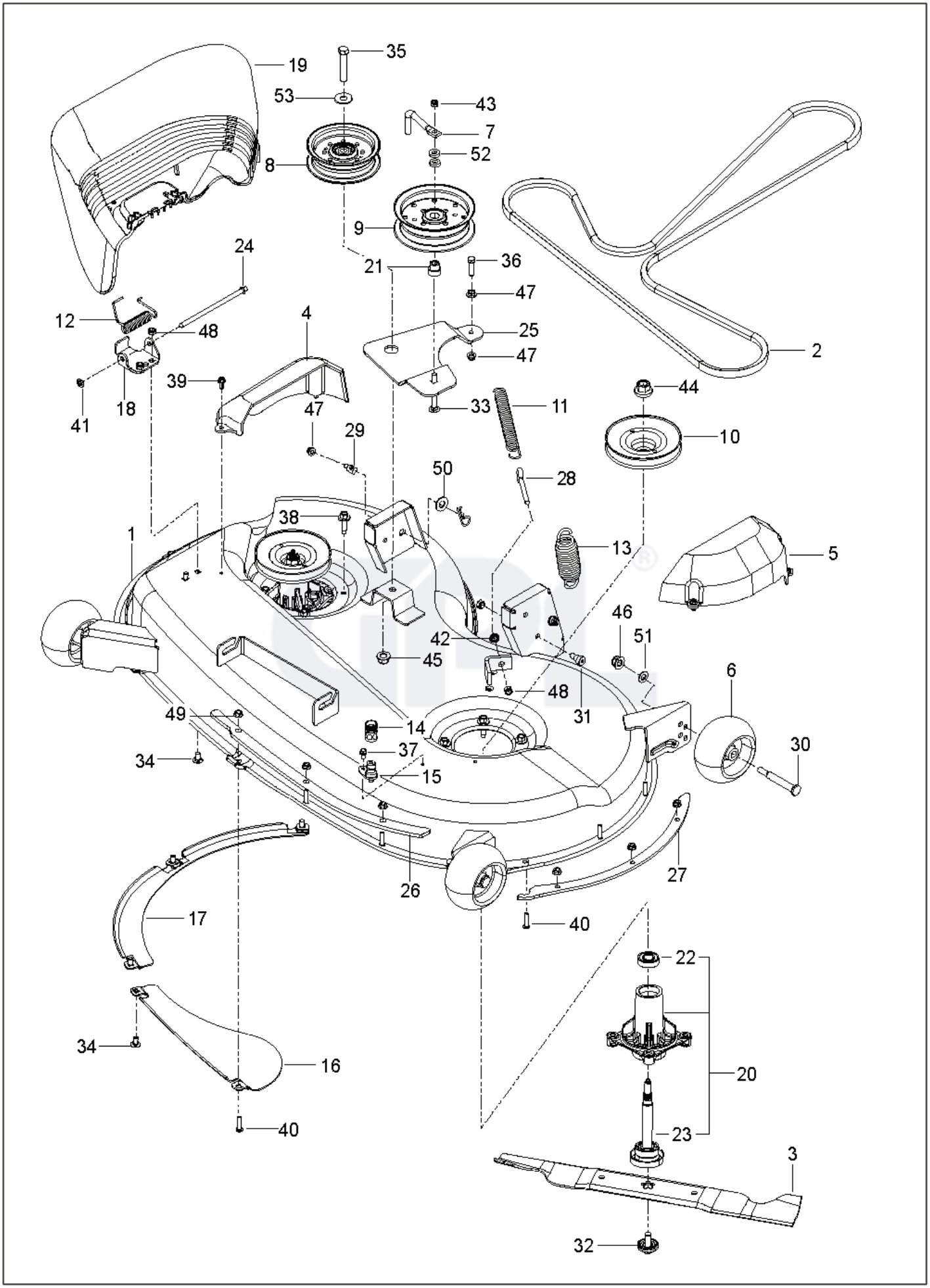

19
35
53
43
7
52
8
9
24
21
36
47
12
48
4
25
47
2
39
44
41
18
47
33
11
29
10
50
28
38
1
13
5
46
42
51
45
6
48
31
49
14
30
34
37
15
27
26
17
40
22
34
16
20
40
23
3
32

REF.	PART NO.	DESCRIPTION	REMARK	QTY.	KIT
1	522744301	ASSEMBLY	w/ SAFETY DECALS	1	
2	539117245	V-BELT		1	
3	532405380	RIDE ON BLADE		2	
4	532405506	COVER		1	
5	597683301	COVER		1	
6	589527301	WHEEL		3	
7	522629701	KEEPER		1	
8	532196104	PULLEY		1	
9	589766101	PULLEY		1	
10	588586601	PULLEY		2	
11	582504001	SPRING		1	
12	532178102	SPRING		1	
13	539118762	SPRING		1	
14	532416405	COUPLING		1	
15	532415598	HOSE COUPLING		1	
16	532403149	PLATE		1	
17	532403150	PLATE		1	
18	532192557	HINGE		1	
19	532405357	DEFLECTOR		1	
20	587125201	MANDREL		2	
21	539112076	BUSHING		1	
22	585323901	BEARING		1	
23	587255601	SHAFT		2	
24	532131491	SHAFT		1	
25	588096402	ARM		1	
26	501063502	PLATE		1	
27	585317805	REINFORCEMENT PLATE		1	
28	539115574	EYE BOLT		1	
29	532195161	STUD		1	
30	532193406	BOLT		1	
31	539113621	SB 3/8–16 X 3/8 SKT HD ZD		2	
32	584309301	SCREW		2	
33	872110618	BOLT		1	
34	872140506	BOLT		6	
35	874780740	BOLT		1	
36	874520520	BOLT		1	
37	539991034	SCREW		1	
38	584953901	BOLT		8	
39	532137729	SCREW		4	
40	578296404	SCREW		6	
41	532110452	NUT		1	
42	539990585	NUT		3	
43	539200282	NUT		3	
44	532400234	NUT		2	
45	873900700	NUT		1	
46	873900600	NUT		3	
47	539112899	NUT, 5/16–18, NYLOC		3	
48	873800500	LOCK NUT		1	
49	873900400	NUT		6	
50	819212113	WASHER		2	
51	539990692	WASHER		3	
52	539109562	WASHER		2	
53	539104864	WASHER		1	

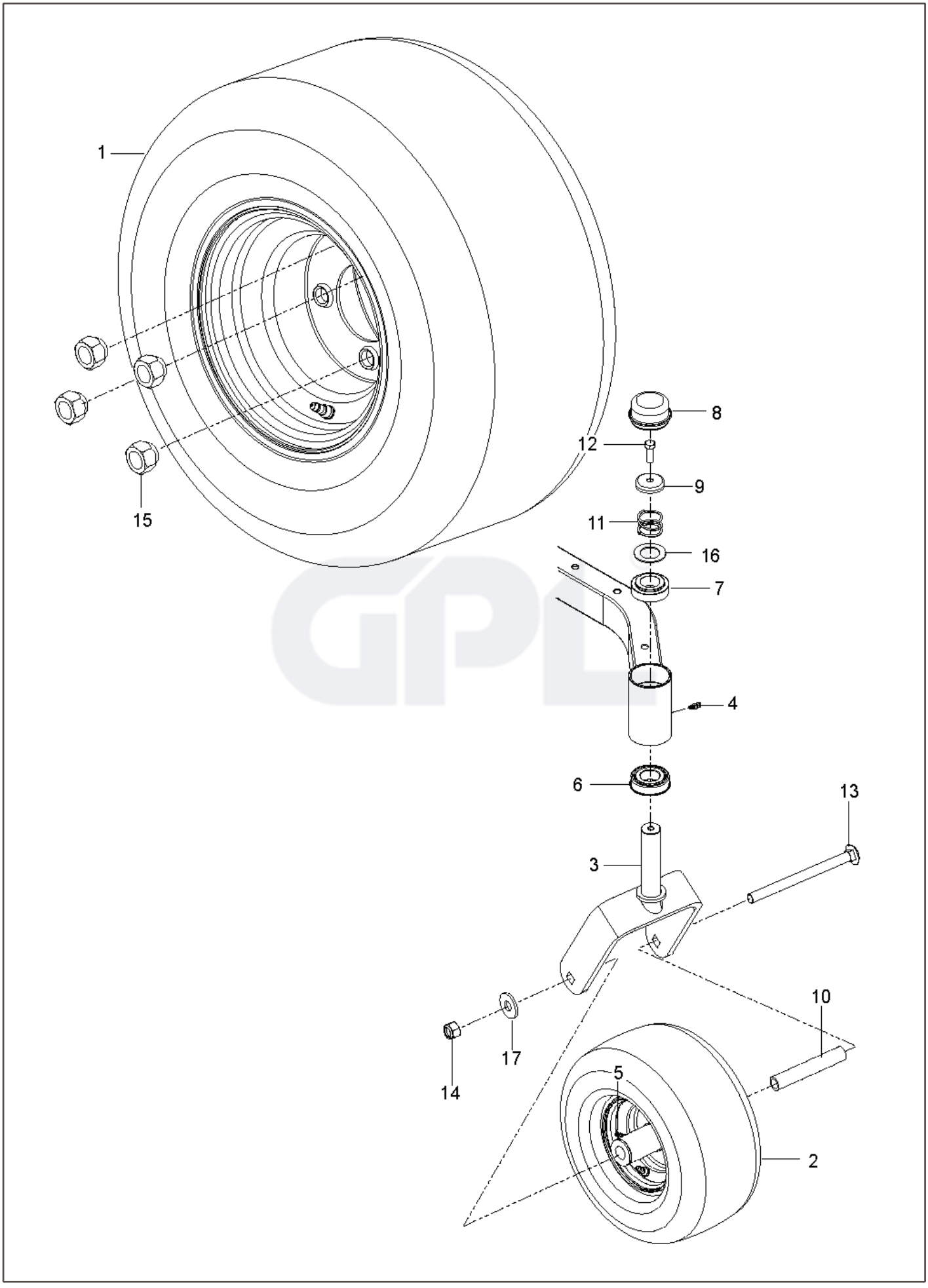
1
15
8
12
9
11
16
7
4
6
13
3
10
17
14
5
2

REF.	PART NO.	DESCRIPTION	REMARK	QTY.	KIT
1	590486601	WHEEL		2	
2	576588602	WHEEL ASSY		2	
3	586650302	YOKE		2	
4	539115638	FITTING		2	
5	539103300	NIPPLE		2	
6	539112660	BEARING		2	
7	539117901	BUSHING		2	
8	539102535	CAP		2	
9	539115749	CASTER PLUG		2	
10	576588901	SPACER		2	
11	539115747	SPRING		2	
12	874950516	SCREW		2	
13	576601501	SCREW		2	
14	873930800	NUT	Nut 1/2–13 Hex Center Lock (595316501)	2	
15	587653902	NUT		8	
16	539115675	WASHER		2	
17	819182212	WASHER		2	

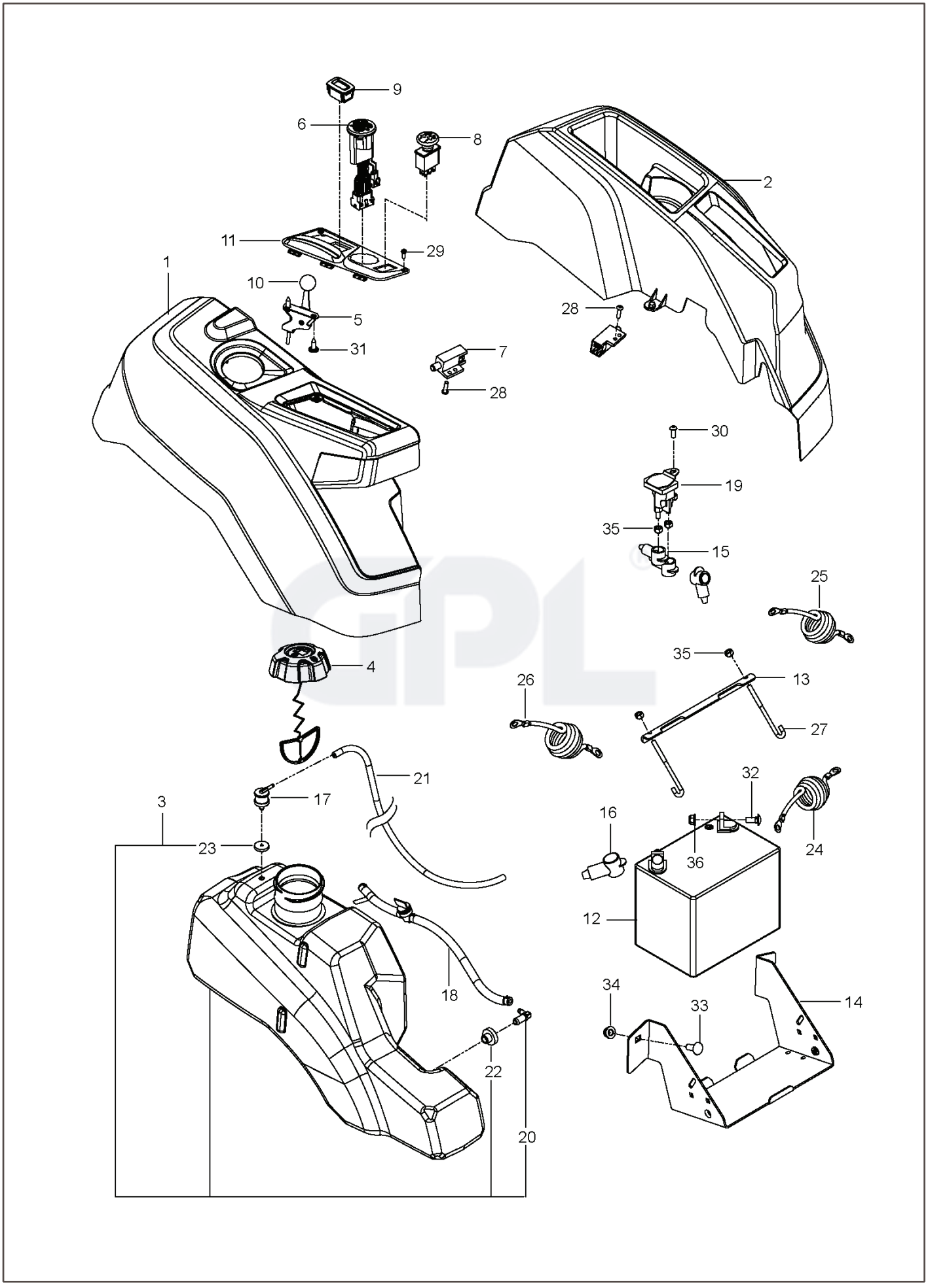
9
6
8
2
11
29
1
10
5
31
28
7
28
30
19
35
15
25
4
35
26
13
27
21
32
17
3
16
24
23
36
12
18
34
33
14
22
20

REF.	PART NO.	DESCRIPTION	REMARK	QTY.	KIT
1	585522801	CONSOLE ASSY		1	
2	586621201	CONSOLE ASSY		1	
3	578180602	FUEL TANK ASSY	Fits 2.75" filler neck	1	
4	529989702	CAP	Fits 2.00" filler neck	1	
4	585124801	FUEL CAP ASSY	Fits 2.75" filler neck	1	
5	585974902	CABLE		1	
6	586836704	SWITCH		1	
7	587601501	SWITCH		2	
8	582107602	SWITCH		1	
9	586161801	HOUR METER		1	
10	539133049	KNOB ROUND BALL		1	
11	585522703	CONTROL PANEL		1	
12	539102436	BATTERY		1	
13	510030003	BRACKET		1	
14	582609602	BOX		1	
15	532131563	COVER		3	
16	539102759	INSULATOR		1	
17	576618101	TANK VENT		1	
18	586123904	FUEL HOSE		1	
19	582042801	SOLENOID		1	
20	532139277	NIPPLE		1	
21	587044523	HOSE		1	
22	532003645	BUSHING		1	
23	532437492	GROMMET		1	
24	585734303	CABLE		1	
25	586108201	HARNESS		1	
26	585306904	CABLE		1	
27	588839401	HOOK		2	
28	586936001	SCREW		2	
29	545227101	SCREW		2	
30	539111229	SCR 1/4–20 X 5/8 BTN SKT HD ZD		1	
31	532141841	SCREW		2	
32	872140506	BOLT		2	
33	539990645	BOLT		2	
34	521996501	NUT		2	
35	539976978	NUT		5	
36	539112899	NUT, 5/16–18, NYLOC		2	
	587232102	HARNESS	NOT SHOWN	1	
	586548101	HARNESS		1	
	532109748	RELAY		1	

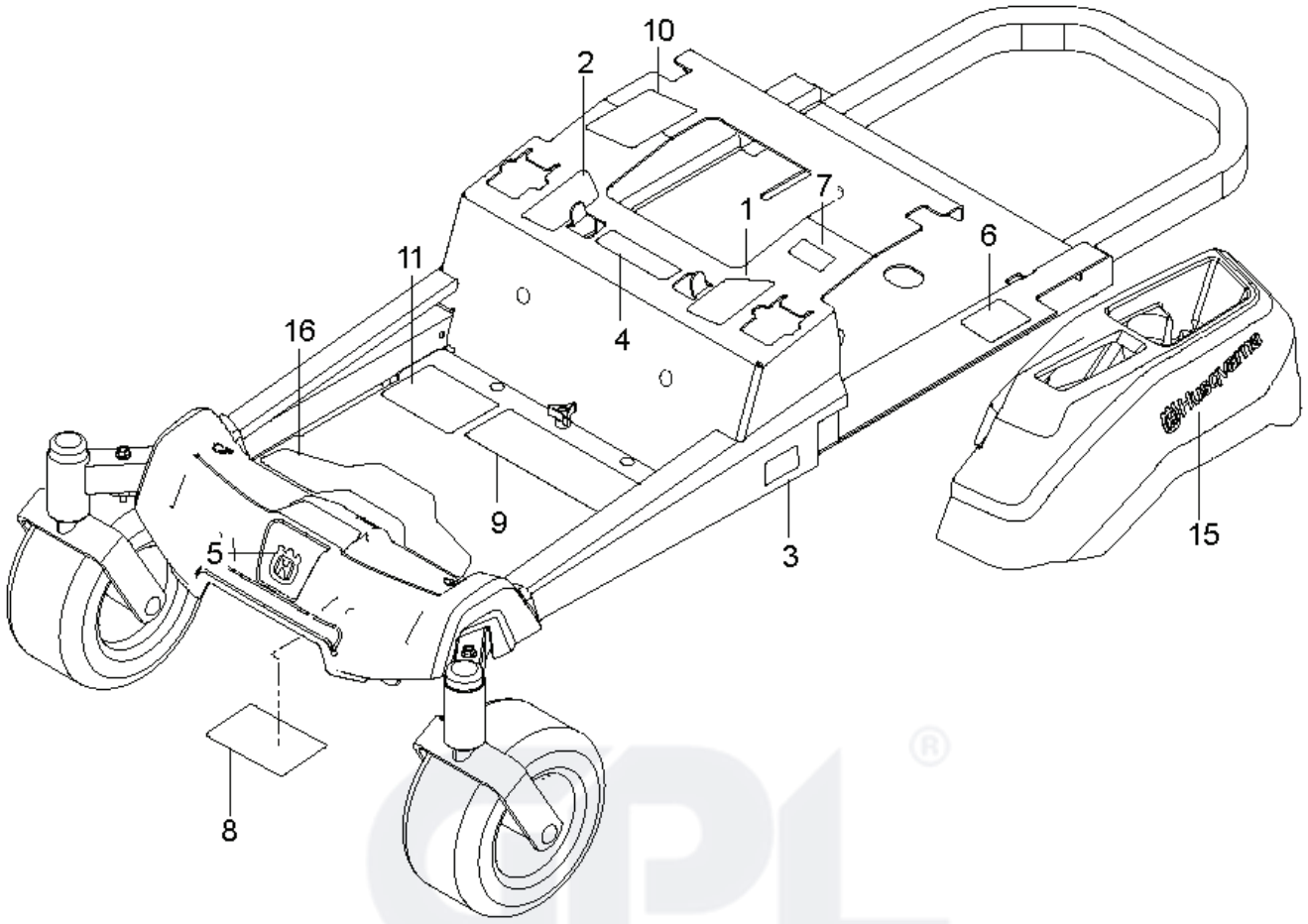
10
2
7
1
6
11
16
4
9
3
15
5
8

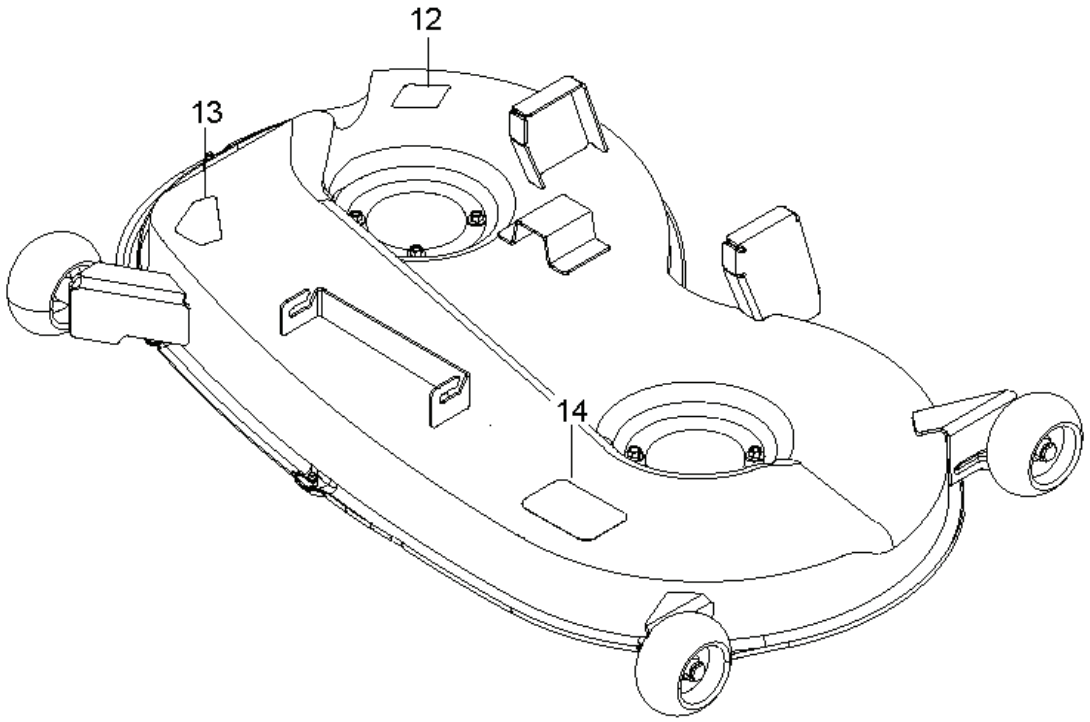
12
13
14

PART NO	REMARK	KIT