Z 246i, 967323904-01, 2016-08

SPARE PARTS LIST

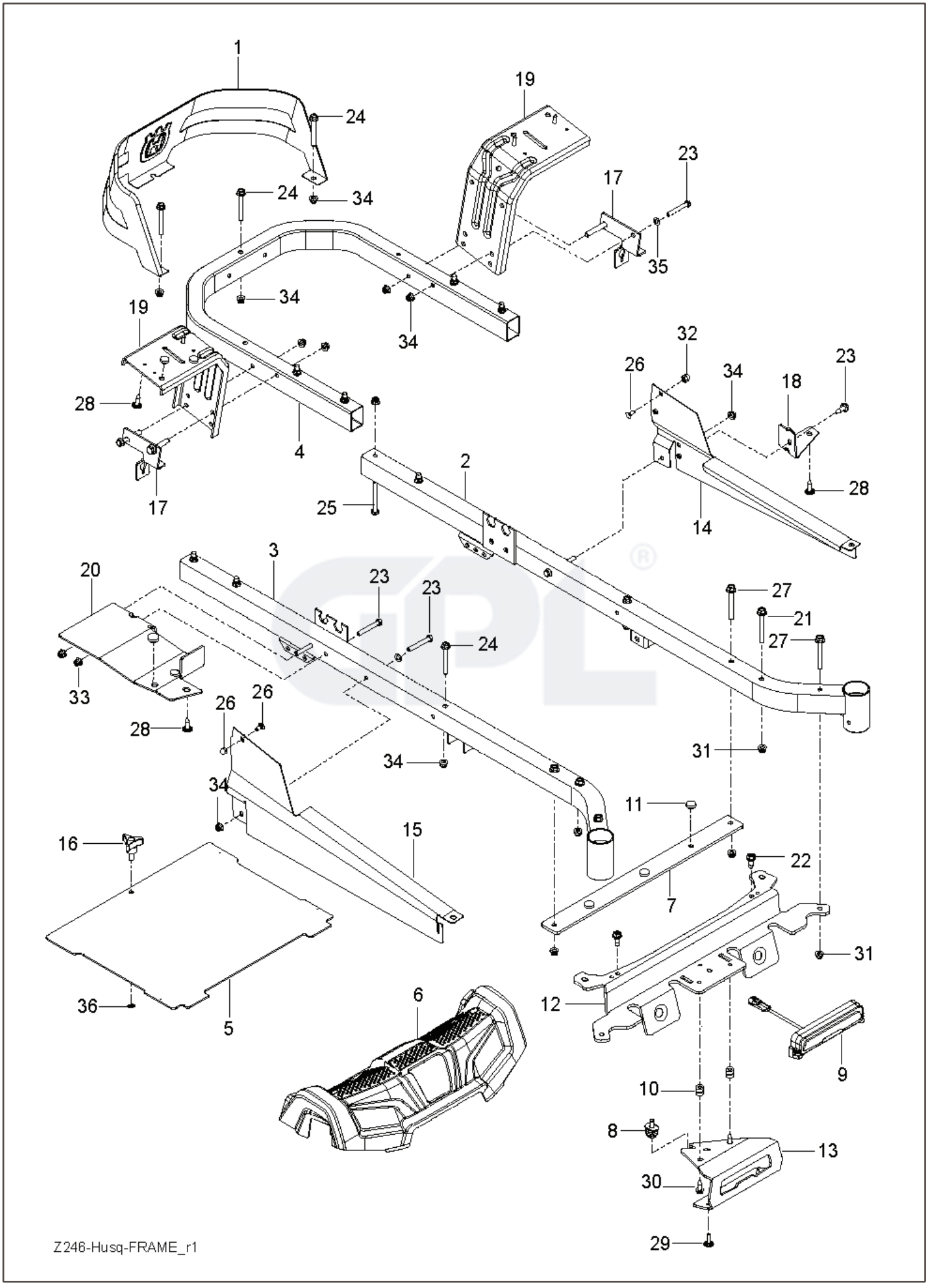
1
19
24
24
34
23
17
35
34
34
19
28
4
17
25
2
32
26
34
18
23
28
14
3
20
23
23
24
27
21
27
33
28
26
26
34
31
34
11
15
16
22
7
31
36
5
6
12
9
10
8
13
30
29
Z246-Husq-FRAME_r1

REF.	PART NO.	DESCRIPTION	REMARK	QTY.	KIT
1	585039802	GUARD		1	
2	589283302	FRAME TUBE		1	
3	589283402	FRAME TUBE		1	
4	584991002	TUBE		1	
5	522842902	PLATE		1	
6	586703801	FRONT COVER		1	
7	585523004	SUPPORT		1	
8	587546901	SCREW		1	
9	585916701	LIGHT		1	
10	587225201	GROMMET		2	
11	585989301	BUMPER		7	
12	585523104	CROSS MEMBER		1	
13	587458602	BRACKET		1	
14	585331602	COVER		1	
15	585331502	COVER		1	
16	539104411	KNOB		1	
17	585474302	BRACKET		2	
18	585523604	SUPPORT		1	
19	580501302	BRACKET		2	
20	585523404	SUPPORT		1	
21	586654301	BOLT		2	
22	586881101	BOLT		2	
23	874780536	BOLT		7	
24	874780544	BOLT		5	
25	874780648	BOLT		8	
26	585940001	BOLT		2	
27	577117701	SCREW		4	
28	532416358	SCREW		6	
29	532421756	SCREW		2	
30	817580520	BOLT		2	
31	521996501	NUT		6	
32	585938101	NUT		2	
33	873900500	NUT		2	
34	539112899	NUT, 5/16–18, NYLOC		9	
35	819111116	WASHER		6	
36	532423063	WASHER		1	

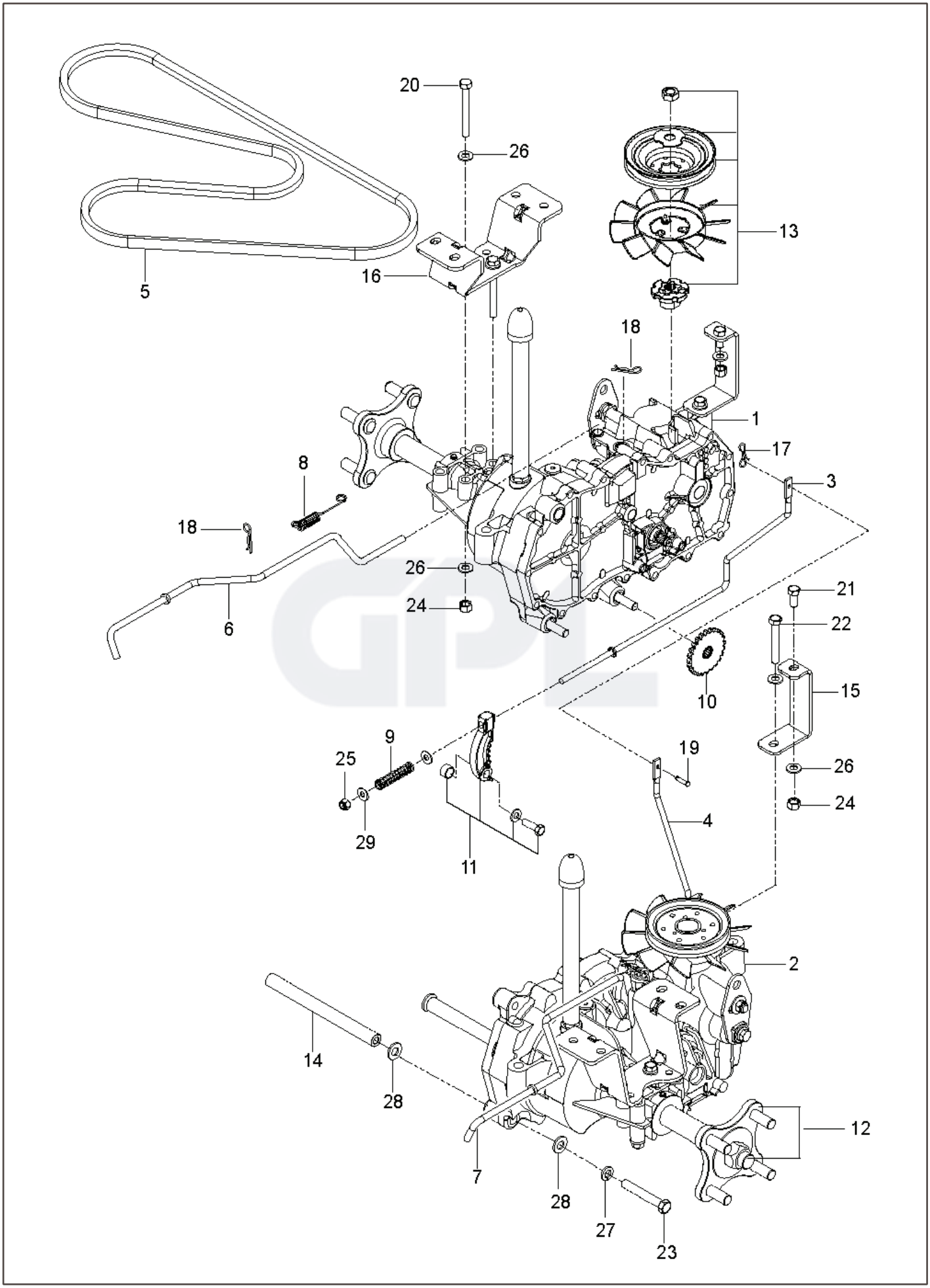
20
26
13
16
5
18
1
17
8
3
18
26
24
6
21
22
10
15
9
19
25
26
24
29
4
11
2
14
28
12
7
28
27
23

REF.	PART NO.	DESCRIPTION	REMARK	QTY.	KIT
1	510375601	TRANSMISSION		1	
2	510375602	TRANSMISSION		1	
3	574030501	LINKAGE		1	
4	574030502	LINKAGE		1	
5	539110411	BELT		1	
6	585474401	ROD		1	
7	585474501	ROD		1	
8	586665101	SPRING		2	
9	539110342	SPRING		2	
10	539120080	DISC		2	
11	539120079	ARM		2	
12	575507001	KIT		1	
13	501403602	TRANSMISSION KIT		2	
14	510184104	SPACING TUBE		2	
15	580806502	SUPPORT		2	
16	580806602	BRACKET		2	
17	587225301	PIN		1	
18	539976988	PIN		4	
19	587115301	PEN		1	
20	874780544	BOLT		4	
21	539976934	SCREW		2	
22	874780536	BOLT		2	
23	539990637	SCREW		4	
24	873800500	LOCK NUT		8	
25	539976978	NUT		2	
26	819111116	WASHER		16	
27	539990118	WASHER		4	
28	819131316	WASHER		8	
29	819091016	WASHER		4	

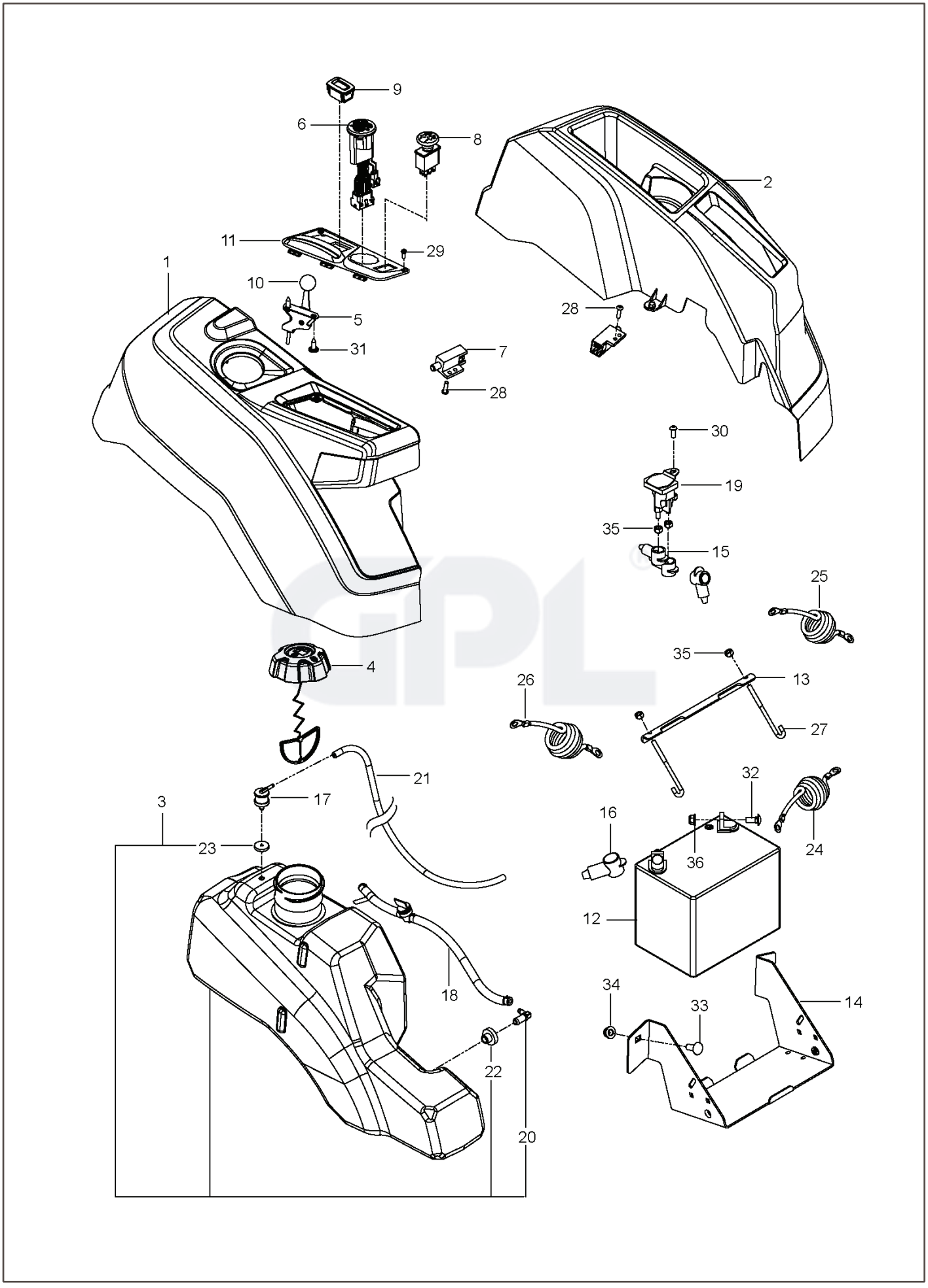
9
6
8
2
11
29
1
10
5
31
28
7
28
30
19
35
15
25
4
35
26
13
27
21
32
17
3
16
24
23
36
12
18
34
33
14
22
20

REF.	PART NO.	DESCRIPTION	REMARK	QTY.	KIT
1	585522801	CONSOLE ASSY		1	
2	586621201	CONSOLE ASSY		1	
3	578180602	FUEL TANK ASSY	Fits 2.75" filler neck	1	
4	529989702	CAP	Fits 2.00" filler neck	1	
4	585124801	FUEL CAP ASSY	Fits 2.75" filler neck	1	
5	585974902	CABLE		1	
6	586836704	SWITCH		1	
7	587601501	SWITCH		2	
8	582107602	SWITCH		1	
9	586161801	HOUR METER		1	
10	539133049	KNOB ROUND BALL		1	
11	585522703	CONTROL PANEL		1	
12	539102436	BATTERY		1	
13	510030003	BRACKET		1	
14	582609602	BOX		1	
15	532131563	COVER		3	
16	539102759	INSULATOR		1	
17	576618101	TANK VENT		1	
18	586123904	FUEL HOSE		1	
19	582042801	SOLENOID		1	
20	532139277	NIPPLE		1	
21	587044523	HOSE		1	
22	532003645	BUSHING		1	
23	532437492	GROMMET		1	
24	585734303	CABLE		1	
25	586108201	HARNESS		1	
26	585306904	CABLE		1	
27	588839401	HOOK		2	
28	586936001	SCREW		2	
29	545227101	SCREW		2	
30	539111229	SCR 1/4–20 X 5/8 BTN SKT HD ZD		1	
31	532141841	SCREW		2	
32	872140506	BOLT		2	
33	539990645	BOLT		2	
34	521996501	NUT		2	
35	539976978	NUT		5	
36	539112899	NUT, 5/16–18, NYLOC		2	
	587232102	HARNESS	NOT SHOWN	1	
	586548101	HARNESS		1	
	532109748	RELAY		1	

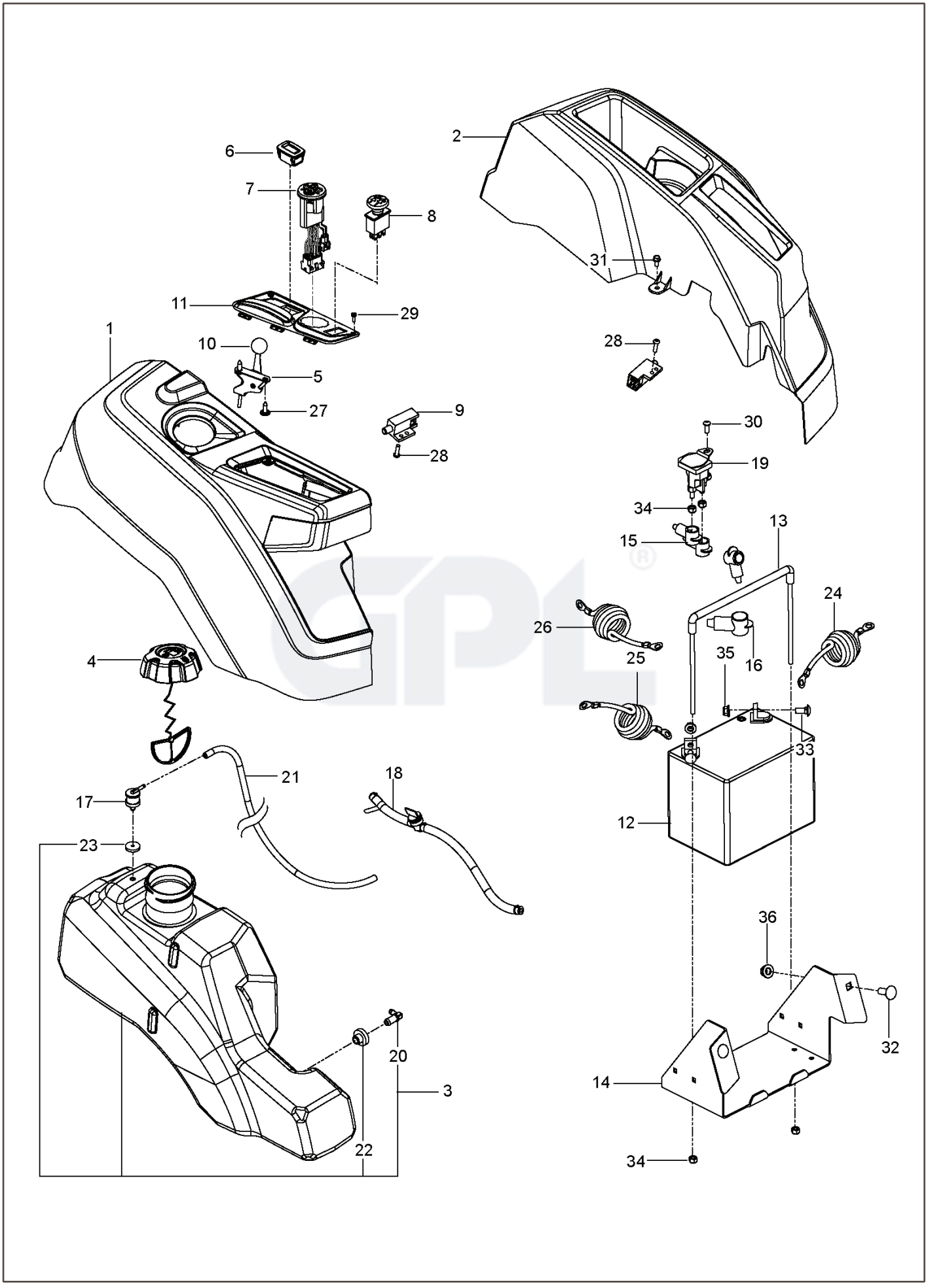
1
2
3
4
5
6
7
8
9
10
11
12
13
14
15
16
17
18
19
20
21
22
23
24
25
26
27
28
29
30
31
32
33
34
35
36

REF.	PART NO.	DESCRIPTION	REMARK	QTY.	KIT
1	585522801	CONSOLE ASSY		1	
2	586621201	CONSOLE ASSY		1	
3	578180602	FUEL TANK ASSY	Fits 2.75" filler neck	1	
4	585124801	FUEL CAP ASSY	Fits 2.75" filler neck	1	
4	529989702	CAP	Fits 2.00" filler neck	1	
5	585974902	CABLE		1	
6	586161801	HOUR METER		1	
7	586836704	SWITCH		1	
8	582107602	SWITCH		1	
9	587601501	SWITCH		2	
10	539133049	KNOB ROUND BALL		1	
11	585522703	CONTROL PANEL		1	
12	539102436	BATTERY		1	
13	539131209	BATTERY TIE DOWN ASSEMBLY		1	
14	585048702	BOX		1	
15	532131563	COVER		3	
16	539102759	INSULATOR		1	
17	576618101	TANK VENT		1	
18	586123904	FUEL HOSE		1	
19	532192507	SOLENOID		1	
20	532139277	NIPPLE		1	
21	576660608	HOSE		1	
22	532003645	BUSHING		1	
23	532437492	GROMMET		1	
24	586108201	HARNESS		1	
25	585306904	CABLE		1	
26	585734303	CABLE		1	
27	532141841	SCREW		2	
28	574822701	SCREW		2	
29	545227101	SCREW		2	
30	539111229	SCR 1/4–20 X 5/8 BTN SKT HD ZD		1	
31	817490408	SCREW		2	
32	539990645	BOLT		2	
33	872140506	BOLT		2	
34	873800400	NUT		5	
35	539112899	NUT, 5/16–18, NYLOC		2	
36	521996501	NUT		2	
	587232102	HARNESS	NOT SHOWN	1	
	532109748	RELAY		1	

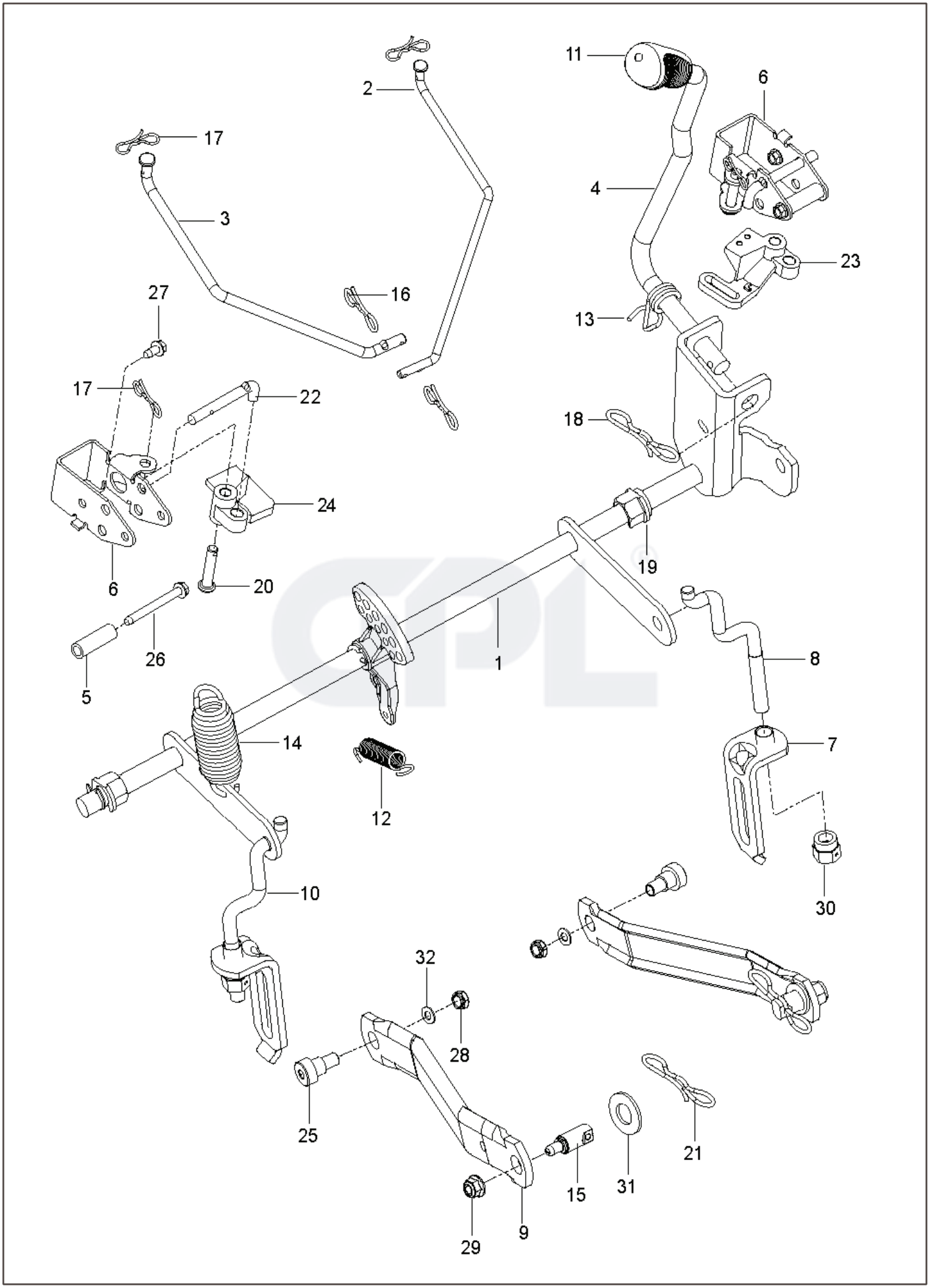
11
6
2
17
4
3
23
27
16
13
17
22
18
24
6
20
19
26
1
8
5
14
12
7
30
10
32
28
25
15
31
21
29
9

REF.	PART NO.	DESCRIPTION	REMARK	QTY.	KIT
1	587623101	SHAFT ASSY		1	15, 23
2	586457101	LINK		1	
3	586457201	LINK		1	
4	587622901	LIFTING LEVER ASSY		1	8, 10, 13
5	580486101	SPACER		2	
6	585682102	BRACKET		2	
7	522858601	ASSEMBLY		2	
8	525847201	LINK		2	
9	587140502	ARM		2	
10	587623001	LINK ASSY		2	
11	532445060	LEVER		2	
12	586867601	SPRING		4	
13	532196314	SPRING		1	
14	539118762	SPRING		2	
15	532195161	STUD		2	
16	532194208	PIN		2	
17	587225301	PIN		4	
18	532194209	SPRING		1	
19	510184901	BUSHING		2	
20	585701401	PIN		2	
21	532194209	SPRING		2	
22	585682001	ROD		2	
23	586457401	BELLCRANK		1	
24	586457501	BELLCRANK		1	
25	539113621	SB 3/8–16 X 3/8 SKT HD ZD		2	
26	586561301	SCREW		2	
27	532137729	SCREW		2	
28	539200282	NUT		2	
29	539112899	NUT, 5/16–18, NYLOC		2	
30	532175994	NUT		2	
31	819212113	WASHER		2	
32	819131316	WASHER		2	

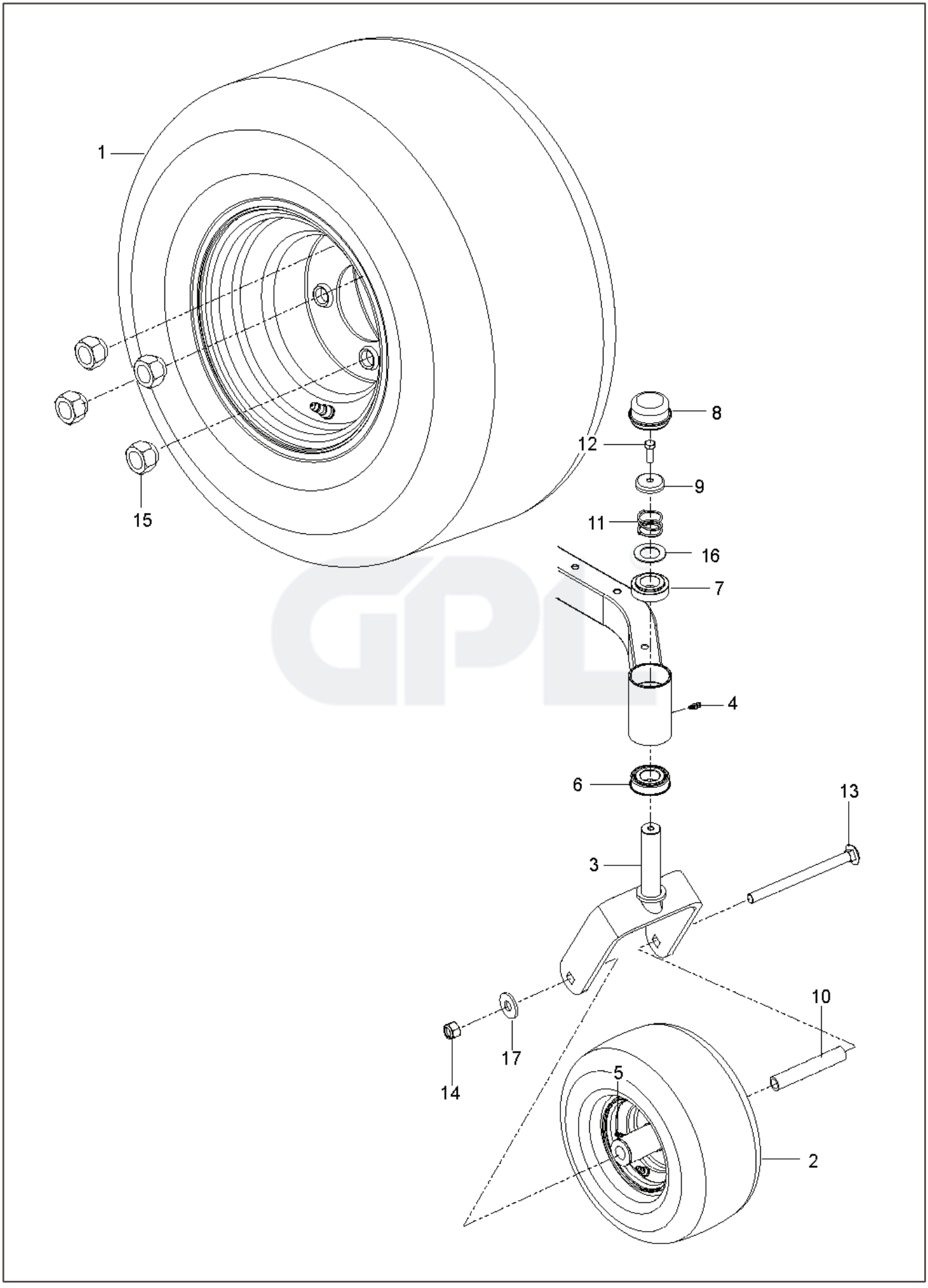
1
15
8
12
9
11
16
7
4
6
13
3
10
17
14
5
2

REF.	PART NO.	DESCRIPTION	REMARK	QTY.	KIT
1	590486601	WHEEL		2	
2	576588602	WHEEL ASSY		2	
3	586650302	YOKE		2	
4	539115638	FITTING		2	
5	539103300	NIPPLE		2	
6	539112660	BEARING		2	
7	539117901	BUSHING		2	
8	539102535	CAP		2	
9	539115749	CASTER PLUG		2	
10	576588901	SPACER		2	
11	539115747	SPRING		2	
12	874950516	SCREW		2	
13	576601501	SCREW		2	
14	873930800	NUT	Nut 1/2–13 Hex Center Lock (595316501)	2	
15	587653902	NUT		8	
16	539115675	WASHER		2	
17	819182212	WASHER		2	

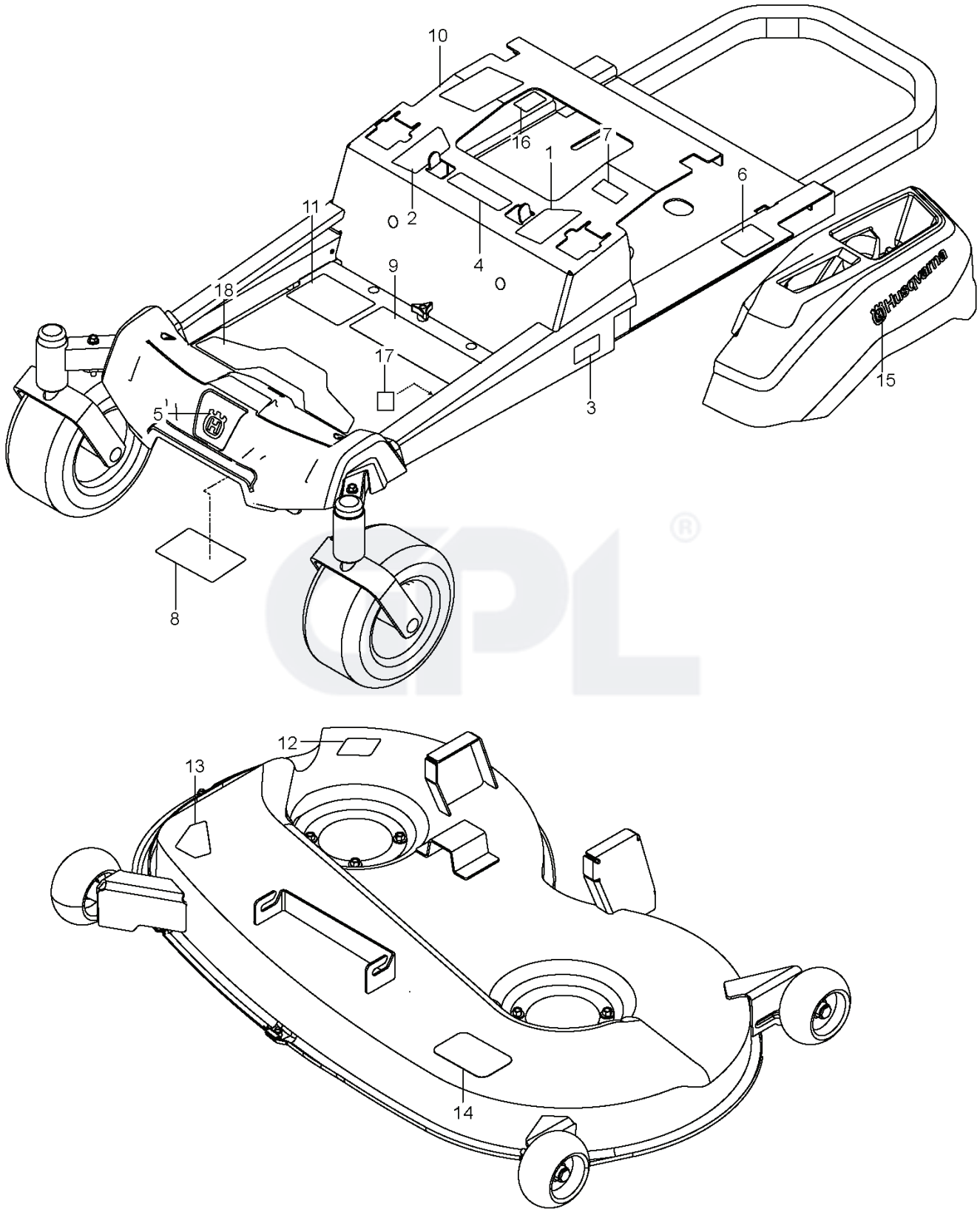
10
16
7
1
6
11
2
4
9
18
17
3
15
5
8
12
13
14

REF.	PART NO.	DESCRIPTION	REMARK	QTY.	KIT
1	587595601	DECAL	STEER / BRAKE LT	1	
2	587595501	DECAL	STEER / BRAKE RT	1	
3	587865501	DECAL	Z 246i	2	
4	539105745	DECAL	BATTERY WARNING	1	
5	532428677	DECAL	CROWN	1	
6	539108385	DECAL	DO NOT TOW	1	
7	539108386	DECAL	EXIT MOWER	1	
8	539109897	DECAL	SERVICE	1	
9	583934001	DECAL	SAFETY WARNINGS	1	
10	532423829	DECAL	RESPONSIBILITY	1	
11	588701501	DECAL	START SS	1	
12	581724401	DECAL	DEFLECTOR	1	
13	584904601	DECAL	BLADE DANGER	1	
14	510240201	DECAL	BELT ROUTING	1	
15	577469001	DECAL	HUSQVARNA	2	
16	501082601	DECAL	ECM AUST	1	
17	581724102	DECAL	80 DBA	1	
18	587000701	PAD		1	