Z 248F, 967262401-00, 2016-11

SPARE PARTS LIST

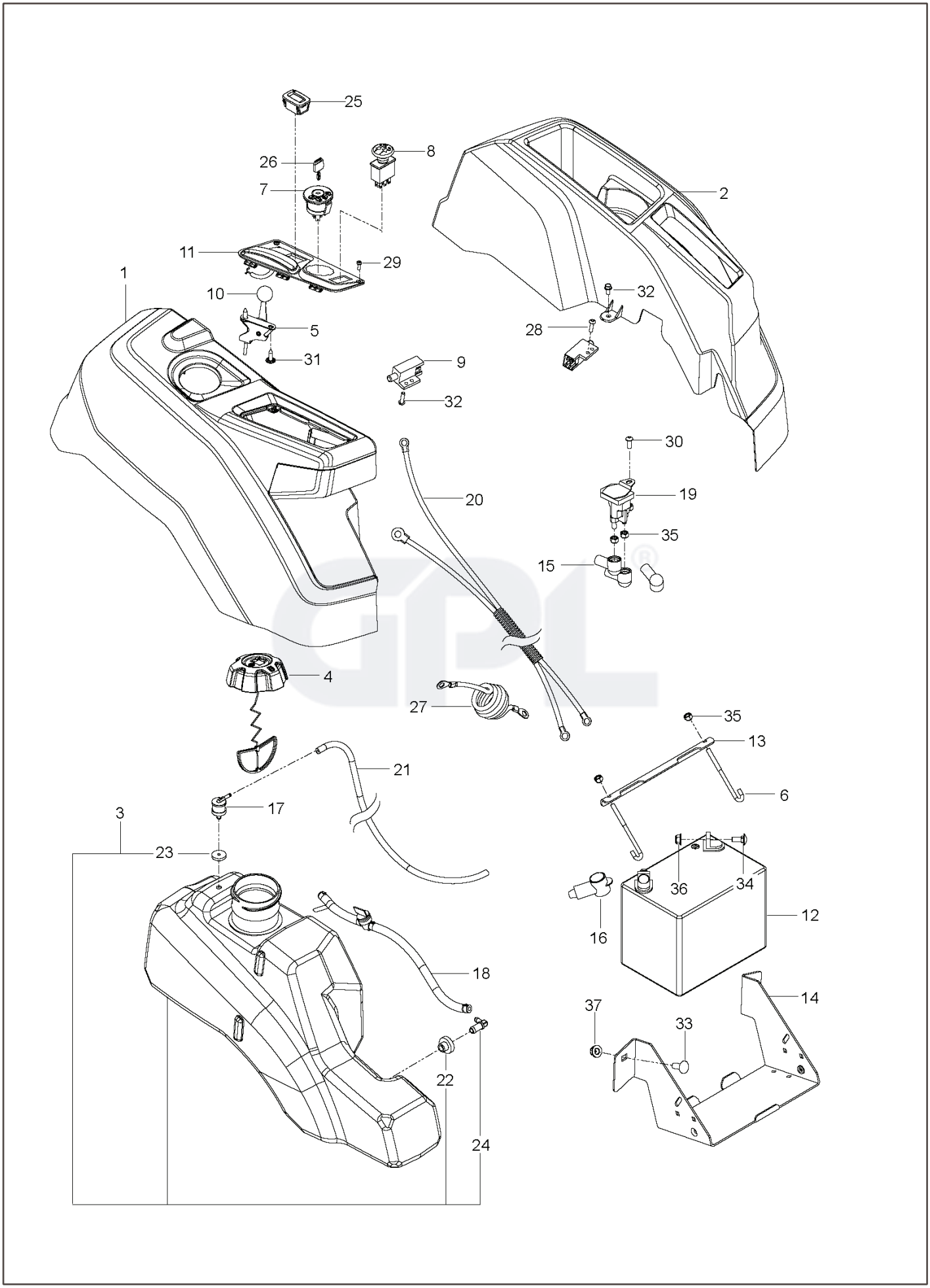
25
26
8
7
2
11
29
1
10
32
5
28
31
9
32
30
20
19
35
15
4
27
35
13
21
6
17
3
23
36
34
12
16
18
14
37
33
22
24

REF.	PART NO.	DESCRIPTION	REMARK	QTY.	KIT
1	585522801	CONSOLE ASSY		1	
2	586621201	CONSOLE ASSY		1	
3	578180602	FUEL TANK ASSY	Fits 2.75" filler neck	1	
4	585124801	FUEL CAP ASSY	Fits 2.75" filler neck	1	
4	529989702	CAP	Fits 2.00" filler neck	1	
5	585974902	CABLE		1	
6	588839401	HOOK		2	
7	539107541	IGNITION SWITCH		1	
8	582107602	SWITCH		1	
9	587601501	SWITCH		2	
10	539133049	KNOB ROUND BALL		1	
11	585522703	CONTROL PANEL		1	
12	579411601	BATTERY		1	
13	510030003	BRACKET		1	
14	582609602	BOX		1	
15	532131563	COVER		3	
16	539102759	INSULATOR		1	
17	576618101	TANK VENT		1	
18	586123906	FUEL HOSE		1	
19	582042801	SOLENOID		1	
20	587198601	HARNESS		1	
21	587044518	HOSE		1	
22	532003645	BUSHING		1	
23	532437492	GROMMET		1	
24	532139277	NIPPLE		1	
25	586161801	HOUR METER		1	
26	532140401	KEY		1	
27	586108201	HARNESS		1	
29	545227101	SCREW		2	
30	539111229	SCR 1/4–20 X 5/8 BTN SKT HD ZD		1	
31	532141841	SCREW		2	
32	817490408	SCREW		2	
33	539990645	BOLT		2	
34	872140506	BOLT		2	
35	873800400	NUT		5	
36	539112899	NUT, 5/16–18, NYLOC		2	
37	521996501	NUT		2	
	586337301	HARNESS	NOT SHOWN	1	
	532109748	RELAY	NOT SHOWN	1	

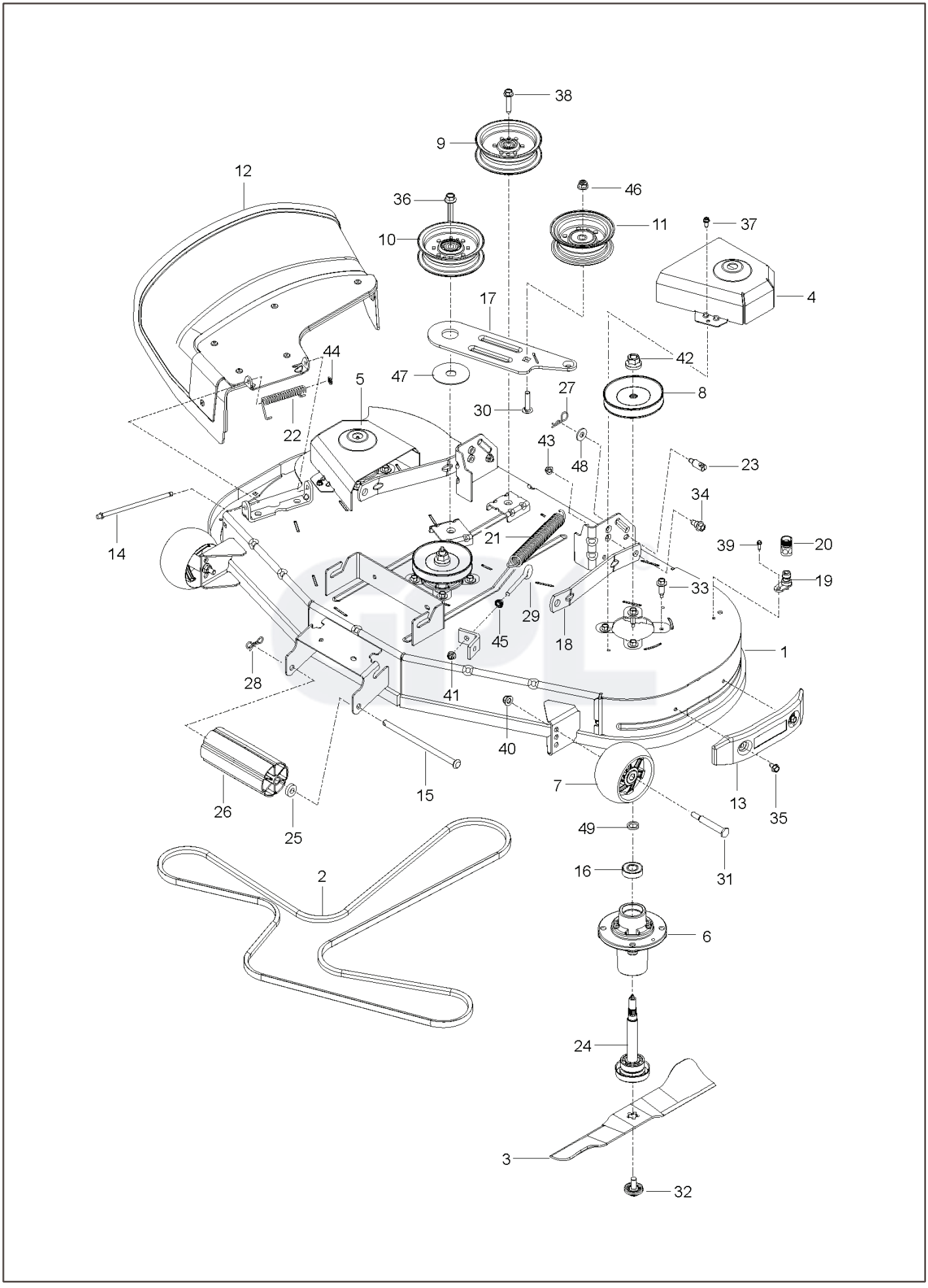
38
9
12
46
36
11
37
10
4
17
42
44
47
8
5
27
30
22
43
48
23
34
14
21
39
20
19
33
29
45
18
1
28
41
40
7
13
35
26
25
15
49
31
16
2
6
24
3
32

REF.	PART NO.	DESCRIPTION	REMARK	QTY.	KIT
1	588781302	DECK SHELL ASSY		1	
2	582558001	BELT		1	
3	588811002	BLADE		2	
4	588812802	COVER		1	
5	588812402	COVER		1	
6	539112170	HOUSING ASSY		3	
7	589527301	WHEEL		2	
8	532173435	PULLEY		3	
9	532196106	PULLEY		1	
10	532196104	PULLEY		1	
11	532193197	PULLEY		1	
12	588980701	DEFLECTOR ASSY		1	
13	582541101	BUMPER		1	
14	532131491	SHAFT		2	
15	532179127	ROD ROLLER NOSE		1	
16	532110485	BEARING		2	
17	588812202	ARM		1	
18	587140502	ARM		2	
19	532415598	HOSE COUPLING		1	
20	532416405	COUPLING		1	
21	582504001	SPRING		1	
22	587354701	SPRING		1	
23	532195161	STUD		2	
24	532187291	SHAFT		3	
25	582360501	BUSHING		1	
26	532176066	ROLLER		1	
27	539976989	SPLIT PIN		2	
28	532194208	PIN		1	
29	539115574	EYE BOLT		1	
30	872110614	BOLT		1	
31	532193406	BOLT		2	
32	532193003	SCREW		2	
33	584953901	BOLT		12	
34	532196539	BOLT		2	
35	532170165	BOLT		2	
36	588438301	SCREW		1	
37	532137729	SCREW		4	
38	817490628	SCREW		1	
39	817490410	SCREW		1	
40	521996501	NUT		2	
41	539112899	NUT, 5/16–18, NYLOC		1	
42	532400234	NUT		3	
43	873900500	NUT		2	
44	532110452	NUT		1	
45	539990585	NUT		1	
46	873680600	NUT		1	
47	532178515	WASHER		1	
48	819212113	WASHER		2	
49	532187690	WASHER		3	

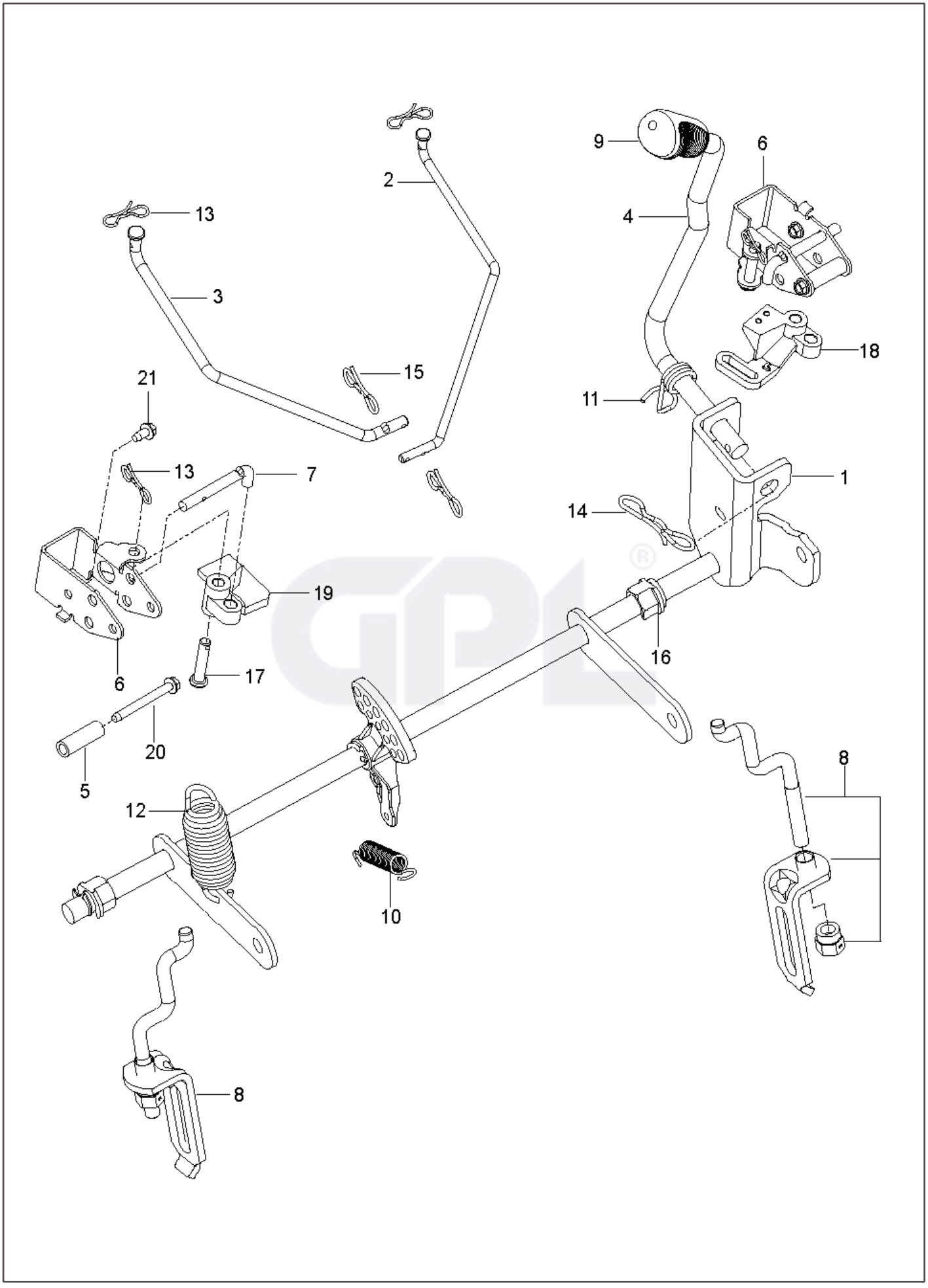
9
6
2
4
13
3
18
15
21
11
13
7
1
14
19
16
6
17
20
5
8
12
10
8

REF.	PART NO.	DESCRIPTION	REMARK	QTY.	KIT
1	587623101	SHAFT ASSY		1	
2	586457101	LINK		1	
3	586457201	LINK		2	
4	587622901	LIFTING LEVER ASSY		1	9, 11, 14
5	580486101	SPACER		2	
6	585682102	BRACKET		2	
7	585682001	ROD		2	
8	587623001	LINK ASSY		2	
9	532445060	LEVER		1	
10	586867601	SPRING		1	
11	532196314	SPRING		1	
12	539118762	SPRING		1	
13	587225301	PIN		4	
14	532196314	SPRING		1	
15	532194208	PIN		2	
16	510184901	BUSHING		2	
17	585701401	PIN		2	
18	586457401	BELLCRANK		1	
19	586457501	BELLCRANK		1	
20	586561301	SCREW		2	
21	532137729	SCREW		2	

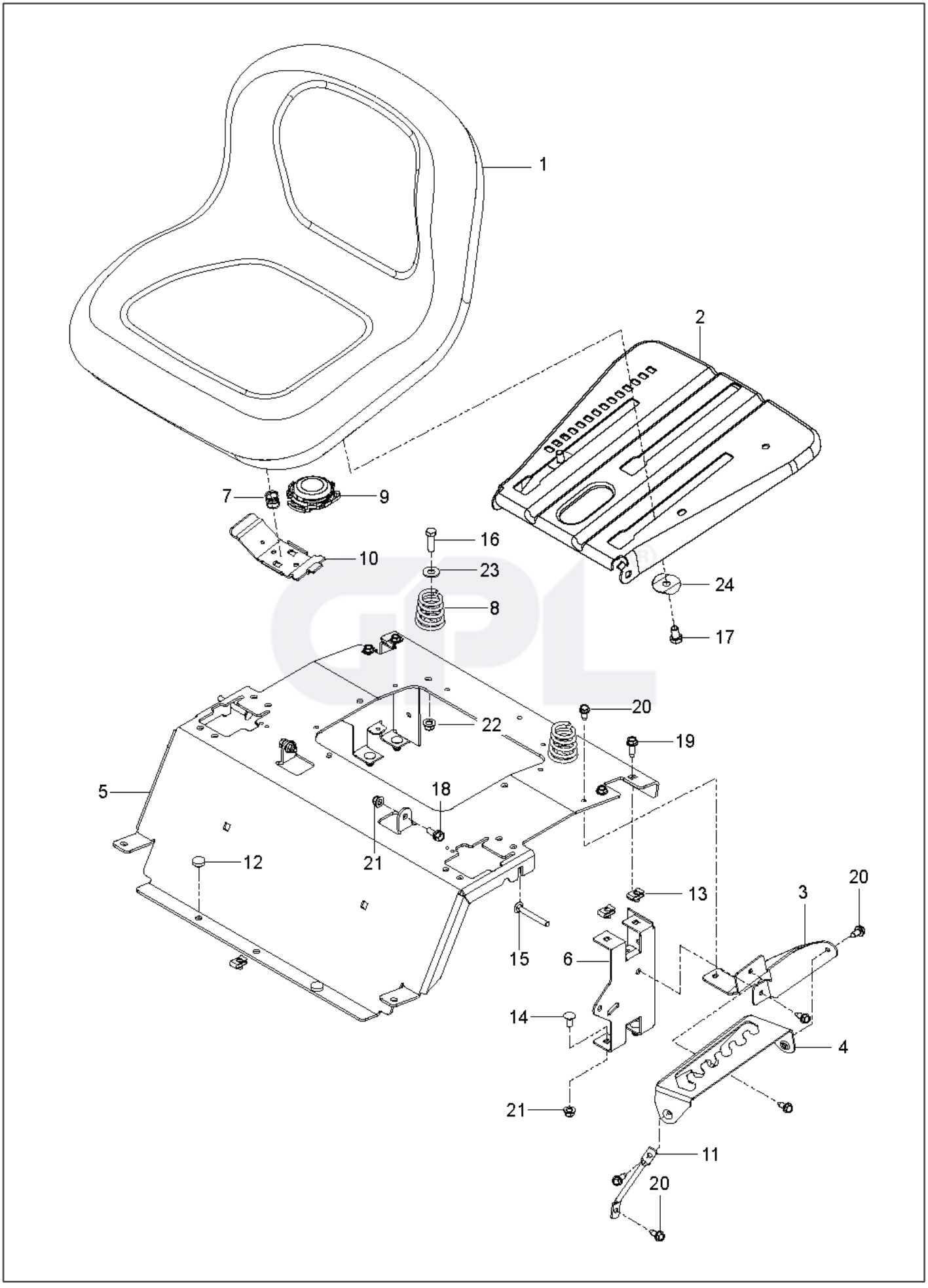
1
2
7
9
10
16
23
8
24
17
20
22
19
5
18
21
12
13
3
20
15
6
14
4
21
11
20

REF.	PART NO.	DESCRIPTION	REMARK	QTY.	KIT
1	532439822	SEAT		1	9
2	587232002	PLATE		1	
3	586220802	SUPPORT PLATE		1	
4	586221202	PLATE		1	
5	589761206	PLATE		1	
6	580308202	SUPPORT		2	
7	532198200	SPRING		1	
8	589483501	SPRING		2	
9	581429302	SWITCH		1	
10	532197661	HANDLE		1	
11	586428601	SUPPORT LEG		1	
12	585989301	BUMPER		2	
13	539104763	CLIP		5	
14	872140506	BOLT		4	
15	510422701	SCREW		2	
16	874780620	BOLT		2	
17	874760612	BOLT		1	
18	539110303	BOLT		2	
19	817490512	SCREW		4	
20	817000510	BOLT		6	
21	539112899	NUT, 5/16–18, NYLOC		4	
22	521996501	NUT		2	
23	819141614	WASHER		2	
24	501051801	WASHER		2	
	532421499	ARM REST		1	

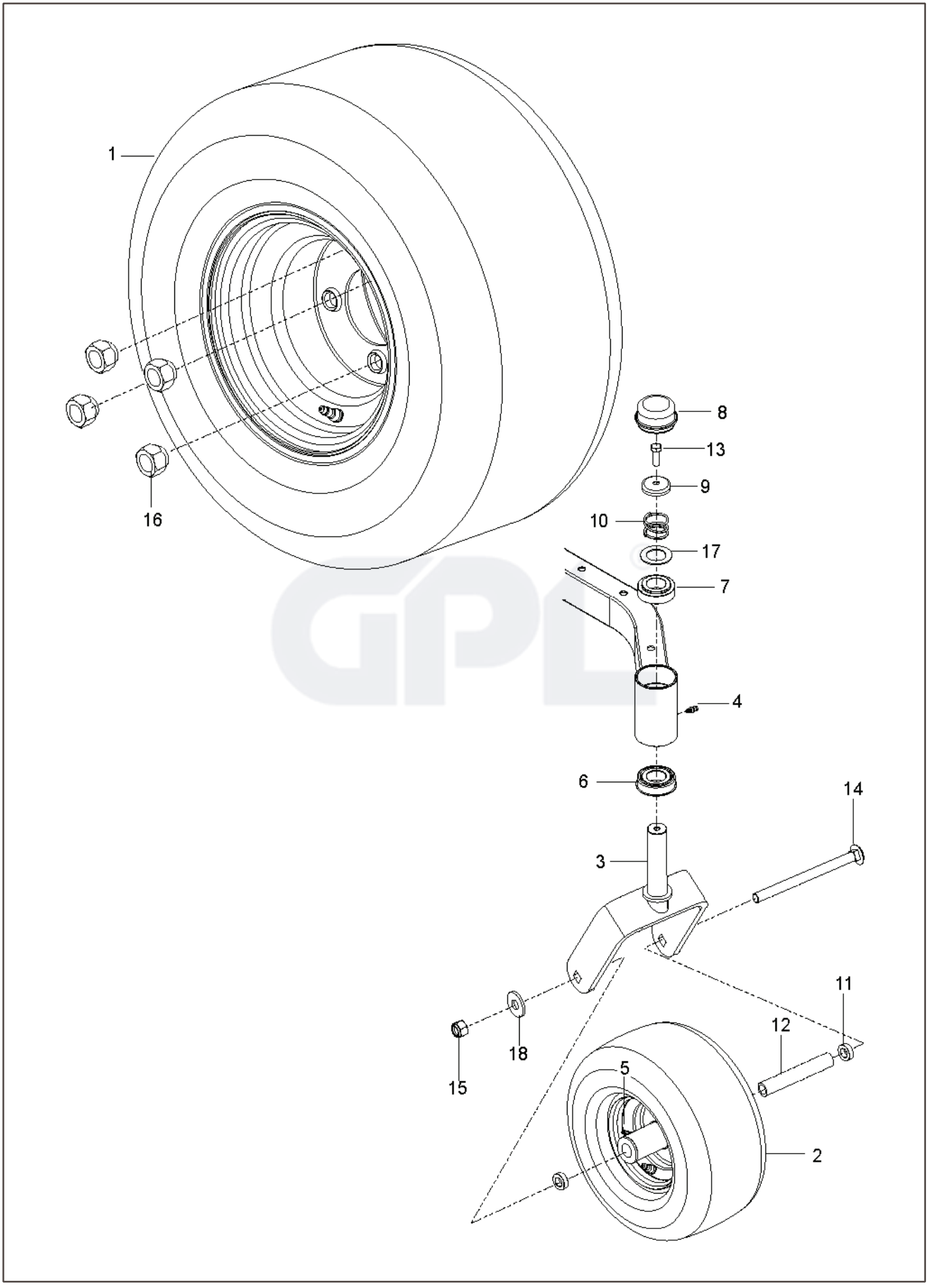
1
16
8
13
9
10
17
7
4
6
14
3
11
12
18
15
5
2

REF.	PART NO.	DESCRIPTION	REMARK	QTY.	KIT
1	590486601	WHEEL		2	
2	590486802	WHEEL		3	
3	510186505	YOKE		2	
4	539115638	FITTING		2	
5	539103300	NIPPLE		2	
6	539112660	BEARING		2	
7	539117901	BUSHING		2	
8	539102535	CAP		2	
9	539115749	CASTER PLUG		2	
10	539115747	SPRING		2	
11	581269201	SPACER		2	
12	576588901	SPACER		2	
13	874950516	SCREW		2	
14	721408104	CLIP		2	
15	873930800	NUT		2	
16	587653902	NUT		8	
17	539115675	WASHER		2	
18	819182212	WASHER		1	

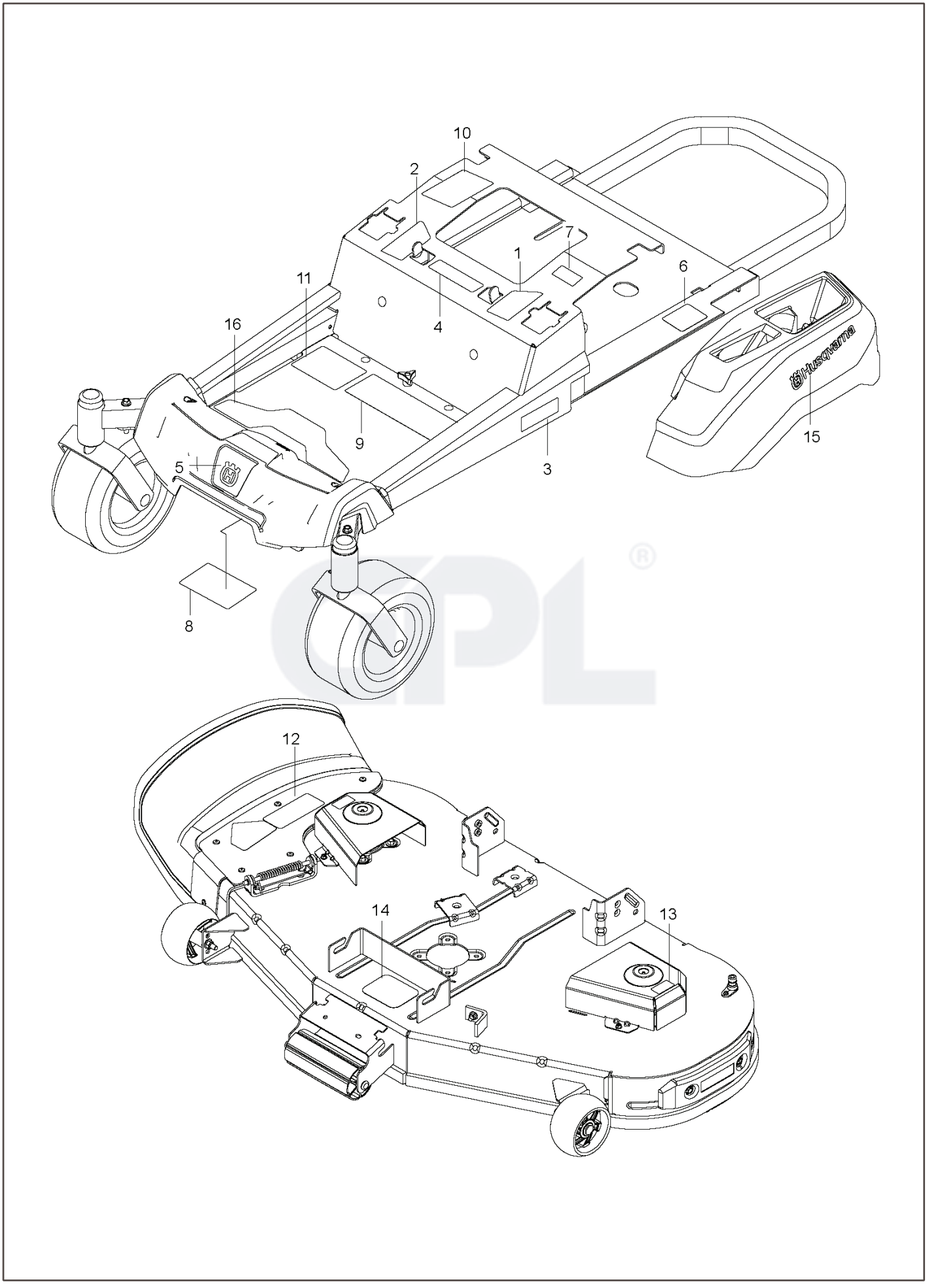
10
2
7
1
6
11
16
4
9
3
15
5
8
12
14
13

REF.	PART NO.	DESCRIPTION	REMARK	QTY.	KIT
1	587595601	DECAL		1	
2	587595501	DECAL		1	
3	587220301	DECAL		2	
4	539105745	DECAL		1	
5	532428677	DECAL		1	
6	539108385	DECAL		1	
7	539108386	DECAL		1	
8	539109897	DECAL		1	
9	590485501	DECAL		1	
10	532423829	DECAL		1	
11	588035001	DECAL		1	
12	586978801	DECAL		1	
13	589357901	DECAL		1	
14	539112620	DECAL		1	
15	577469001	DECAL		2	
16	587000701	PAD		1	

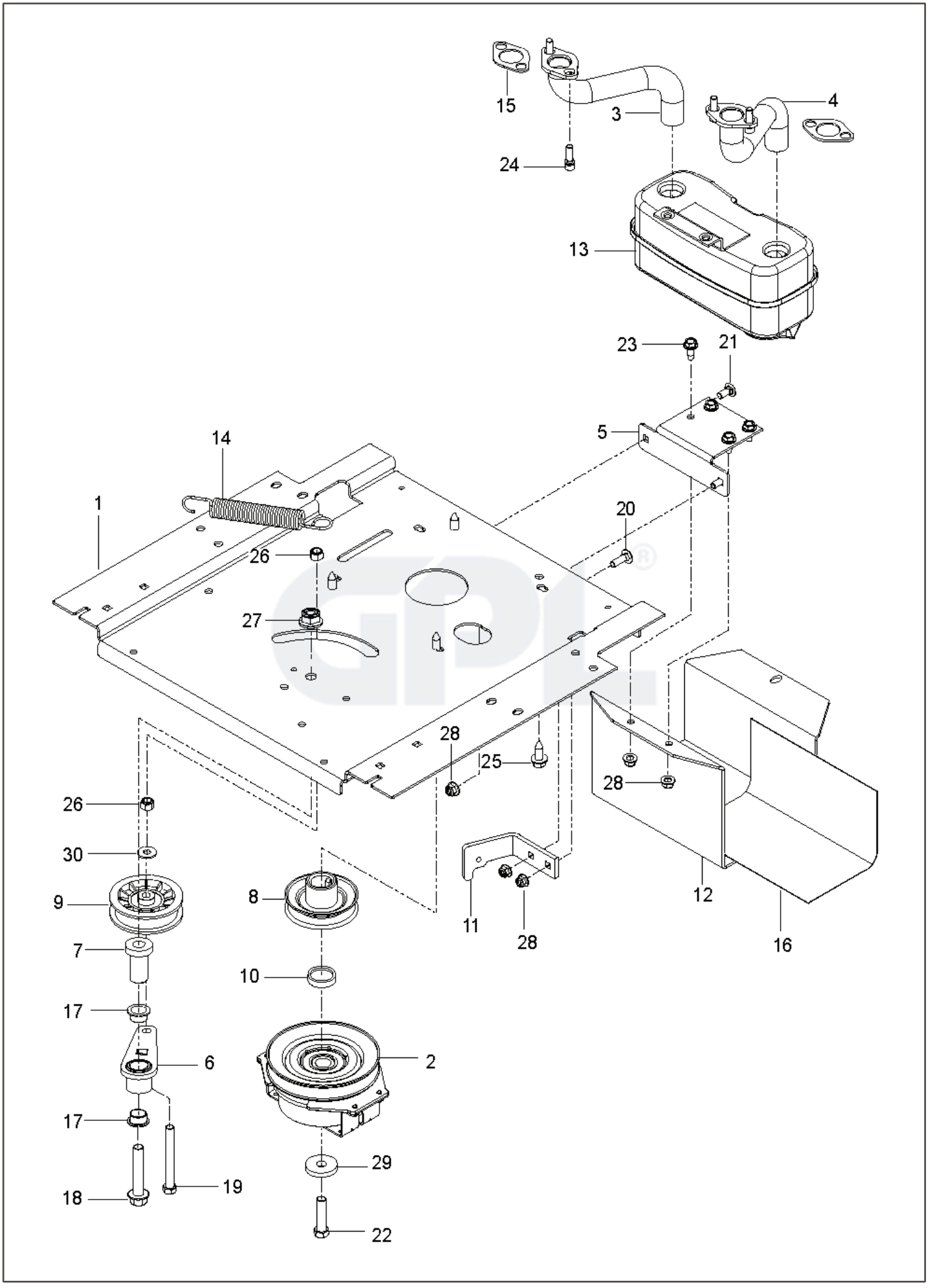
15
3
4
24
13
23
21
5
14
1
20
26
27
28
25
28
26
30
9
8
7
10
17
6
2
17
18
19
29
22
11
28
12
16

REF.	PART NO.	DESCRIPTION	REMARK	QTY.	KIT
1	588017102	PLATE		1	
2	587241601	CLUTCH		1	
3	581881101	TUBE		1	
4	581881001	TUBE		1	
5	581886702	BRACKET		1	
6	532448145	ARM		1	
7	582538901	SPINDLE		1	
8	587537401	PULLEY		1	
9	539110311	PULLEY		1	
10	587660101	SPACER		1	
11	587633302	STOP		1	
12	587451202	GUARD		1	
13	539131604	MUFFLER ASSY		1	
14	532196105	SPRING		1	
15	532165391	GASKET		2	
16	539132859	HEAT SHIELD		1	
17	501603701	BEARING		2	
18	582539501	BOLT		1	
19	874520656	BOLT		1	
20	872140508	BOLT		2	
21	872140506	BOLT		2	
22	581332803	BOLT		1	
23	817490512	SCREW		4	
24	532183906	SCREW		4	
25	539976979	NUT		2	
26	521991101	NUT		1	
27	539112899	NUT, 5/16–18, NYLOC		1	
28	539976979	NUT		2	
29	532126197	WASHER		2	
30	539990692	WASHER		1	
	000000000	W/O DESCRIPTION	Engine, Briggs & Stratton 44T877 24 HP. For engine replacement parts, see a B&S dealer.	1	

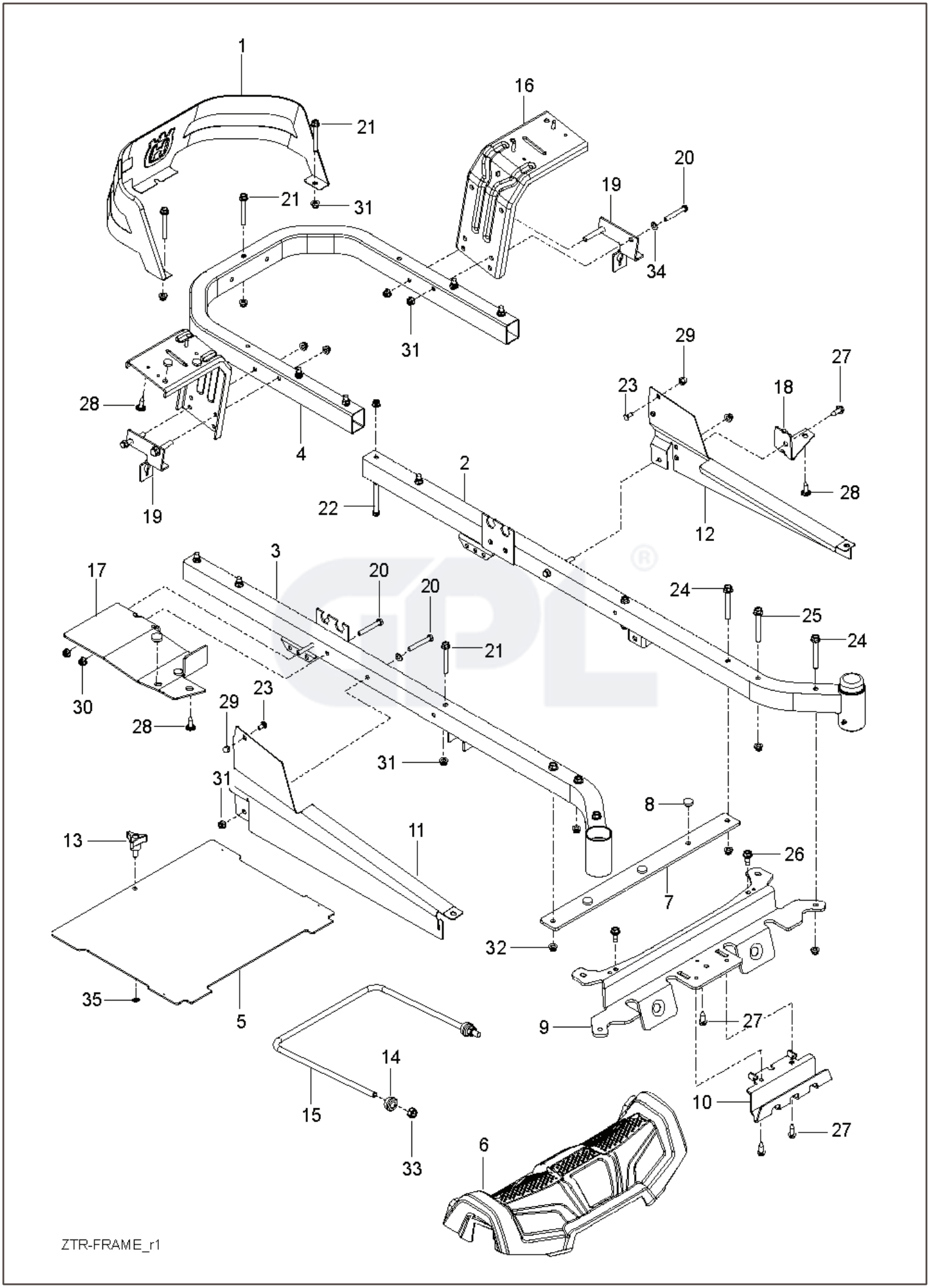
1
16
21
21
31
20
19
34
31
29
27
23
18
28
4
2
22
12
28
19
3
17
20
20
24
25
24
21
30
28
29
23
31
31
8
13
11
26
7
32
35
5
9
27
14
10
15
27
33
6
ZTR-FRAME_r1

REF.	PART NO.	DESCRIPTION	REMARK	QTY.	KIT
1	585039802	GUARD		1	
2	589283402	FRAME TUBE		1	
3	589283302	FRAME TUBE		1	
4	584991002	TUBE		1	
5	522842902	PLATE	for 967844601-00	1	
5	598712401	PLATE KIT	for 970467601-00	1	
6	585522401	FRONT COVER		1	
7	585523004	SUPPORT		1	
8	585989301	BUMPER		7	
9	585523104	CROSS MEMBER		1	
10	585523204	SKID PLATE		1	
11	585331602	COVER		1	
12	585331502	COVER		1	
13	539104411	KNOB		1	
14	532195263	BUSHING		2	
15	521938101	LINK		1	
16	580501302	BRACKET		2	
17	585523404	SUPPORT		1	
18	585523604	SUPPORT		1	
19	585474302	BRACKET		2	
20	874780536	BOLT		8	
21	874490544	SCREW		5	
22	874780648	BOLT		8	
23	585940001	BOLT		2	
24	577117701	SCREW		4	
25	586654301	BOLT		2	
26	586881101	BOLT		2	
27	817000510	BOLT		4	
28	532416358	SCREW		6	
29	585938101	NUT		2	
30	873900500	NUT		2	
31	539112899	NUT, 5/16-18, NYLOC		9	
32	521996501	NUT		8	
33	539119124	NUT		2	
34	819111116	WASHER		6	
35	532423063	WASHER		1	