Z 248F, 967336701-00, 2015-01

SPARE PARTS LIST

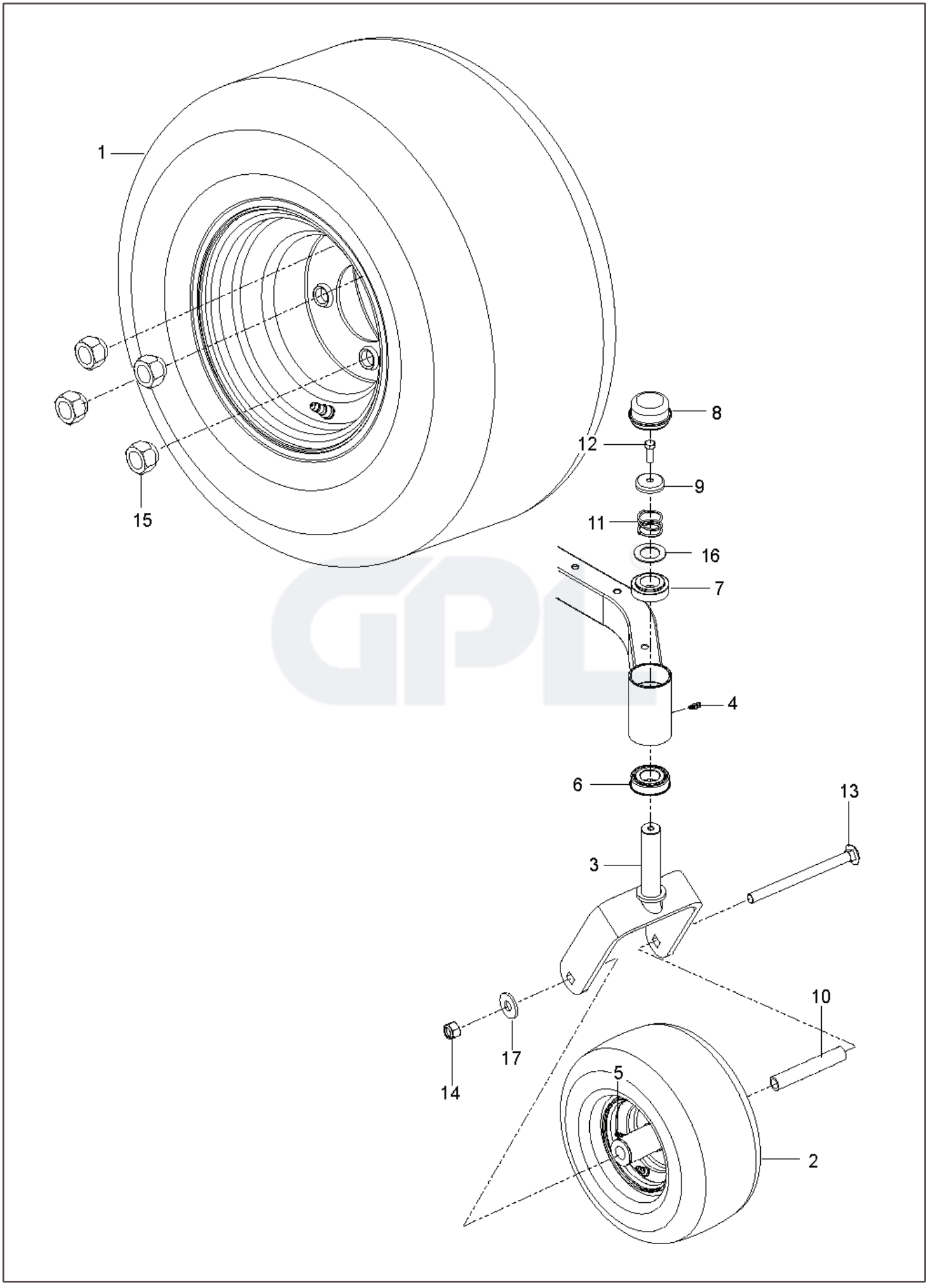
1
15
8
12
9
11
16
7
4
6
13
3
10
17
14
5
2

REF.	PART NO.	DESCRIPTION	REMARK	QTY.	KIT
1	590486601	WHEEL		2	
2	576588602	WHEEL ASSY		2	
3	586650302	YOKE		2	
4	539115638	FITTING		2	
5	539103300	NIPPLE		2	
6	539112660	BEARING		2	
7	539117901	BUSHING		2	
8	539102535	CAP		2	
9	539115749	CASTER PLUG		2	
10	576588901	SPACER		2	
11	539115747	SPRING		2	
12	874950516	SCREW		2	
13	576601501	SCREW		2	
14	873930800	NUT	Nut 1/2–13 Hex Center Lock (595316501)	2	
15	587653902	NUT		8	
16	539115675	WASHER		2	
17	819182212	WASHER		2	

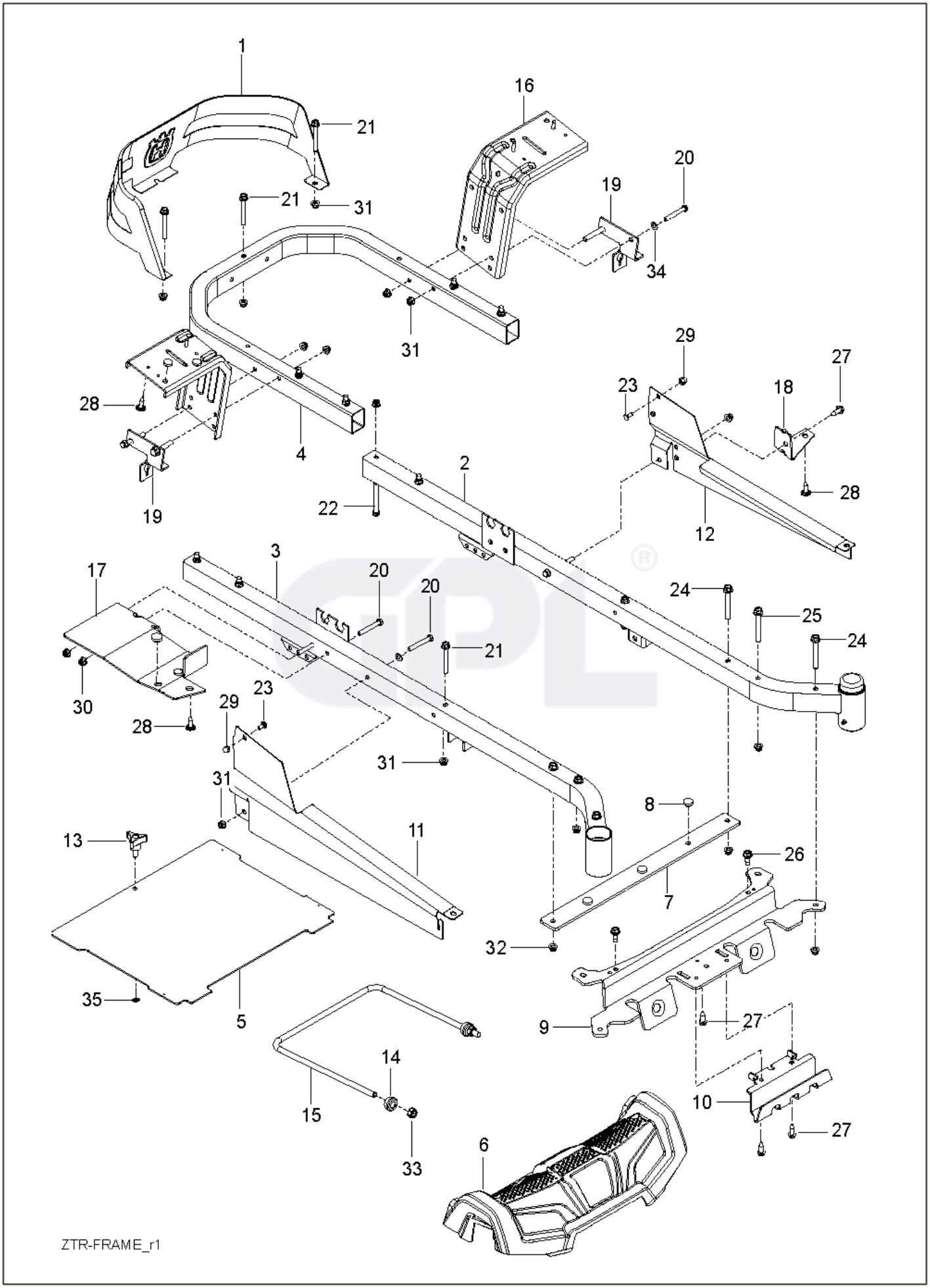
1
16
21
21
31
20
19
34
31
29
27
23
18
28
4
2
22
12
28
19
3
17
20
20
24
25
24
21
30
28
29
23
31
31
8
13
11
26
7
32
35
5
9
27
14
10
15
27
33
6
ZTR-FRAME_r1

REF.	PART NO.	DESCRIPTION	REMARK	QTY.	KIT
1	585039802	GUARD		1	
2	589283402	FRAME TUBE		1	
3	589283302	FRAME TUBE		1	
4	584991002	TUBE		1	
5	598712401	PLATE KIT	for 970467601-00	1	
5	522842902	PLATE	for 967844601-00	1	
6	585522401	FRONT COVER		1	
7	585523004	SUPPORT		1	
8	585989301	BUMPER		7	
9	585523104	CROSS MEMBER		1	
10	585523204	SKID PLATE		1	
11	585331602	COVER		1	
12	585331502	COVER		1	
13	539104411	KNOB		1	
14	532195263	BUSHING		2	
15	521938101	LINK		1	
16	580501302	BRACKET		2	
17	585523404	SUPPORT		1	
18	585523604	SUPPORT		1	
19	585474302	BRACKET		2	
20	874780536	BOLT		8	
21	874490544	SCREW		5	
22	874780648	BOLT		8	
23	585940001	BOLT		2	
24	577117701	SCREW		4	
25	586654301	BOLT		2	
26	586881101	BOLT		2	
27	817000510	BOLT		4	
28	532416358	SCREW		6	
29	585938101	NUT		2	
30	873900500	NUT		2	
31	539112899	NUT, 5/16-18, NYLOC		9	
32	521996501	NUT		8	
33	539119124	NUT		2	
34	819111116	WASHER		6	
35	532423063	WASHER		1	

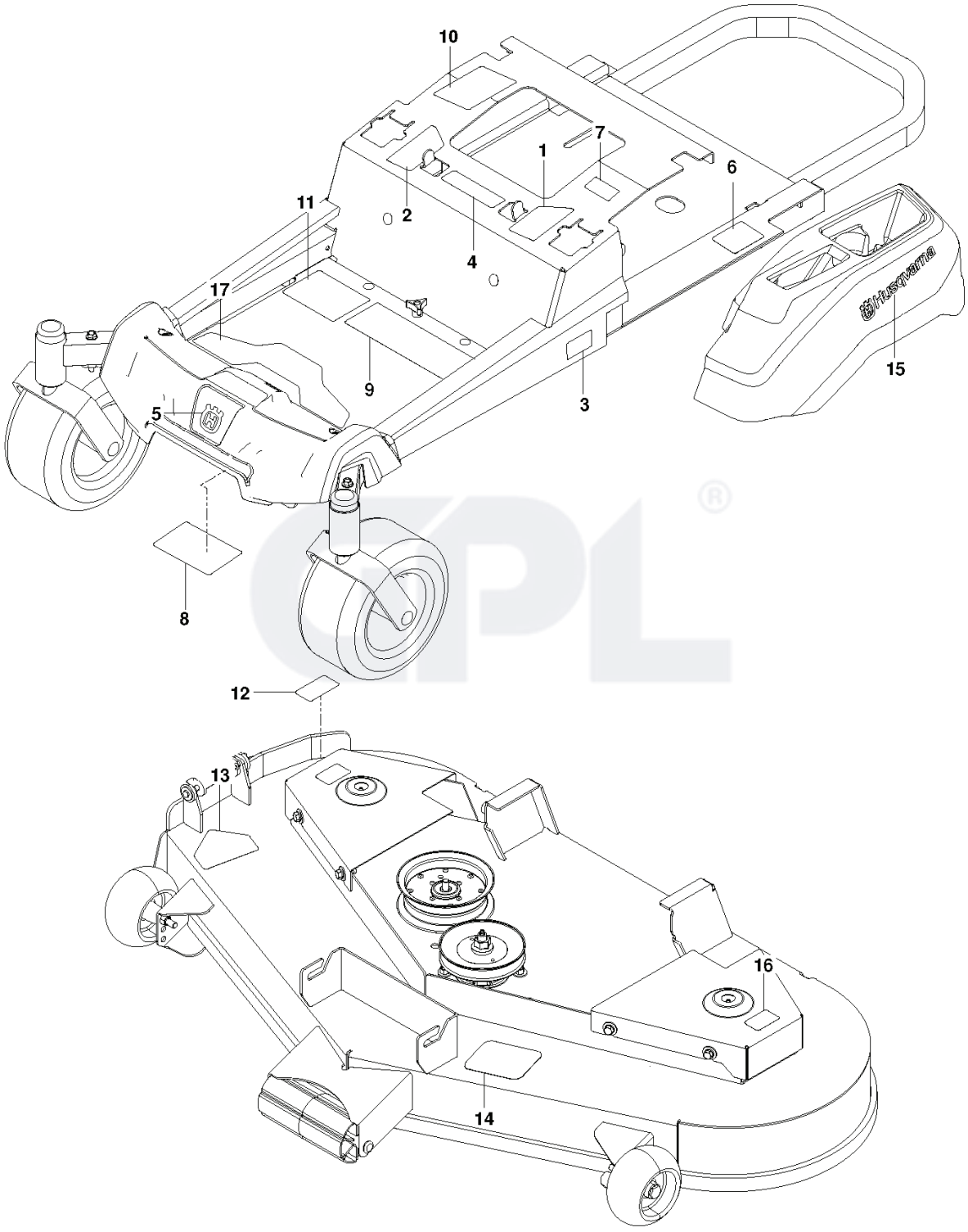
10
7
1
6
11
2
4
17
9
3
15
5
8
12
13
16
14

REF.	PART NO.	DESCRIPTION	REMARK	QTY.	KIT
1	587595601	DECAL		1	
2	587595501	DECAL		1	
3	587220301	DECAL		2	
4	539105745	DECAL		1	
5	532428677	DECAL		1	
6	539108385	DECAL		1	
7	539108386	DECAL		1	
8	539109897	DECAL		1	
9	583934001	DECAL		1	
10	539110522	DECAL		1	
11	588035101	DECAL		1	
12	581724401	DECAL		1	
13	584904601	DECAL		1	
14	539112620	DECAL		1	
15	577469001	DECAL		2	
16	581724301	DECAL		2	
17	587000701	PAD		1	

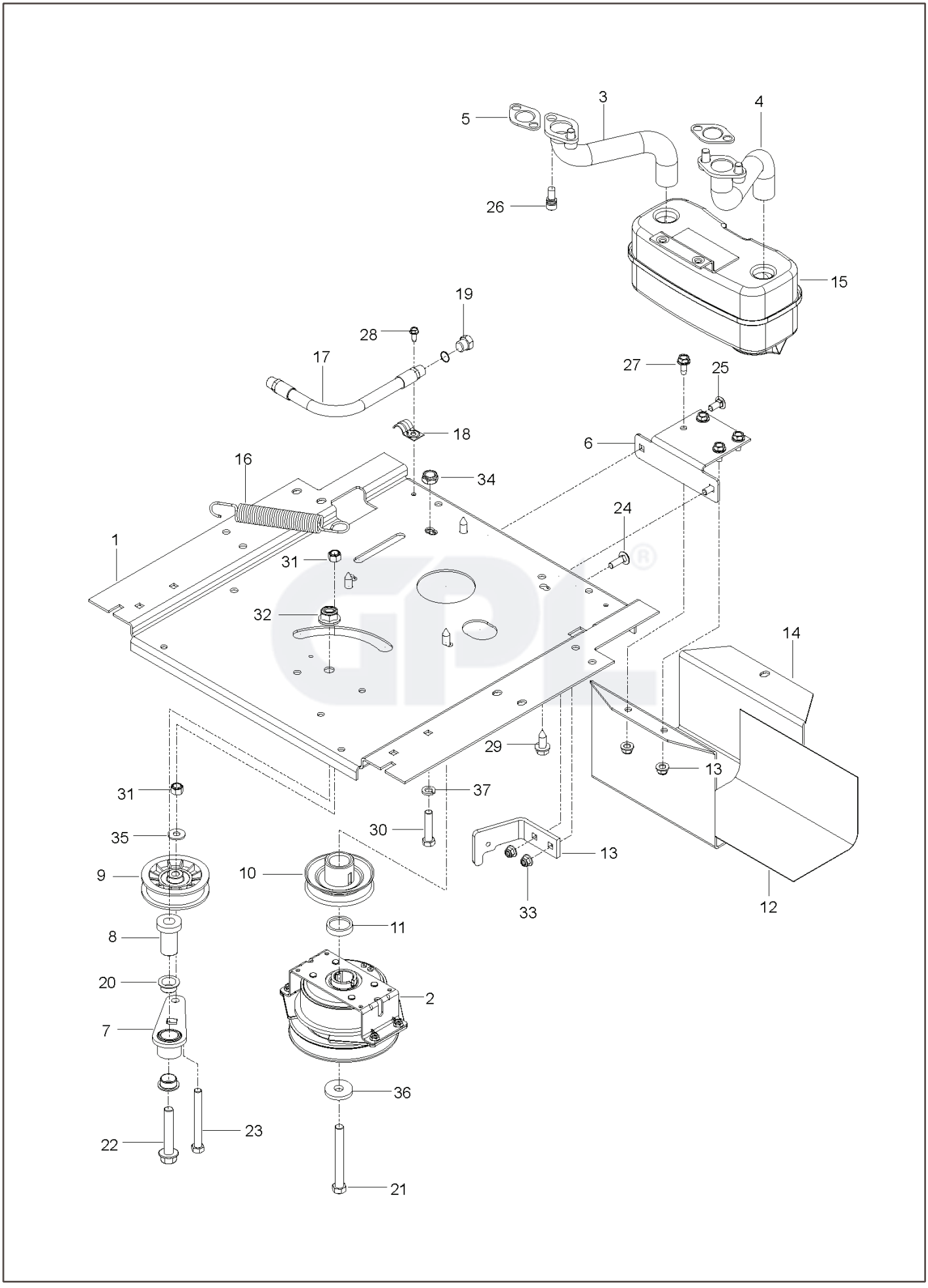
1
2
3
4
5
6
7
8
9
10
11
12
13
14
15
16
17
18
19
20
21
22
23
24
25
26
27
28
29
30
31
32
33
34
35
36
37

REF.	PART NO.	DESCRIPTION	REMARK	QTY.	KIT
1	588017102	PLATE		1	
2	587241601	CLUTCH		1	
3	532191549	EXHAUST TUBE RH		1	
4	532191548	EXHAUST TUBE LH		1	
5	532192442	GASKET.MUFFLER.#806237		2	
6	581886702	BRACKET		1	
7	532448145	ARM		1	
8	582538901	SPINDLE		1	
9	539110311	PULLEY		1	
10	587537401	PULLEY		1	
11	587660101	SPACER		1	
12	539132859	HEAT SHIELD		1	
13	587633302	STOP		1	
14	587451202	GUARD		1	
15	539131604	MUFFLER ASSY		1	
16	532196105	SPRING		1	
17	584825502	HOSE ASSY		1	
18	539101363	CLAMP		1	
19	585807101	PLUG		1	
20	501603701	BEARING		2	
21	581332803	BOLT		1	
22	582539501	BOLT		1	
23	874520656	BOLT		1	
24	539990208	SCREW		2	
25	539990316	BOLT		1	
26	532192443	SCREW		4	
27	817490512	SCREW		4	
28	817490410	SCREW		1	
29	817120616	SCREW		4	
30	539976949	BOLT		1	
31	539976979	NUT		2	
32	521991101	NUT		1	
33	539112899	NUT, 5/16–18, NYLOC		6	
34	539200282	NUT		1	
35	539990692	WASHER		1	
36	532126197	WASHER		1	
37	810030600	WASHER		1	
	589543901	INSTRUCTION	NOT SHOWN	1	7, 8, 9, 20, 22, 23, 31, 35
	000000000	W/O DESCRIPTION	Engine, Briggs & Stratton Vanguard™ 17.1 kW (23 hp). For engine replacement parts, see a B&S Dealer.	1	

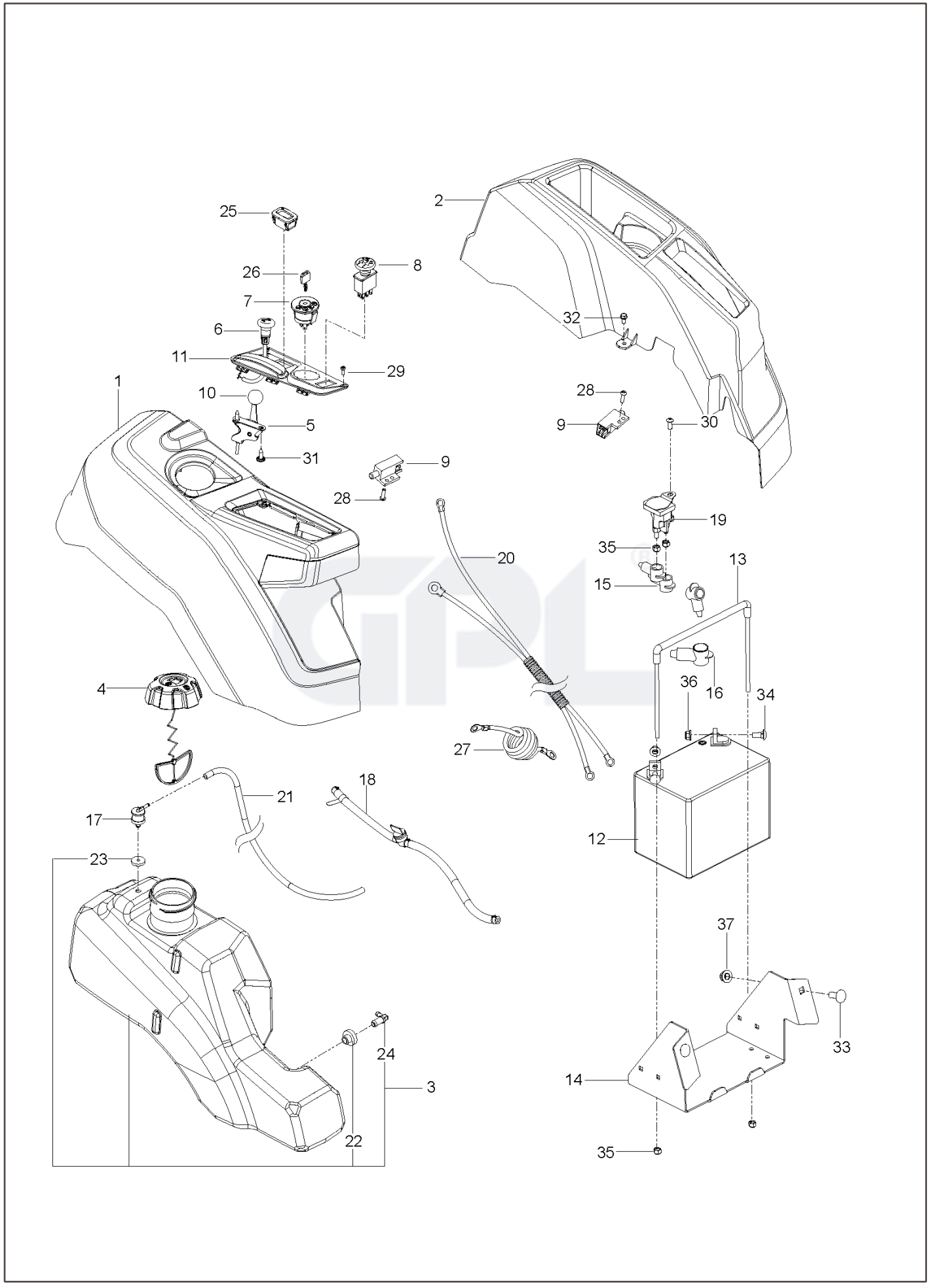
1
2
3
4
5
6
7
8
9
10
11
12
13
14
15
16
17
18
19
20
21
22
23
24
25
26
27
28
29
30
31
32
33
34
35
36
37

REF.	PART NO.	DESCRIPTION	REMARK	QTY.	KIT
1	585522801	CONSOLE ASSY		1	
2	586621201	CONSOLE ASSY		1	
3	578180602	FUEL TANK ASSY	Fits 2.75" filler neck	1	
4	585124801	FUEL CAP ASSY	Fits 2.75" filler neck	1	
4	529989702	CAP	Fits 2.00" filler neck	1	
5	539112438	THROTTLE CABLE		1	
6	586881501	CHOKE CONTROL ASSY		1	
7	539107541	IGNITION SWITCH		1	
8	532174651	SWITCH		1	
9	587601501	SWITCH		2	
10	539133049	KNOB ROUND BALL		1	
11	585522701	CONTROL PANEL		1	
12	579411601	BATTERY		1	
13	539131209	BATTERY TIE DOWN ASSEMBLY		1	
14	585048702	BOX		1	
15	532154336	COVER		3	
16	539102759	INSULATOR		1	
17	576618101	TANK VENT		1	
18	586123902	FUEL HOSE		1	
19	532192507	SOLENOID		1	
20	587198601	HARNESS		1	
21	587044564	HOSE	CUT TO LENGTH	1	
22	532003645	BUSHING		1	
23	532437492	GROMMET		1	
24	532139277	NIPPLE		1	
25	586161801	HOUR METER		1	
26	532140401	KEY		1	
27	539103306	CABLE		1	
28	574822701	SCREW		2	
30	539111229	SCR 1/4–20 X 5/8 BTN SKT HD ZD		1	
29	530016064	SCREW		2	
31	532141841	SCREW		2	
32	539990071	HCS ¼20 X ½ GR 5 ZD		2	
33	539990645	BOLT		2	
34	872140506	BOLT		2	
35	873680400	NUT		5	
36	539112899	NUT, 5/16–18, NYLOC		2	
37	521996501	NUT		2	
	586337301	HARNESS		1	
	532109748	RELAY		1	

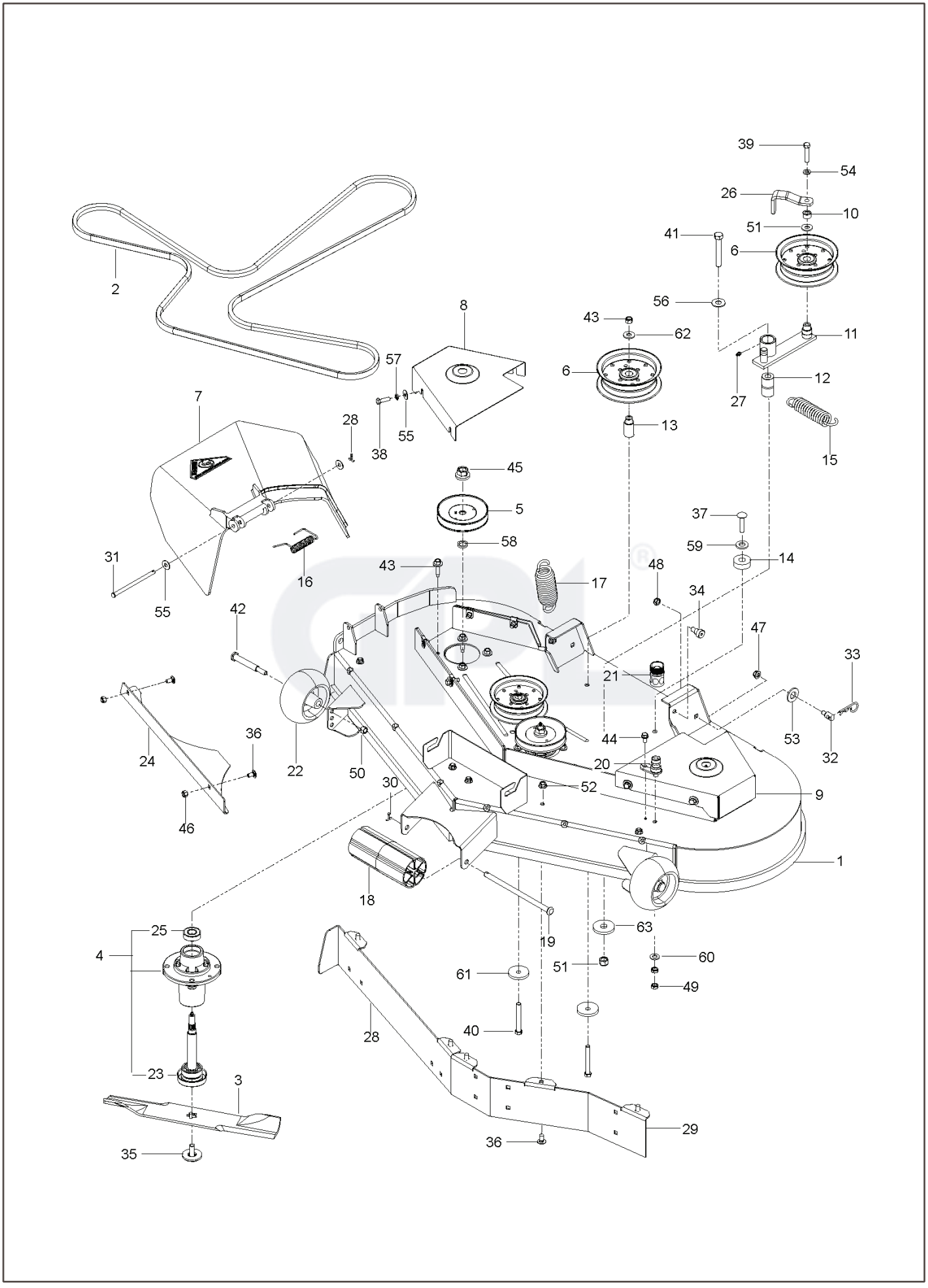
39
54
26
10
51
41
6
56
43
62
11
6
12
27
13
15
8
57
28
38
55
7
45
5
58
37
59
14
31
55
16
43
17
48
34
42
47
33
21
24
36
46
22
50
30
44
53
32
20
52
9
18
1
25
4
23
3
35
19
63
60
61
51
49
40
28
29
36

REF.	PART NO.	DESCRIPTION	REMARK	QTY.	KIT
1	595965601	SERVICE KIT	W/ DECALS	1	
2	539109243	BELT		1	
3	539113425	RIDE ON BLADE		3	
4	539131898	SPINDLE	CAST IRON	3	
5	532173436	PULLEY		3	
6	539132728	PULLEY		3	
7	539110732	DEFLECTOR		1	
8	539113411	SHIELD		1	
9	539113413	SHIELD		1	
10	539923515	SPACER		1	
11	539112198	ARM		1	
12	539103427	BUSHING		1	
13	539112169	BUSHING		2	
14	539116378	BUSHING		1	
15	539103256	SPRING		1	
16	539110735	SPRING		1	
17	539118762	SPRING		2	
18	532176066	ROLLER		1	
19	532179127	ROD ROLLER NOSE		1	
20	532415598	HOSE COUPLING		1	
21	532416405	COUPLING		1	
22	532133957	WHEEL		2	
23	532187291	SHAFT		3	
24	539113427	PLATE		1	
25	532110485	BEARING		3	
26	539114981	GUIDE		1	
27	539976998	NIPPLE		1	
28	583833601	SUPPORT KIT		1	
29	583833601	SUPPORT KIT		1	
30	876020412	SPLIT PIN		2	
31	539110736	CLEVIS PIN		1	
32	532195161	STUD		2	
33	539976989	SPLIT PIN		2	
34	539113621	SB 3/8–16 X 3/8 SKT HD ZD		2	
35	532193003	SCREW		3	
36	872110505	BOLT		2	
37	539990923	RHSNB 3/8–16X1–3/4 GR 5 ZD		1	
38	874780516	BOLT		8	
39	874780628	BOLT		1	
40	874780648	BOLT		2	
41	874780852	BOLT		1	
42	532193406	BOLT		2	
43	584953901	BOLT		12	
44	817490408	SCREW		1	
45	532400234	NUT		3	
46	873800500	LOCK NUT		2	
47	539112899	NUT, 5/16–18, NYLOC		2	
48	539200282	NUT		2	
49	873350600	NUT		2	
50	539976979	NUT		4	
51	873800800	NUT		1	
52	539990585	NUT		5	
53	819212113	WASHER		2	
54	810030600	WASHER		1	
55	819121414	WASHER		10	
56	539990550	WASHER		1	
57	810030500	WASHER		8	
58	532187690	WASHER		3	
59	819171713	WASHER		1	
60	819131316	WASHER		1	
61	539106504	WASHER		2	
62	819141614	WASHER		3	
63	539112670	WASHER		1	
	539112170	HOUSING ASSY	ALUMINUM	3	

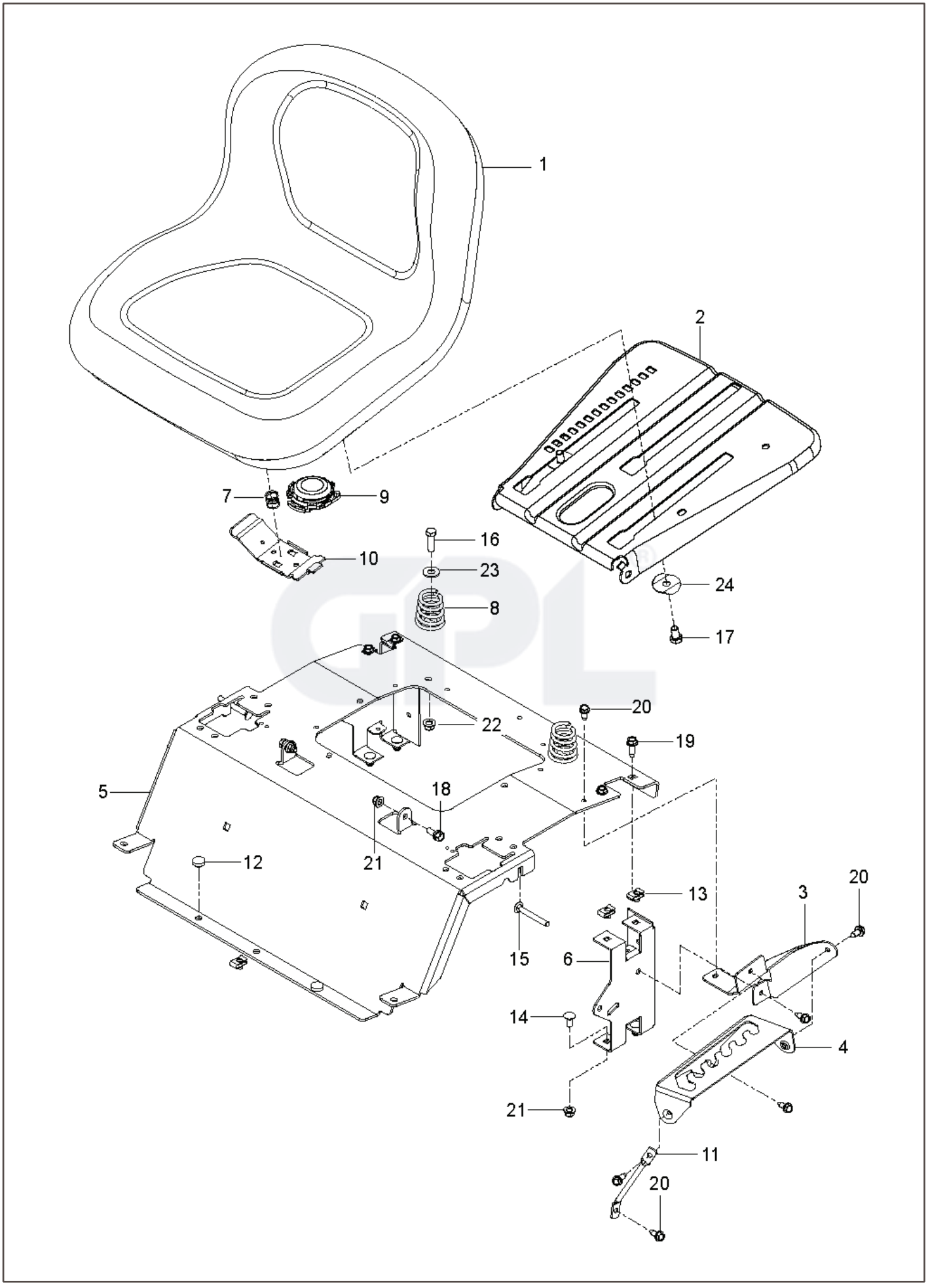
1
2
7
9
10
16
23
8
24
17
20
22
19
5
18
21
12
13
3
20
15
6
14
4
21
11
20

REF.	PART NO.	DESCRIPTION	REMARK	QTY.	KIT
1	532439822	SEAT		1	9
2	587232002	PLATE		1	
3	586220802	SUPPORT PLATE		1	
4	586221202	PLATE		1	
5	589761206	PLATE		1	
6	580308202	SUPPORT		2	
7	532198200	SPRING		1	
8	589483501	SPRING		2	
9	581429302	SWITCH		1	
10	532197661	HANDLE		1	
11	586428601	SUPPORT LEG		1	
12	585989301	BUMPER		2	
13	539104763	CLIP		5	
14	872140506	BOLT		4	
15	510422701	SCREW		2	
16	874780620	BOLT		2	
17	874760612	BOLT		1	
18	539110303	BOLT		2	
19	817490512	SCREW		4	
20	817000510	BOLT		6	
21	539112899	NUT, 5/16–18, NYLOC		4	
22	521996501	NUT		2	
23	819141614	WASHER		2	
24	501051801	WASHER		2	
	532421499	ARM REST		1	