Z 248F, 967844801-02, 2020-07

SPARE PARTS LIST

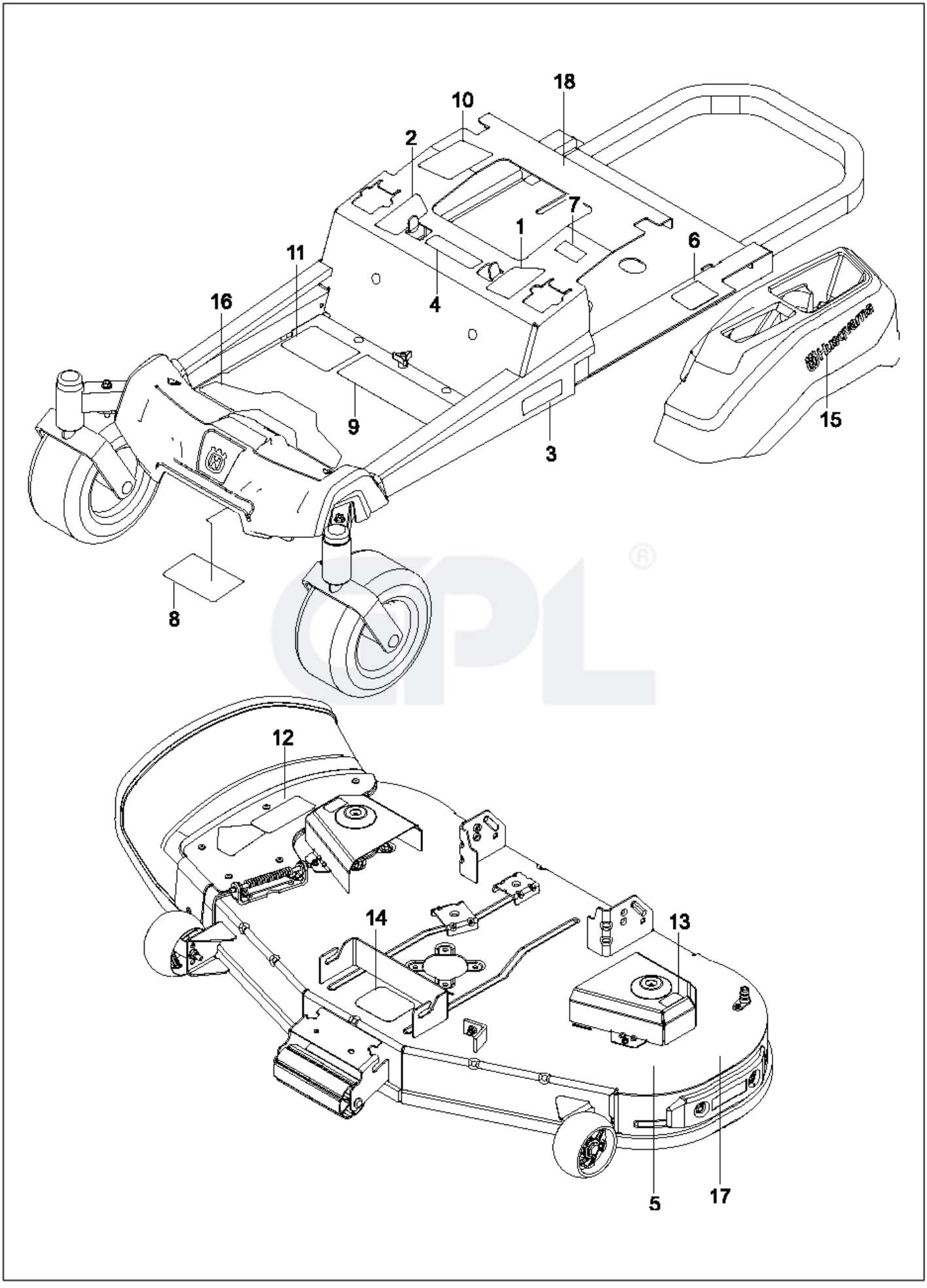
18
10
2
7
1
6
11
4
16
9
3
15
8
12
14
13
5
17

REF.	PART NO.	DESCRIPTION	REMARK	QTY.	KIT
1	587595601	DECAL		1	
2	587595501	DECAL		1	
3	587220301	DECAL		1	
4	539105745	DECAL		1	
5	592898301	DECAL		1	
6	539108385	DECAL		1	
7	539108386	DECAL		1	
8	539109897	DECAL		1	
9	590485501	DECAL		1	
10	532423829	DECAL		1	
11	588035101	DECAL		1	
12	586978801	DECAL		1	
13	589357901	DECAL		1	
14	539112620	DECAL		1	
15	577469001	DECAL		2	
16	587000701	PAD		1	
17	590885001	DECAL		1	
18	591357301	DECAL		1	

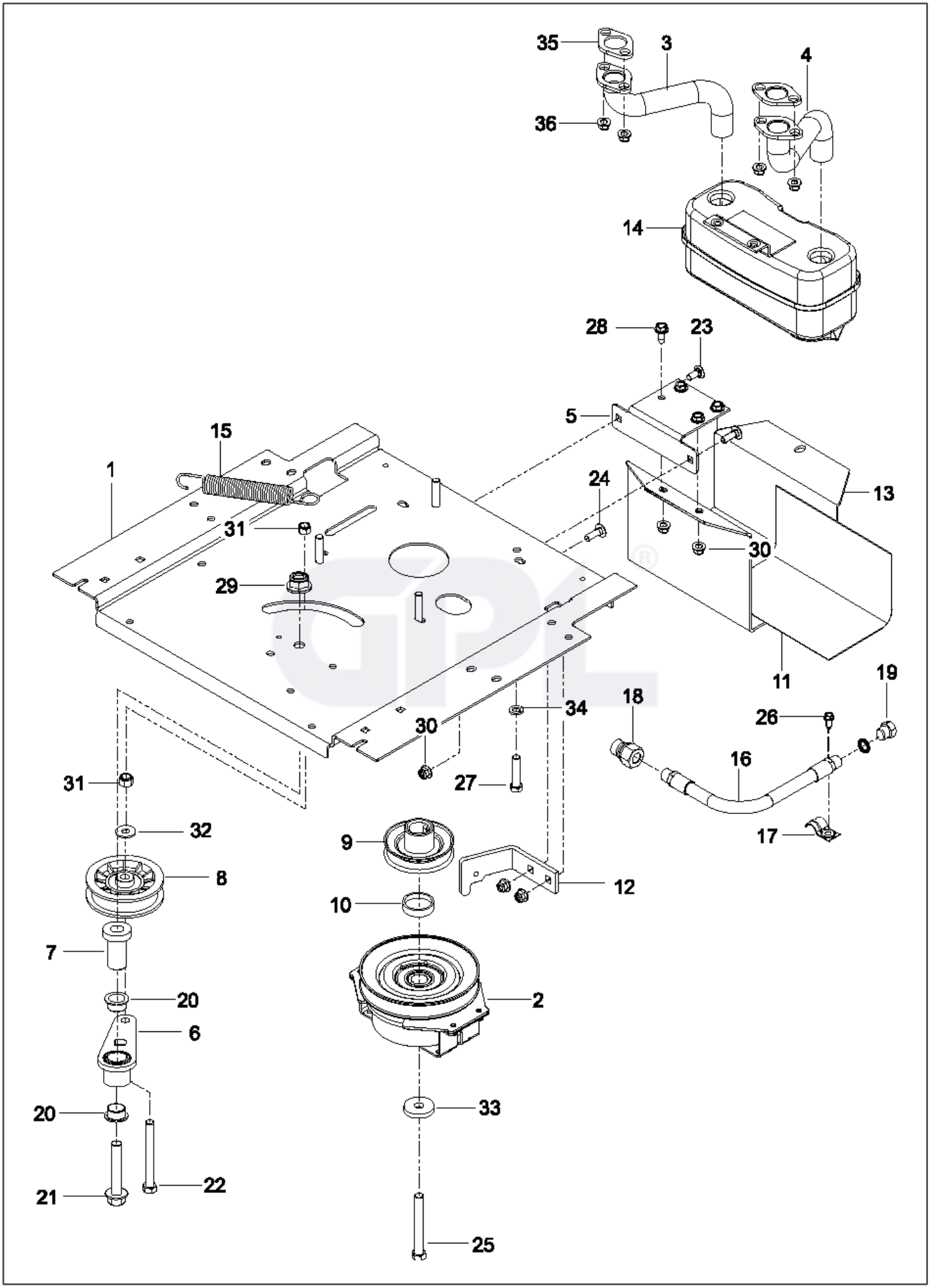
35
3
4
36
14
28
23
5
15
1
24
13
31
30
29
11
19
18
34
30
26
16
31
27
17
32
9
8
12
10
7
2
20
6
20
33
21
22
25

REF.	PART NO.	DESCRIPTION	REMARK	QTY.	KIT
1	593898602	PLATE		1	
2	587241601	CLUTCH		1	
3	583955701	TUBE		1	
4	583955601	TUBE		1	
5	581886702	BRACKET		1	
6	532448145	ARM		1	
7	582538901	SPINDLE		1	
8	539110311	PULLEY		1	
9	587537401	PULLEY		1	
10	587660101	SPACER		1	
11	539132859	HEAT SHIELD		1	
12	587633302	STOP		1	
13	587451202	GUARD		1	
14	539131604	MUFFLER ASSY		1	
15	532196105	SPRING		1	
16	584825501	HOSE ASSY		1	
17	539101363	CLAMP		1	
18	522599001	ADAPTER		1	
19	585807101	PLUG		1	
20	501603701	BEARING		2	
21	582539501	BOLT		1	
22	874520656	BOLT		1	
23	539990316	BOLT		2	
24	539990208	SCREW		2	
25	581332803	BOLT		1	
26	817490410	SCREW		1	
27	874780620	BOLT		4	
28	817490512	SCREW		4	
29	521991101	NUT		1	
30	539112899	NUT, 5/16–18, NYLOC		5	
31	539976979	NUT		2	
32	819121414	WASHER		1	
33	532126197	WASHER		1	
34	539990118	WASHER		4	
35	532178151	MUFFLER GASKET		1	
36	532184362	NUT		1	
	522598601	PIGTAIL		1	
	589543901	INSTRUCTION	Incl. 6,7,8,20,21,22,31,32	1	

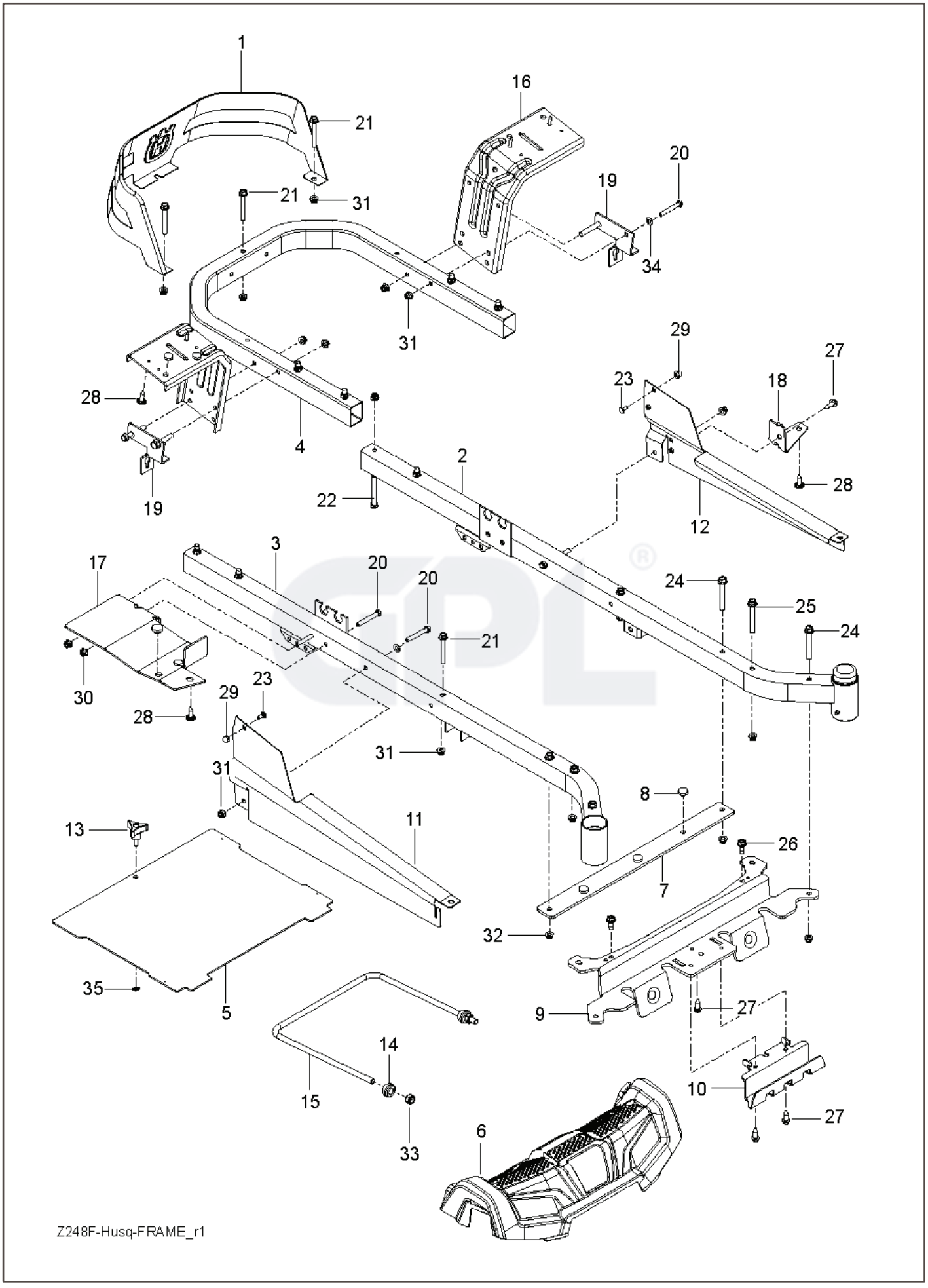
1
16
21
21
31
20
19
34
31
29
27
23
18
28
4
2
22
12
28
19
3
17
20
20
24
25
24
21
30
28
29
23
31
31
8
13
11
26
7
32
35
5
9
27
14
10
15
27
33
6
Z248F-Husq-FRAME_r1

REF.	PART NO.	DESCRIPTION	REMARK	QTY.	KIT
1	585039802	GUARD		1	
2	589283302	FRAME TUBE		1	
3	589283402	FRAME TUBE		1	
4	584991002	TUBE		1	
5	598712401	PLATE KIT	W/ SFTY DECALS	1	
6	586703801	FRONT COVER	W/ DECALS	1	
7	585523004	SUPPORT		1	
8	585989301	BUMPER		7	
9	585523104	CROSS MEMBER		1	
10	585523204	SKID PLATE		1	
11	585331602	COVER		1	
12	585331502	COVER		1	
13	539104411	KNOB		1	
14	532195263	BUSHING		2	
15	521938101	LINK		1	
16	580501302	BRACKET		2	
17	585523404	SUPPORT		1	
18	585523604	SUPPORT		1	
19	585474302	BRACKET		2	
20	874780536	BOLT		8	
21	874780544	BOLT		5	
22	874780648	BOLT		8	
23	585940001	BOLT		2	
24	577117701	SCREW		4	
25	586654301	BOLT		2	
26	586881101	BOLT		2	
27	817000510	BOLT		4	
28	532416358	SCREW		6	
29	585938101	NUT		2	
30	873900500	NUT		2	
31	539112899	NUT, 5/16-18, NYLOC		9	
32	521996501	NUT		8	
33	539119124	NUT		2	
34	819111116	WASHER		6	
35	532423063	WASHER		1	

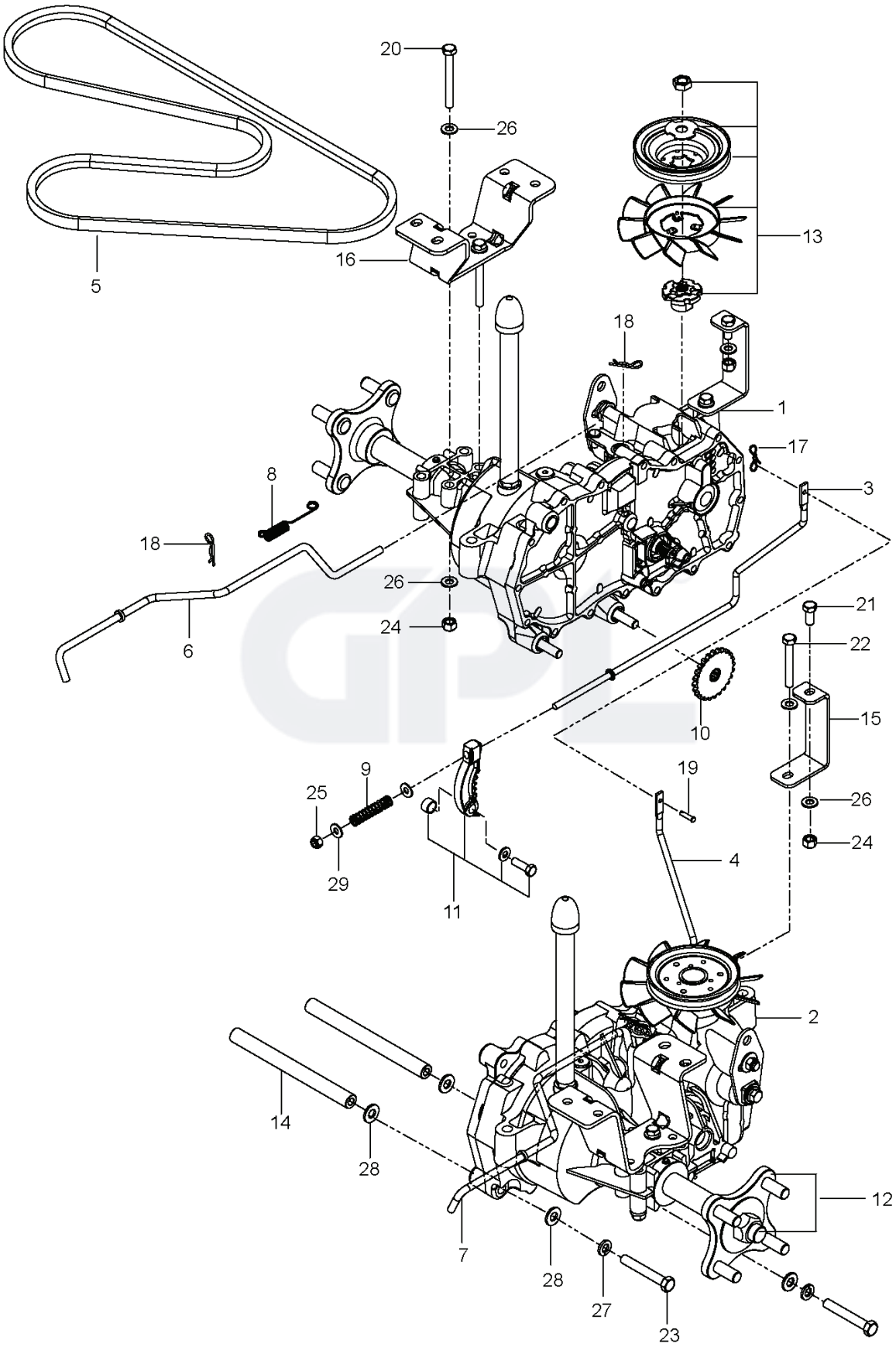
20
26
13
16
5
18
1
17
8
3
18
26
24
6
21
22
10
15
9
19
25
26
24
29
4
11
2
14
28
12
7
28
27
23

REF.	PART NO.	DESCRIPTION	REMARK	QTY.	KIT
1	510375601	TRANSMISSION		1	
2	510375602	TRANSMISSION		1	
3	574030501	LINKAGE		1	
4	574030502	LINKAGE		1	
5	539110411	BELT		1	
6	585474401	ROD		1	
7	585474501	ROD		1	
8	586665101	SPRING		2	
9	539110342	SPRING		2	
10	539120080	DISC		2	
11	539120079	ARM		2	
12	575507001	KIT		1	
13	501403602	TRANSMISSION KIT		2	
14	510184104	SPACING TUBE		2	
15	580806502	SUPPORT		2	
16	580806602	BRACKET		2	
17	587225301	PIN		1	
18	539976988	PIN		4	
19	587115301	PEN		1	
20	874780544	BOLT		4	
21	539976934	SCREW		2	
22	874780536	BOLT		2	
23	539990637	SCREW		4	
24	873800500	LOCK NUT		8	
25	539976978	NUT		2	
26	819111116	WASHER		16	
27	539990118	WASHER		4	
28	819131316	WASHER		8	
29	819091016	WASHER		4	

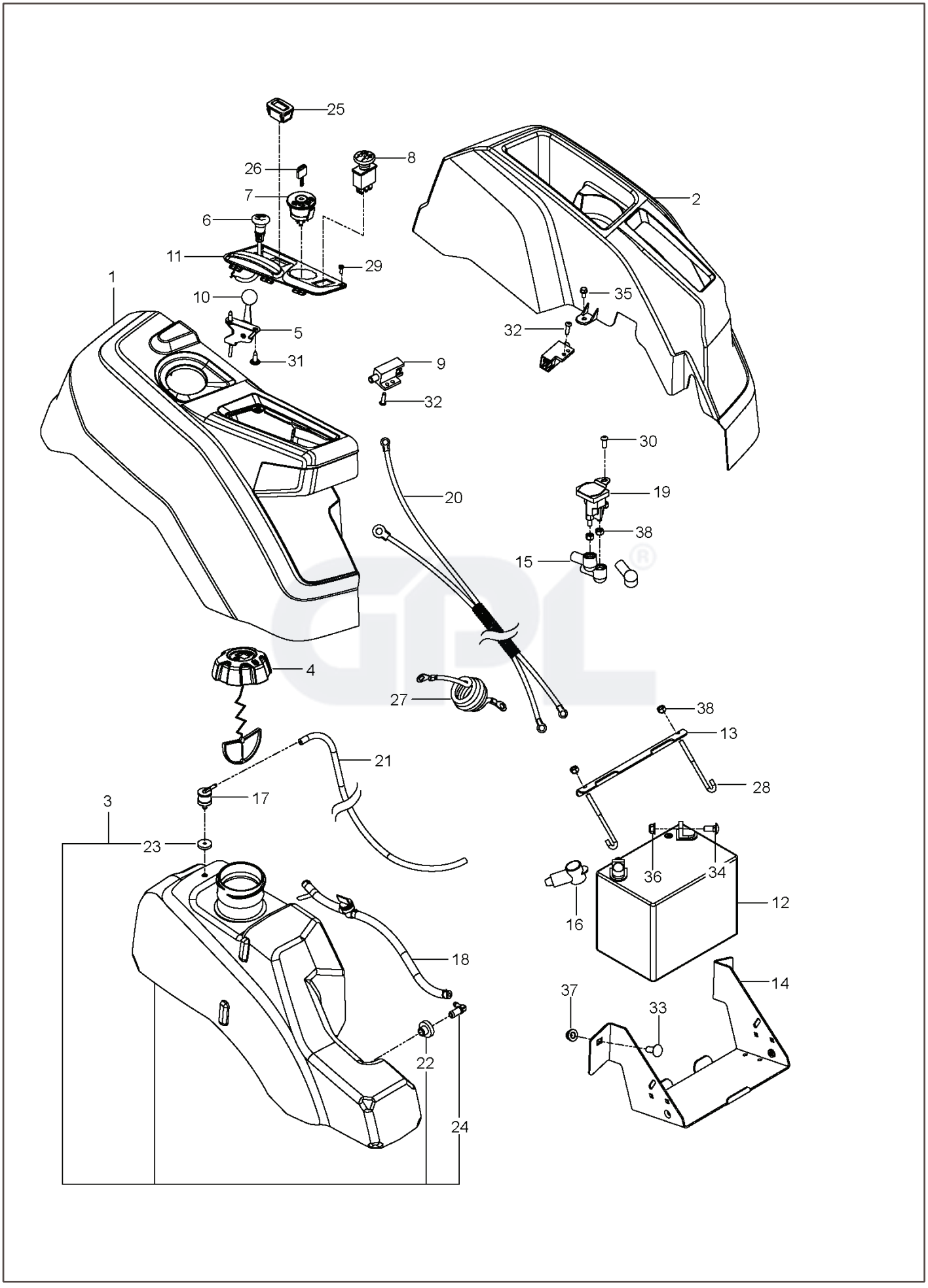
25
26
8
7
6
11
29
1
10
5
31
2
35
32
9
32
30
19
38
15
20
4
27
38
13
28
21
17
3
23
18
22
24
36
34
12
16
14
37
33

REF.	PART NO.	DESCRIPTION	REMARK	QTY.	KIT
1	585522801	CONSOLE ASSY		1	
2	586621201	CONSOLE ASSY		1	
3	589924702	FUEL TANK ASSY	Fits 2.75" filler neck	1	
4	585124801	FUEL CAP ASSY	Fits 2.75" filler neck	1	
4	529989702	CAP	Fits 2.00" filler neck	1	
5	539112438	THROTTLE CABLE		1	
6	586881501	CHOKE CONTROL ASSY		1	
7	539107541	IGNITION SWITCH		1	
8	582107602	SWITCH		1	
9	587601501	SWITCH		2	
10	539133049	KNOB ROUND BALL		1	
11	585522701	CONTROL PANEL		1	
12	539102463	BATTERY		1	
13	510030003	BRACKET		1	
14	582609602	BOX		1	
15	532131563	COVER		3	
16	539102759	INSULATOR		1	
17	576618101	TANK VENT		1	
18	586123906	FUEL HOSE		1	
19	582042801	SOLENOID		1	
20	587198601	HARNESS		1	
21	587044550	HOSE		1	
22	532003645	BUSHING		1	
23	532437492	GROMMET		1	
24	532139277	NIPPLE		1	
25	586161801	HOUR METER		1	
26	532140401	KEY		1	
27	586108201	HARNESS		1	
28	588839401	HOOK		2	
29	545227101	SCREW		2	
30	539111229	SCR 1/4–20 X 5/8 BTN SKT HD ZD		1	
31	532141841	SCREW		2	
32	586936001	SCREW		2	
33	539990645	BOLT		2	
34	539990316	BOLT		2	
35	817490408	SCREW		2	
36	539112899	NUT, 5/16–18, NYLOC		2	
37	521996501	NUT		2	
38	539976978	NUT		5	
	586337301	HARNESS	NOT SHOWN	1	
	532109748	RELAY	NOT SHOWN	1	

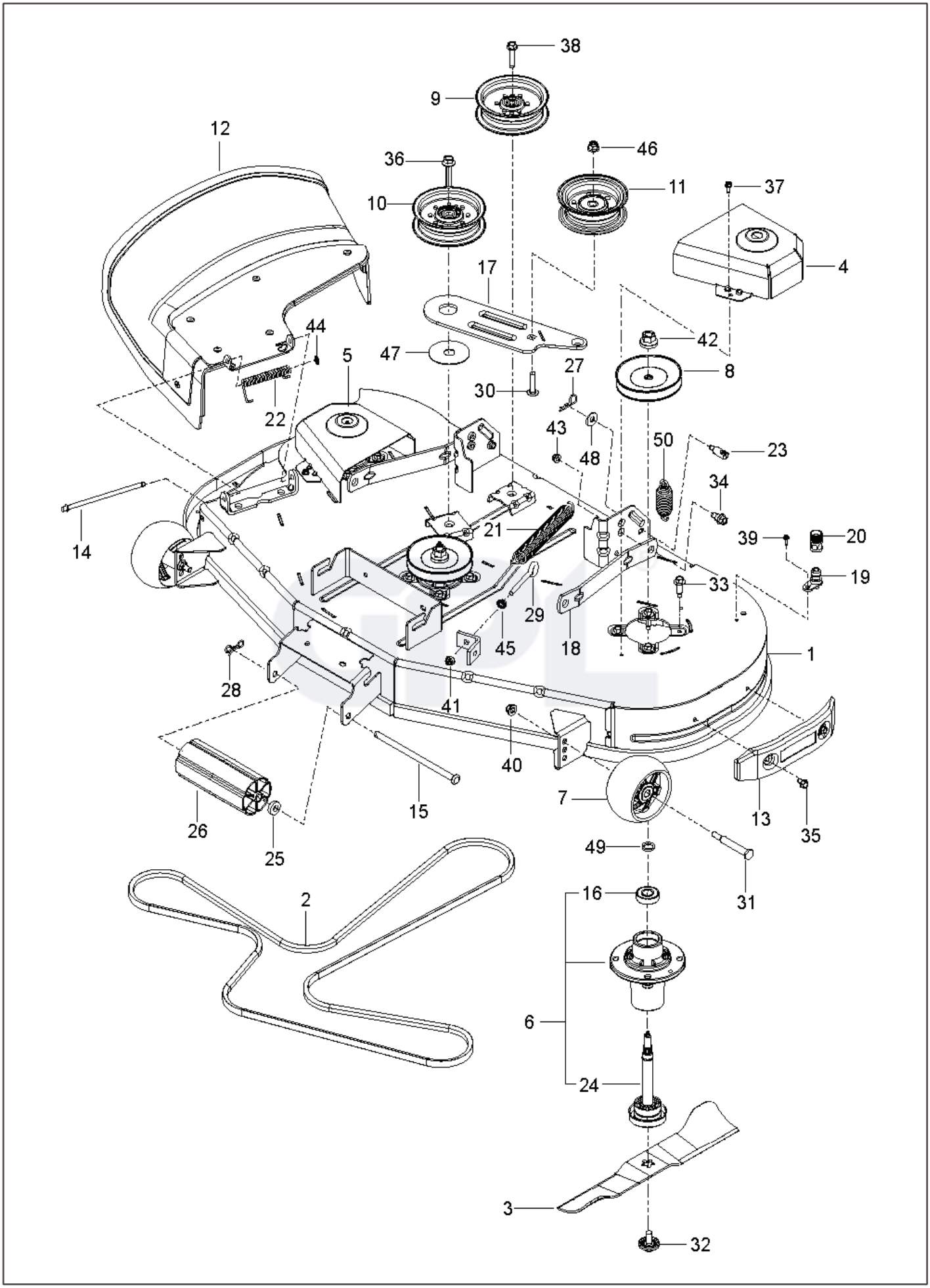
38
9
12
36
46
10
11
37
4
17
44
42
5
47
27
8
30
22
43
50
23
48
34
14
21
39
20
19
33
29
45
18
1
28
41
40
7
13
35
15
26
25
49
31
2
16
6
24
3
32

REF.	PART NO.	DESCRIPTION	REMARK	QTY.	KIT
1	583810101	SERVICE KIT		1	
2	582558001	BELT		1	
3	588811002	BLADE		2	
4	588812802	COVER		1	
5	588812402	COVER		1	
6	539131898	SPINDLE		3	
7	589527301	WHEEL		2	
8	532173435	PULLEY		3	
9	532196106	PULLEY		1	
10	532196104	PULLEY		1	
11	532193197	PULLEY		1	
12	588980701	DEFLECTOR ASSY		1	
13	582541103	BUMPER		1	
14	532131491	SHAFT		2	
15	532179127	ROD ROLLER NOSE		1	
16	532110485	BEARING		2	
17	588812202	ARM		1	
18	587140502	ARM		2	
19	532415598	HOSE COUPLING		1	
20	532416405	COUPLING		1	
21	582504001	SPRING		1	
22	587354701	SPRING		1	
23	532195161	STUD		2	
24	532187291	SHAFT		3	
25	582360501	BUSHING		1	
26	532176066	ROLLER		1	
27	532194209	SPRING		2	
28	532194208	PIN		1	
29	539115574	EYE BOLT		1	
30	872110614	BOLT		1	
31	532193406	BOLT		2	
32	532193003	SCREW		2	
33	584953901	BOLT		12	
34	532196539	BOLT		2	
35	532170165	BOLT		2	
36	588438301	SCREW		1	
37	532137729	SCREW		4	
38	817490628	SCREW		1	
39	817490410	SCREW		1	
40	521996501	NUT		2	
41	539112899	NUT, 5/16–18, NYLOC		1	
42	532400234	NUT		3	
43	873900500	NUT		2	
44	532110452	NUT		1	
45	539990585	NUT		1	
46	873680600	NUT		1	
47	532178515	WASHER		1	
48	819212113	WASHER		2	
49	532187690	WASHER		3	
50	539118762	SPRING		1	

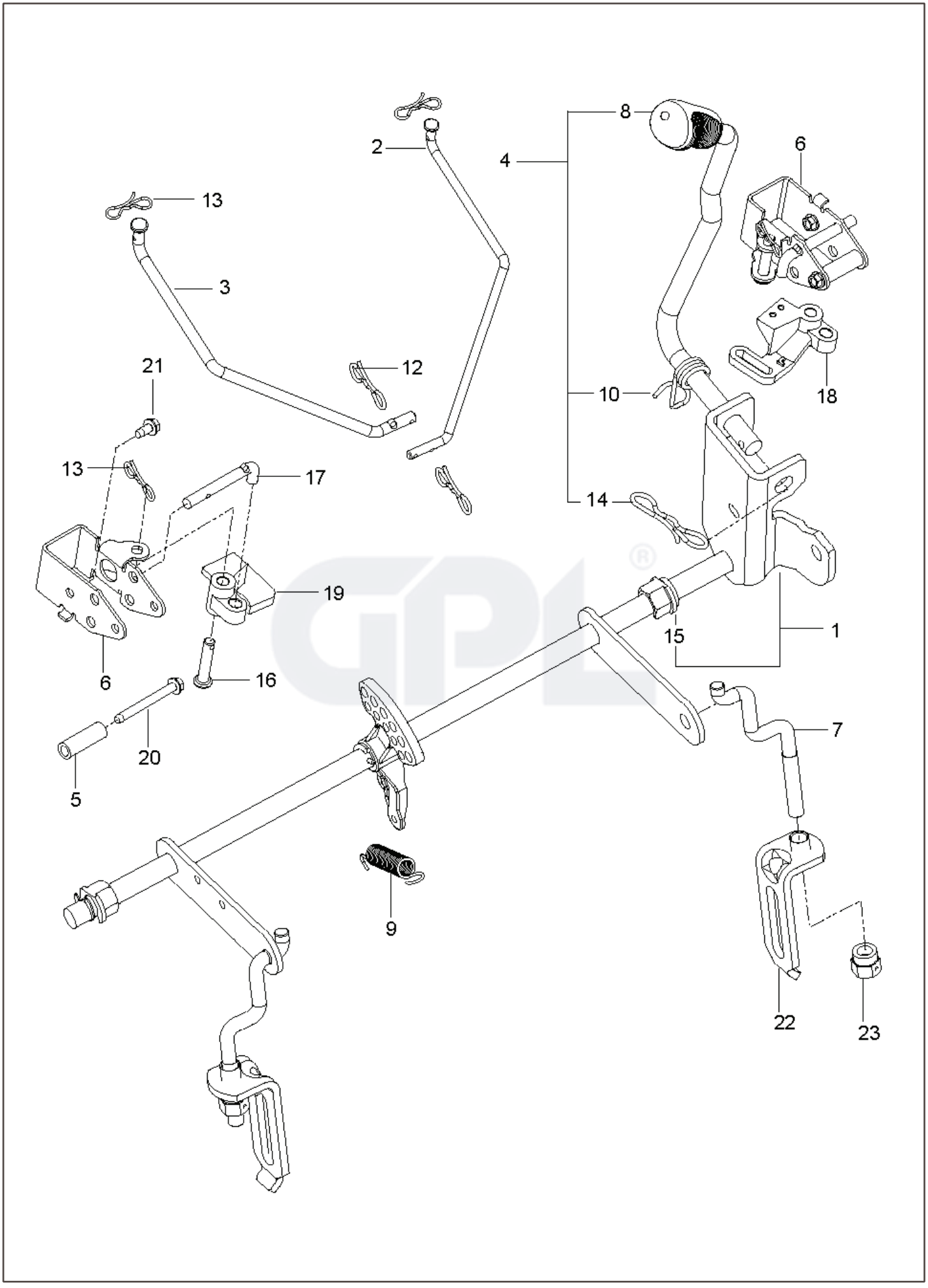

8
2
4
6
13
3
21
12
10
18
13
17
14
19
15
1
6
16
7
20
5
9
22
23

REF.	PART NO.	DESCRIPTION	REMARK	QTY.	KIT
1	586429702	SHAFT ASSY		1	
2	586457101	LINK		1	
3	586457201	LINK		2	
4	587622901	LIFTING LEVER ASSY		1	9, 11, 14
5	580486101	SPACER		2	
6	585682102	BRACKET		2	
7	525847201	LINK		2	
8	580962301	GRIP		1	
9	586867601	SPRING		1	
10	532196314	SPRING		1	
12	532194208	PIN		2	
13	587225301	PIN		4	
14	532194209	SPRING		4	
15	510184901	BUSHING		2	
16	585701401	PIN		2	
17	585682001	ROD		2	
18	586457401	BELLCRANK		1	
19	586457501	BELLCRANK		1	
20	586561301	SCREW		2	
21	532137729	SCREW		2	
22	532195174	BRACKET CONNECT LINK LIFT		1	
23	532195171	BUSHING		1	

*OPTIONAL

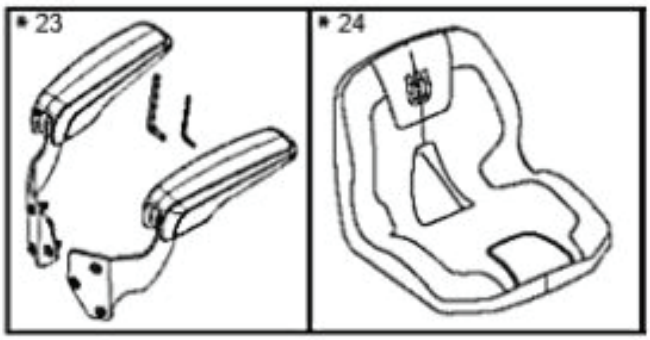
* 23
* 24

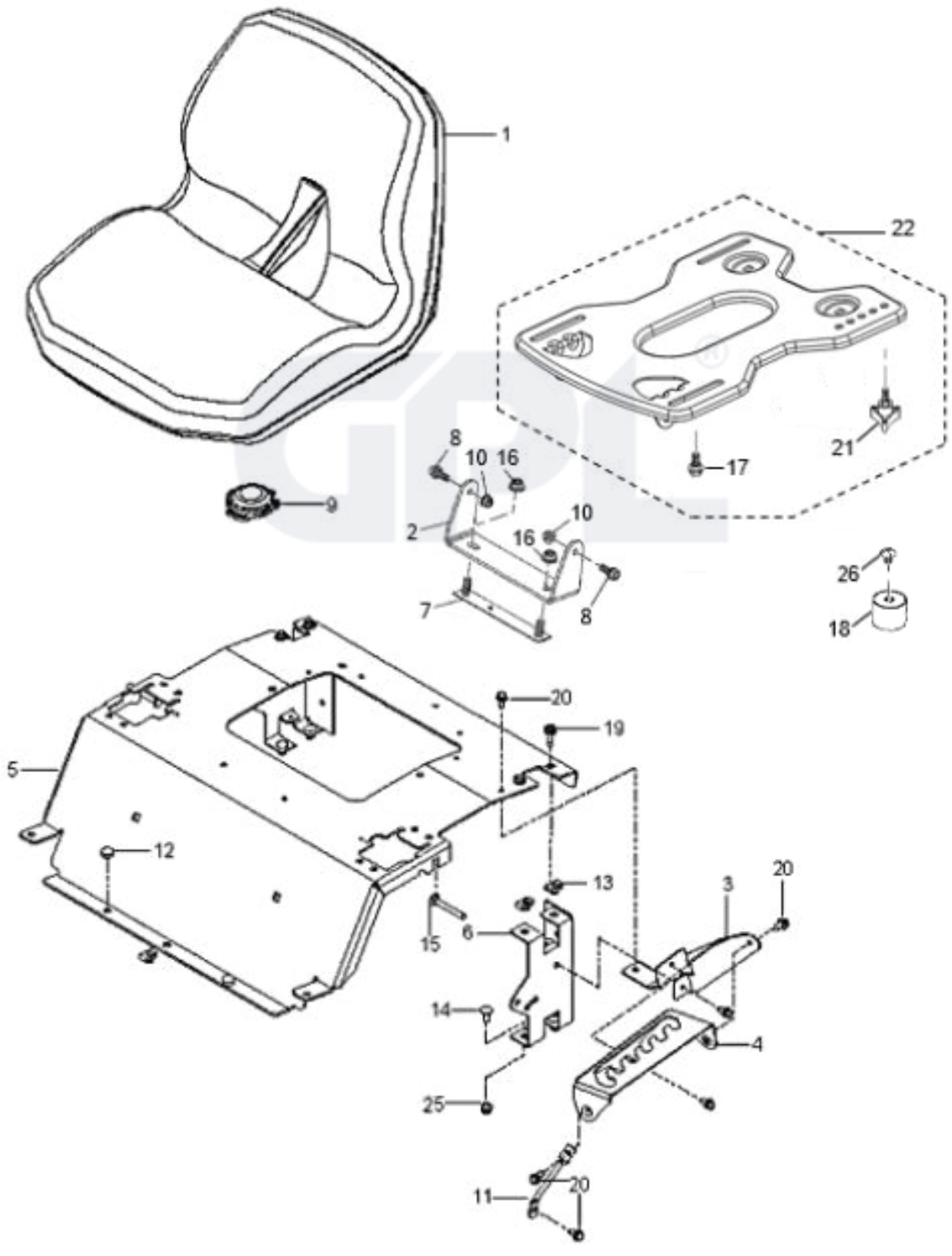
1
22
21
17
8
10
16
9
2
10
16
7
8
26
18
20
19
5
12
13
3
20
15
6
14
4
25
11
20

REF.	PART NO.	DESCRIPTION	REMARK	QTY.	KIT
1	597658101	SEAT		1	
2	597330002	BRACKET		1	
3	586220802	SUPPORT PLATE		1	
4	586221202	PLATE		1	
5	597160003	PLATE		1	
6	580308202	SUPPORT		1	
7	590777602	BRACKET		1	
8	596240701	BOLT		2	
9	532192749	SWITCH.SEAT.DP W/RAMPS		1	
10	594944401	NUT		2	
11	586428601	SUPPORT LEG		1	
12	585989301	BUMPER		2	
13	539104763	CLIP		5	
14	539990316	BOLT		4	
15	510422701	SCREW		2	
16	521996502	NUT		2	
17	597781801	BOLT		2	
18	597553401	BUMPER		2	
19	874490512	BOLT		4	
20	817000510	BOLT		6	
21	597783101	KNOB		2	
22	598001601	SERVICE KIT		1	
23	597658203	SERVICE KIT		1	
24	597959401	COVER		1	
25	539112899	NUT, 5/16–18, NYLOC		4	
26	597869301	BOLT		2	

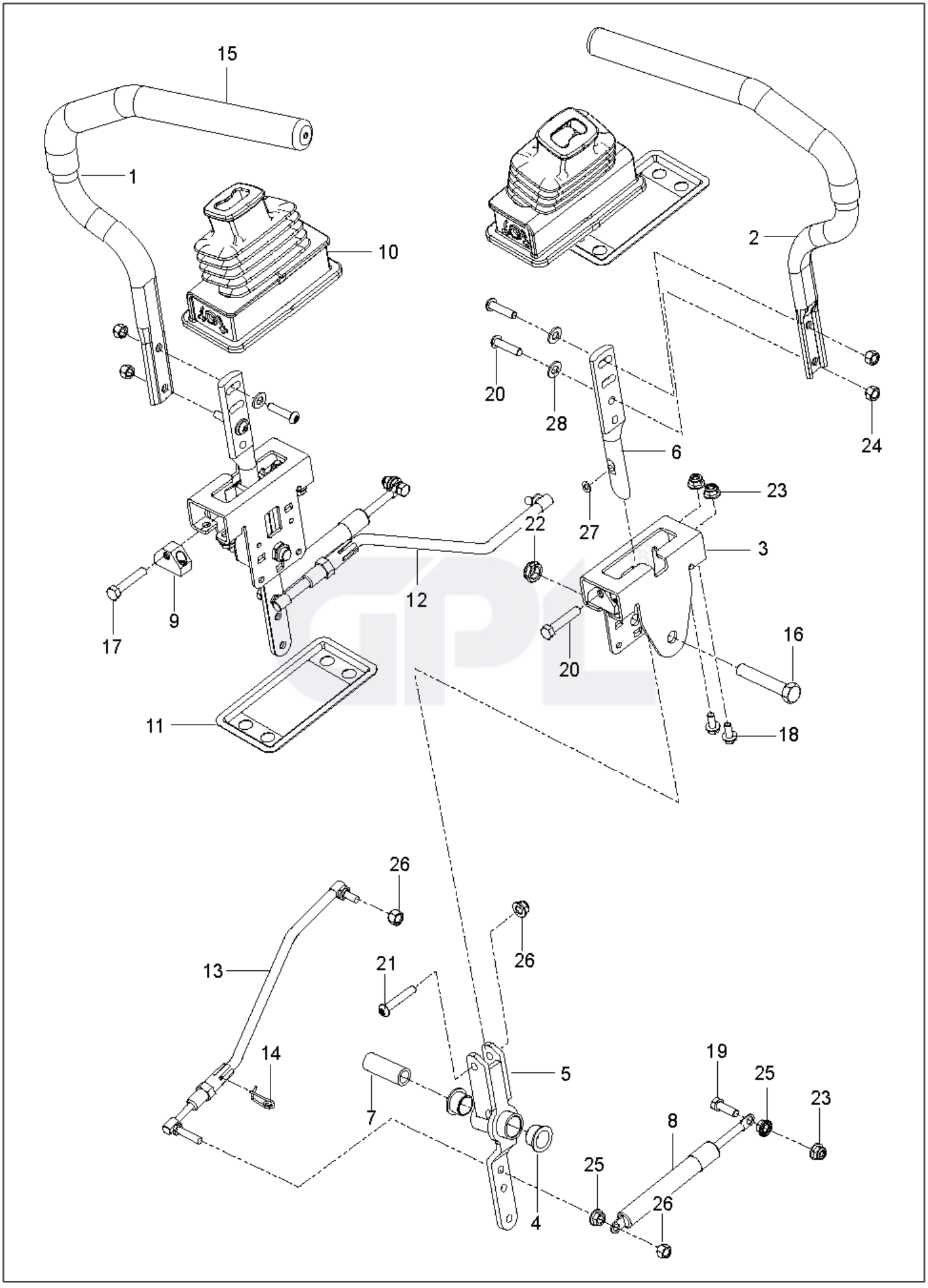
15
1
10
2
20
28
24
6
27
23
22
3
12
9
17
20
16
11
18
26
26
13
21
14
19
25
23
5
7
8
25
26
4

REF.	PART NO.	DESCRIPTION	REMARK	QTY.	KIT
1	590090803	TUBE	W/ GRIP	2	
2	590090804	TUBE	W/ GRIP	1	
3	585124705	BRACKET		2	
4	539131518	BEARING		4	
5	576140301	LEVER		2	
6	587601702	LEVER		2	
7	584927201	SPACER		2	
8	539102720	GAS SPRING		2	
9	581437501	BLOCK		2	
10	585831601	BOOT		2	
11	585488202	FLANGE		2	
12	588604901	ROD	RIGHT	1	
13	588605001	ROD	LEFT	1	
14	532199849	SPRING RETAINER		2	
15	525392902	GRIP		2	
16	874780844	BOLT		2	
17	585986101	BOLT		8	
18	874490512	BOLT		4	
19	874780520	BOLT		4	
20	585985901	BOLT		2	
21	587885301	SCREW		2	
22	539108010	NUT		10	
23	539112899	NUT, 5/16–18, NYLOC		4	
24	585986001	NUT		4	
25	539990585	NUT		2	
26	873800500	LOCK NUT		2	
27	587614201	WASHER		4	
28	819111116	WASHER		1	

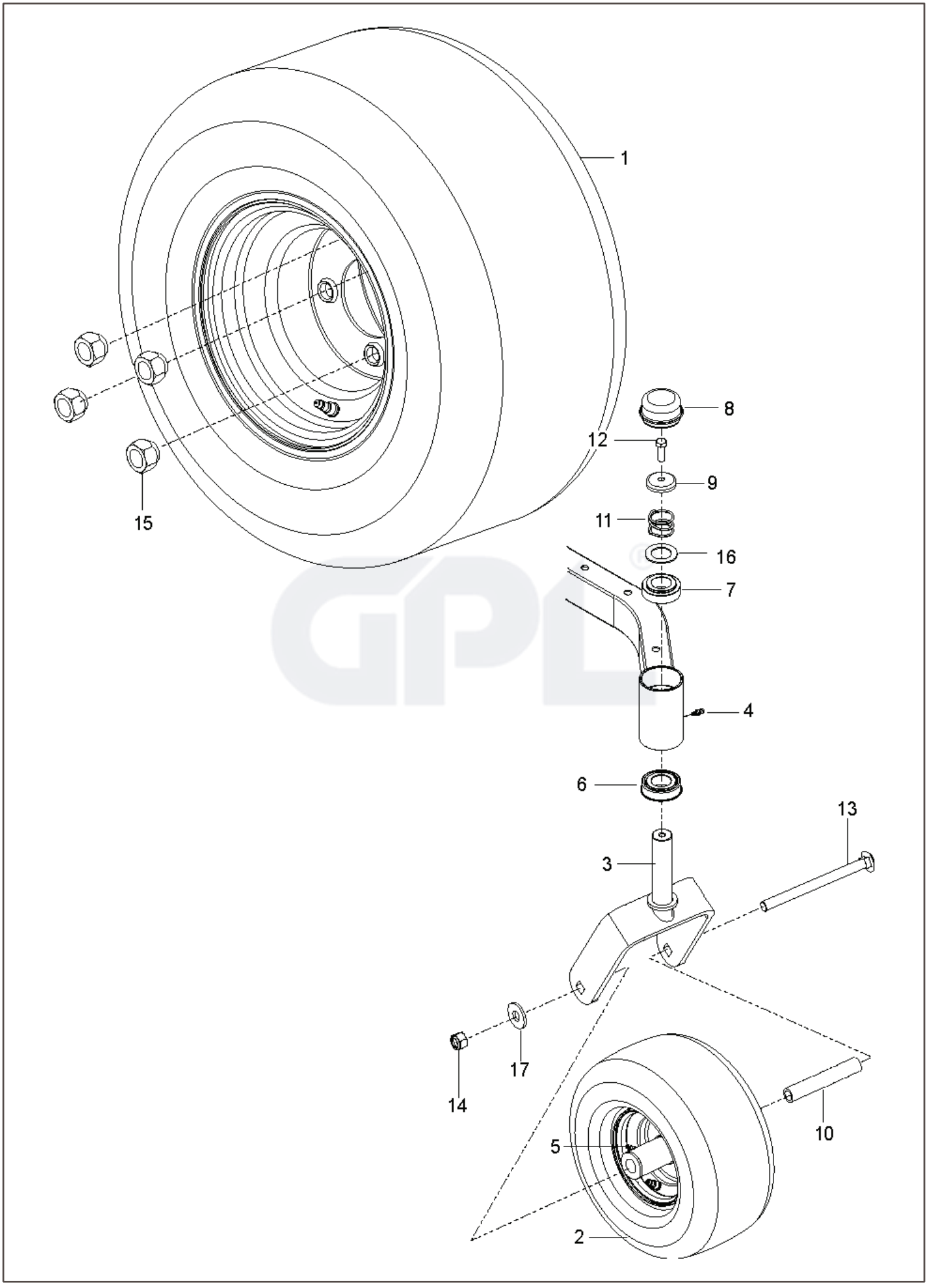
1
15
8
12
9
11
16
7
4
6
13
3
17
14
10
5
2

REF.	PART NO.	DESCRIPTION	REMARK	QTY.	KIT
1	590486601	WHEEL		2	
2	576588602	WHEEL ASSY		2	
3	586650302	YOKE		2	
4	539115638	FITTING		2	
5	539115638	FITTING		2	
6	539112660	BEARING		2	
7	539117901	BUSHING		2	
8	539102535	CAP		2	
9	539115749	CASTER PLUG		2	
10	585995401	SPACER		1	
11	539115747	SPRING		2	
12	874950516	SCREW		2	
13	576601501	SCREW		2	
14	873930800	NUT		2	
15	587653902	NUT		8	
16	539115675	WASHER		2	
17	819182212	WASHER		1	