Z 248F, 967953902-00, 2018-09

SPARE PARTS LIST

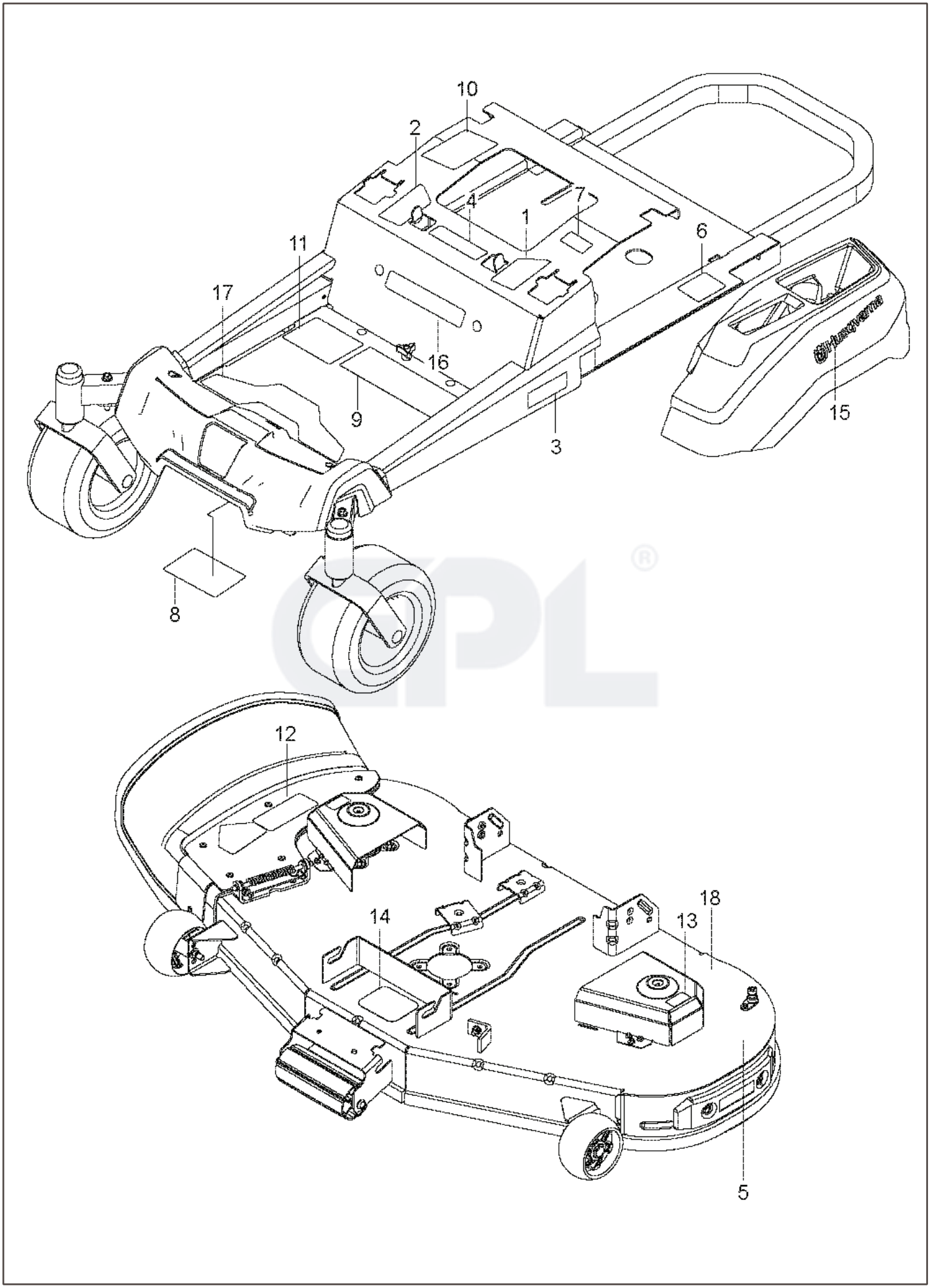
10
2
4
7
1
6
11
17
16
9
3
15
8
12
14
18
13
5

REF.	PART NO.	DESCRIPTION	REMARK	QTY.	KIT
1	587595601	DECAL		1	
2	587595501	DECAL		1	
3	587220301	DECAL		1	
4	539105745	DECAL		1	
5	590885001	DECAL		1	
6	539108385	DECAL		1	
7	539108386	DECAL		1	
8	539109897	DECAL		1	
9	590485501	DECAL		1	
10	532423829	DECAL		1	
11	588035101	DECAL		1	
12	586978801	DECAL		1	
13	589357901	DECAL		1	
14	539112620	DECAL		1	
15	577469001	DECAL		2	
16	591357301	DECAL		1	
17	587000701	PAD		1	
18	592898301	DECAL		1	

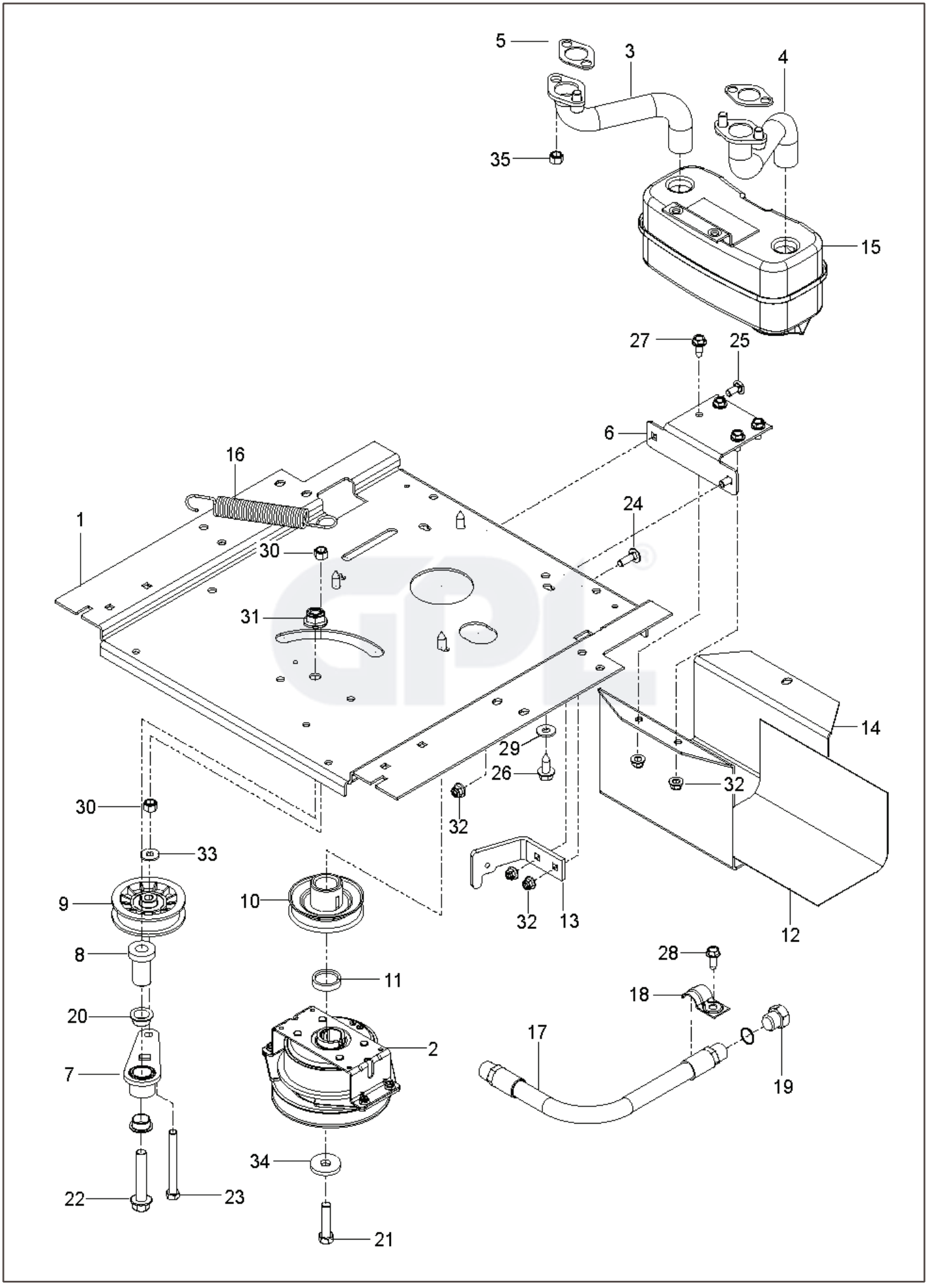
5
3
4
35
15
27
25
6
16
24
1
30
31
14
29
26
32
32
30
33
9
10
32
13
12
8
28
11
18
20
17
2
7
19
34
22
23
21

REF.	PART NO.	DESCRIPTION	REMARK	QTY.	KIT
1	593898602	PLATE		1	
2	587241601	CLUTCH		1	
3	583955701	TUBE		1	
4	583955601	TUBE		1	
5	532178151	MUFFLER GASKET		1	
6	581886702	BRACKET		1	
7	532448145	ARM		1	
8	582538901	SPINDLE		1	
9	539110311	PULLEY		1	
10	587537401	PULLEY		1	
11	587660101	SPACER		1	
12	539132859	HEAT SHIELD		1	
13	587633302	STOP		1	
14	587451202	GUARD		1	
15	539131604	MUFFLER ASSY		1	
16	532196105	SPRING		1	
17	584825501	HOSE ASSY		1	
18	539101363	CLAMP		1	
19	585807101	PLUG		2	
20	501603701	BEARING		1	
21	581332803	BOLT		1	
22	582539501	BOLT		1	
23	874520656	BOLT		2	
24	539990208	SCREW		2	
25	539990316	BOLT		4	
26	874780620	BOLT		1	
27	817490512	SCREW		4	
28	817490410	SCREW		4	
29	539990118	WASHER		1	
30	539976979	NUT		1	
31	521991101	NUT		5	
32	539112899	NUT, 5/16-18, NYLOC		1	
33	539990692	WASHER		2	
34	532126197	WASHER		1	
35	532184362	NUT		1	
	589543901	INSTRUCTION		1	
	000000000	W/O DESCRIPTION	Engine, Kawasaki FR651V 21.5 HP, For replacement parts, see a Kawasaki dealer	1	

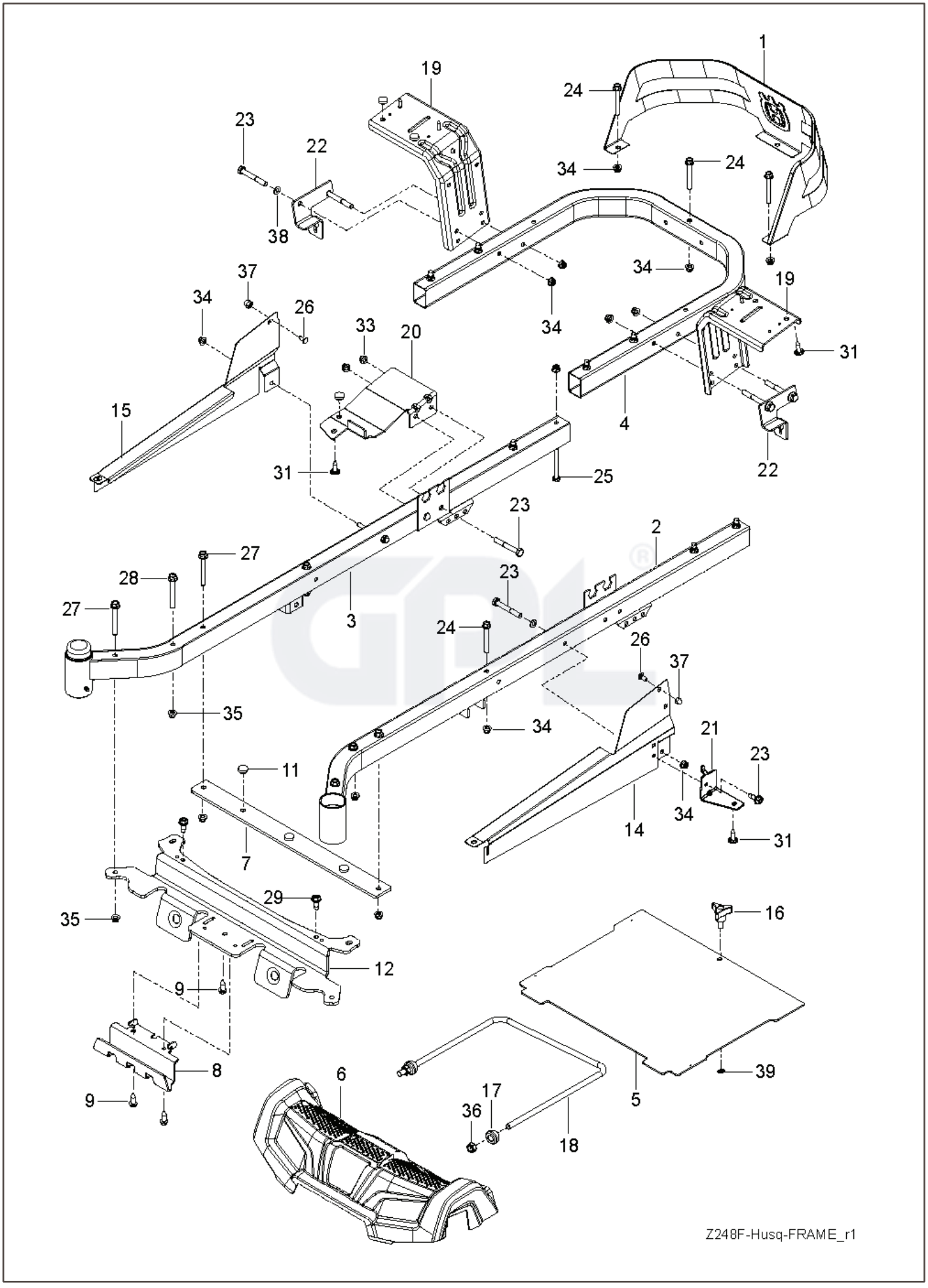
1
19
24
23
22
38
34
24
34
37
34
26
33
20
34
19
31
15
4
31
25
22
23
2
27
28
27
3
23
24
26
37
35
34
21
23
11
14
34
31
7
29
35
16
12
9
39
8
9
6
17
36
5
18
Z248F-Husq-FRAME_r1

REF.	PART NO.	DESCRIPTION	REMARK	QTY.	KIT
1	585039802	GUARD		1	
2	589283302	FRAME TUBE		1	
3	589283402	FRAME TUBE		1	
4	584991002	TUBE		1	
5	522842902	PLATE		1	
6	586703801	FRONT COVER		1	
7	585523004	SUPPORT		1	
8	585523204	SKID PLATE		1	
9	817000510	BOLT		1	
11	585989301	BUMPER		7	
12	585523104	CROSS MEMBER		1	
14	585331602	COVER		1	
15	585331502	COVER		1	
16	539104411	KNOB		1	
17	532195263	BUSHING		2	
18	521938101	LINK		1	
19	580501302	BRACKET		2	
20	585523404	SUPPORT		1	
21	585523604	SUPPORT		1	
22	585474302	BRACKET		2	
23	874780536	BOLT		7	
24	874780544	BOLT		5	
25	874780648	BOLT		8	
26	585940001	BOLT		2	
27	577117701	SCREW		4	
28	586654301	BOLT		2	
29	586881101	BOLT		2	
31	532416358	SCREW		6	
33	873900500	NUT		2	
34	539112899	NUT, 5/16–18, NYLOC		9	
35	521996501	NUT		8	
36	539119124	NUT		2	
37	585938101	NUT		2	
38	819111116	WASHER		6	
39	532423063	WASHER		1	

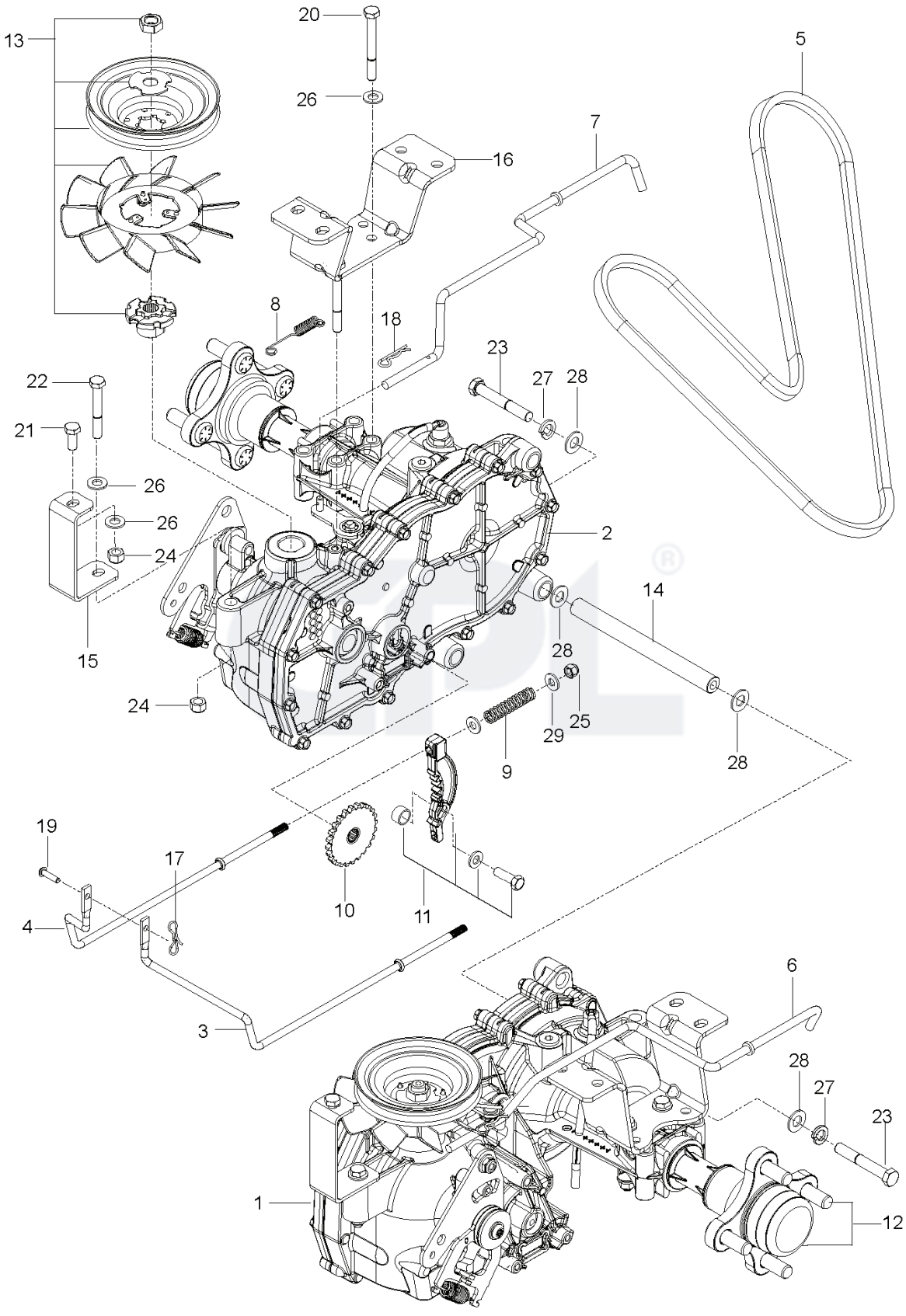
13
20
26
5
7
16
8
18
23
27
28
22
21
26
26
24
2
14
28
15
24
28
29
25
9
28
19
17
10
11
4
3
6
28
27
23
1
12

REF.	PART NO.	DESCRIPTION	REMARK	QTY.	KIT
1	510375601	TRANSMISSION		1	
2	510375602	TRANSMISSION		1	
3	574030501	LINKAGE		1	
4	574030502	LINKAGE		1	
5	539110411	BELT		1	
6	585474401	ROD		1	
7	585474501	ROD		1	
8	586665101	SPRING		2	
9	539110342	SPRING		2	
10	539120080	DISC		2	
11	539120079	ARM		2	
12	575507001	KIT		1	
13	501403602	TRANSMISSION KIT		2	
14	510184104	SPACING TUBE		2	
15	580806502	SUPPORT		2	
16	580806602	BRACKET		2	
17	587225301	PIN		1	
18	539976988	PIN		4	
19	587115301	PEN		1	
20	874780544	BOLT		4	
21	539976934	SCREW		2	
22	874780536	BOLT		2	
23	539990637	SCREW		4	
24	873800500	LOCK NUT		8	
25	539976978	NUT		2	
26	819111116	WASHER		16	
27	539990118	WASHER		4	
28	819131316	WASHER		8	
29	819091016	WASHER		4	

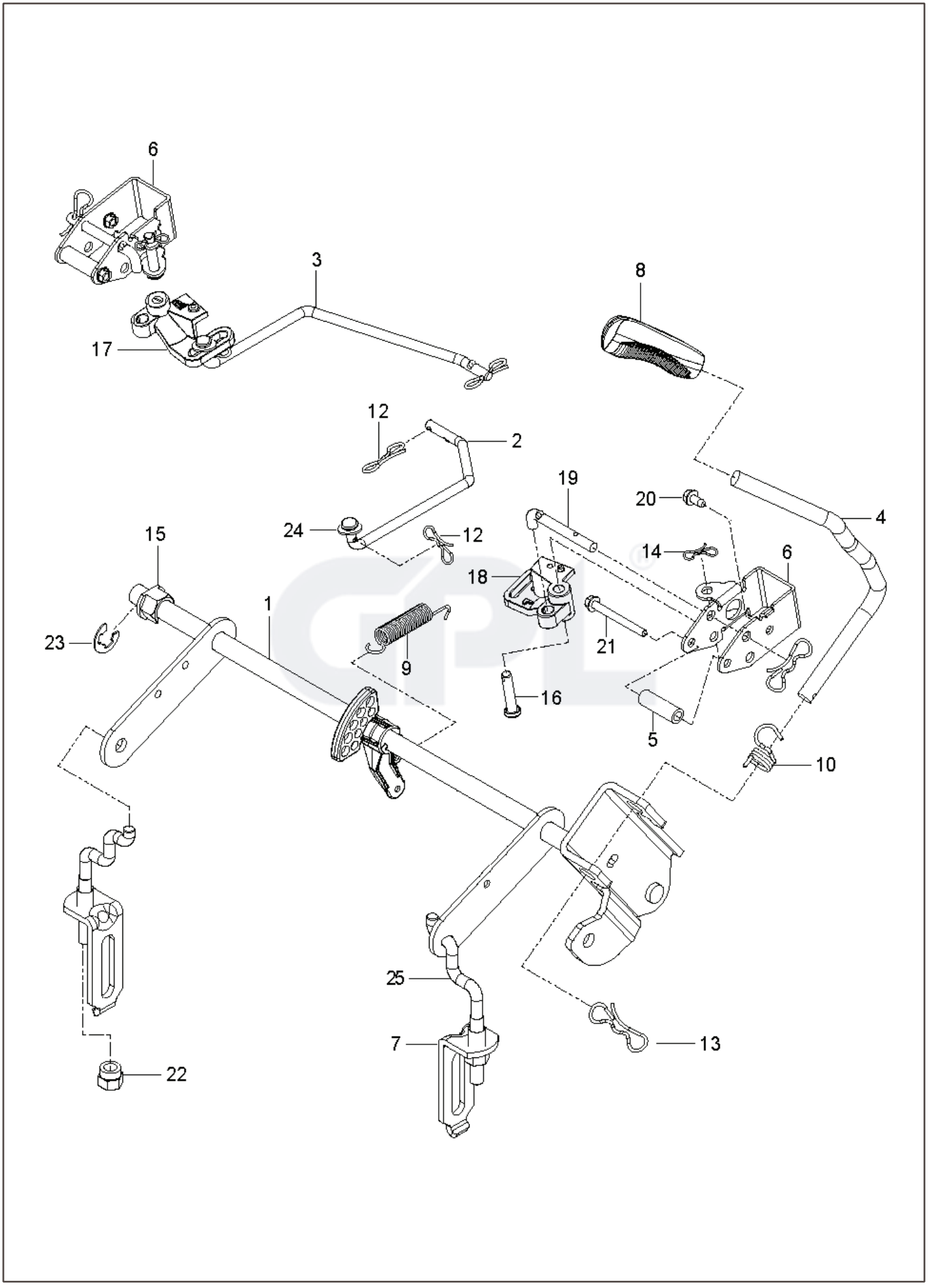
6
3
17
8
12
2
19
20
4
24
12
14
6
15
18
1
23
9
21
16
5
10
25
7
13
22

REF.	PART NO.	DESCRIPTION	REMARK	QTY.	KIT
1	586429702	SHAFT ASSY		1	15, 23
2	586457101	LINK		1	
3	586457201	LINK		1	
4	586728701	ELECTRONIC BOX		1	8, 10, 13
5	580486101	SPACER		2	
6	585682102	BRACKET		2	
7	522858601	ASSEMBLY		2	22
8	580962301	GRIP		1	
9	586867601	SPRING		1	
10	532196314	SPRING		1	
12	587225301	PIN		4	
13	532194209	SPRING		3	
14	532194208	PIN		2	
15	510184901	BUSHING		2	
16	585701401	PIN		2	
17	586457501	BELLCRANK		1	
18	586457401	BELLCRANK		1	
19	585682001	ROD		2	
20	532137729	SCREW		2	
21	586561301	SCREW		2	
22	532175994	NUT		2	
23	812000002	RETAINER RING		1	
24	819131316	WASHER		2	
25	525847201	LINK		1	

*OPTIONAL

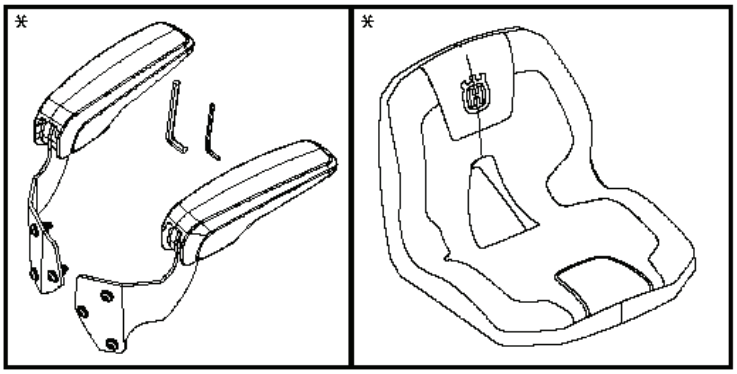

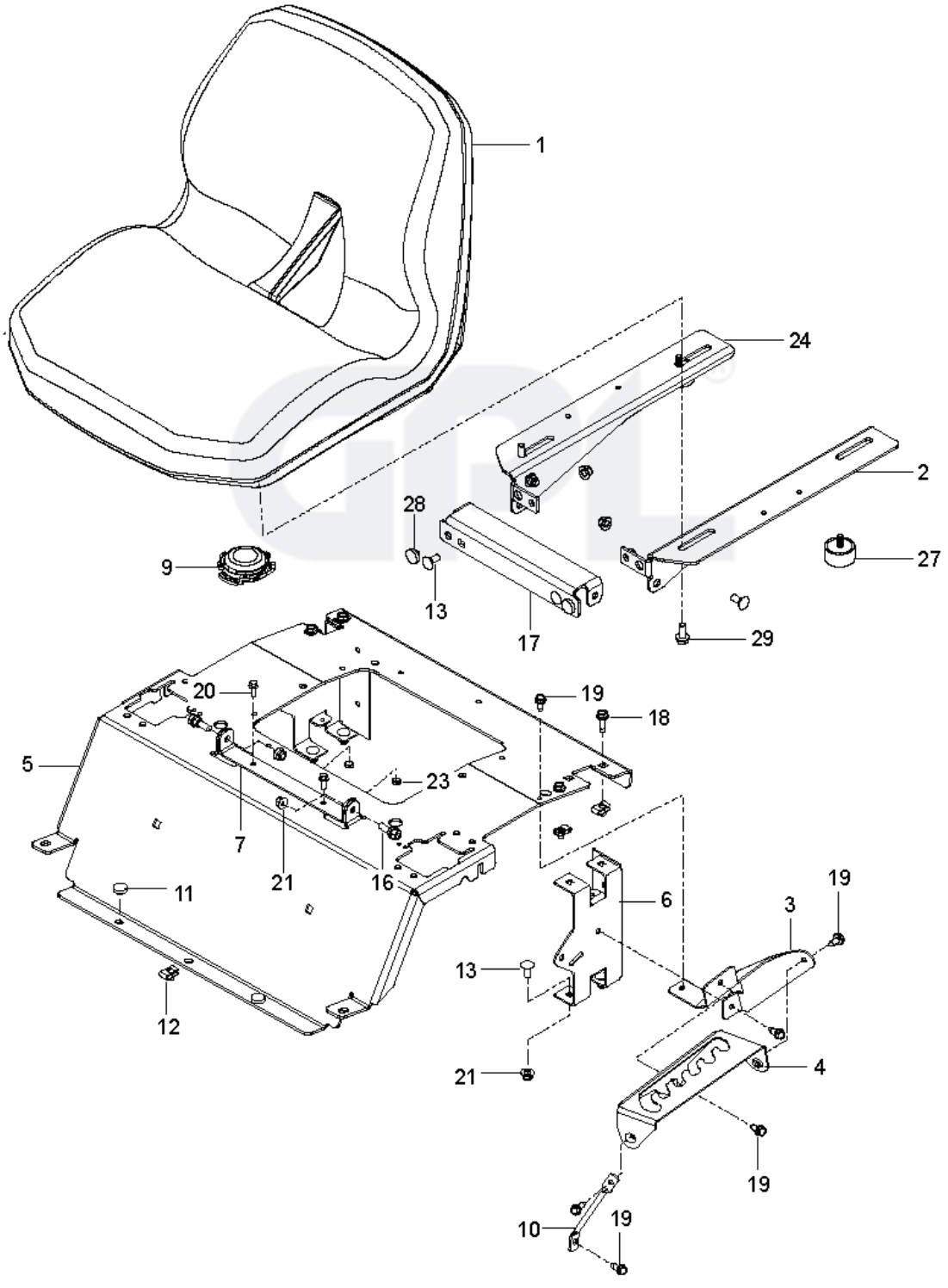

REF.	PART NO.	DESCRIPTION	REMARK	QTY.	KIT
1	597658101	SEAT		1	8
2	596672902	BRACKET		1	
3	586220802	SUPPORT PLATE		1	
4	586221202	PLATE		1	
5	589761206	PLATE		1	
6	580308202	SUPPORT		2	
7	590899903	BRACKET		1	
9	532192749	SWITCH.SEAT.DP W/RAMPS		1	
10	586428601	SUPPORT LEG		1	
11	585989301	BUMPER		2	
12	539104763	CLIP		5	
13	539990316	BOLT		4	
16	539110303	BOLT		2	
17	596673002	BRACKET		4	
18	817490512	SCREW		4	
19	817000510	BOLT		6	
20	589028501	SCREW		1	
21	539112899	NUT, 5/16-18, NYLOC		4	
23	873350400	NUT		2	
24	596679402	BRACKET		4	
27	582478702	BUMPER		1	
28	539102587	ABSORBER		1	
29	874490512	BOLT		1	
	597658203	SERVICE KIT		1	
	597959401	COVER		1	

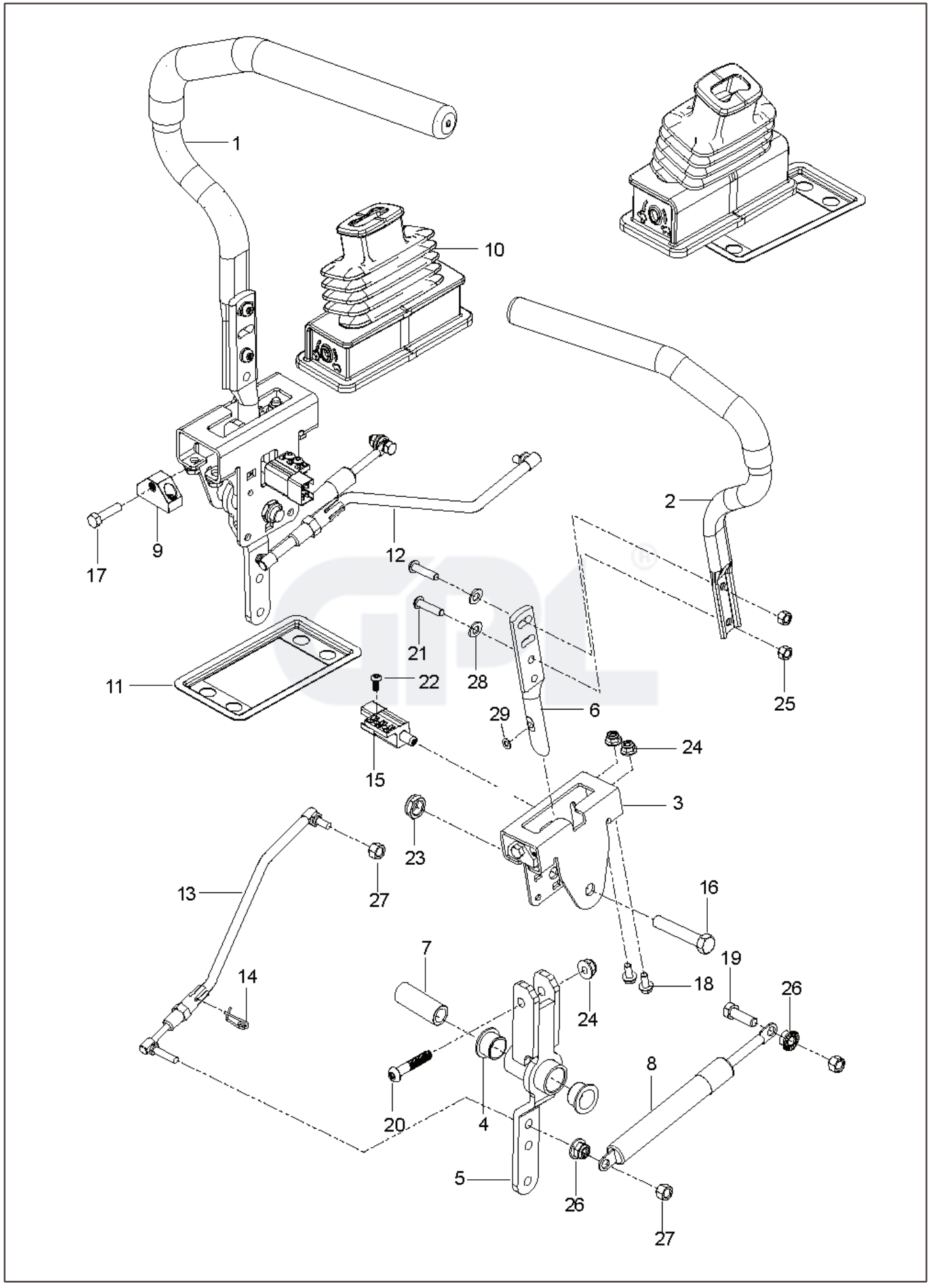
1
10
2
9
17
12
21
28
25
11
22
6
29
24
15
3
23
27
13
16
7
14
18
19
26
24
20
4
8
5
26
27

REF.	PART NO.	DESCRIPTION	REMARK	QTY.	KIT
1	582313803	TUBE		1	
2	582313804	TUBE		1	
3	585124705	BRACKET		2	
4	539131518	BEARING		4	
5	576140301	LEVER		2	
6	587601702	LEVER		2	
7	584927201	SPACER		2	
8	539102720	GAS SPRING		2	
9	581437501	BLOCK		2	
10	585831601	BOOT		2	
11	585488202	FLANGE		2	
12	588604901	ROD		2	14
13	588605001	ROD		2	14
14	532199849	SPRING RETAINER		2	
15	587601501	SWITCH		2	
16	874780844	BOLT		2	
17	585986101	BOLT		2	
18	874490512	BOLT		8	
19	539990209	SCREW		2	
20	587885301	SCREW		2	
21	585985901	BOLT		4	
22	574822701	SCREW		2	
23	539108010	NUT		2	
24	539112899	NUT, 5/16–18, NYLOC		10	
25	585986001	NUT		4	
26	539990585	NUT		4	
27	873800500	LOCK NUT		4	
28	819111116	WASHER		4	
29	587614201	WASHER		1	

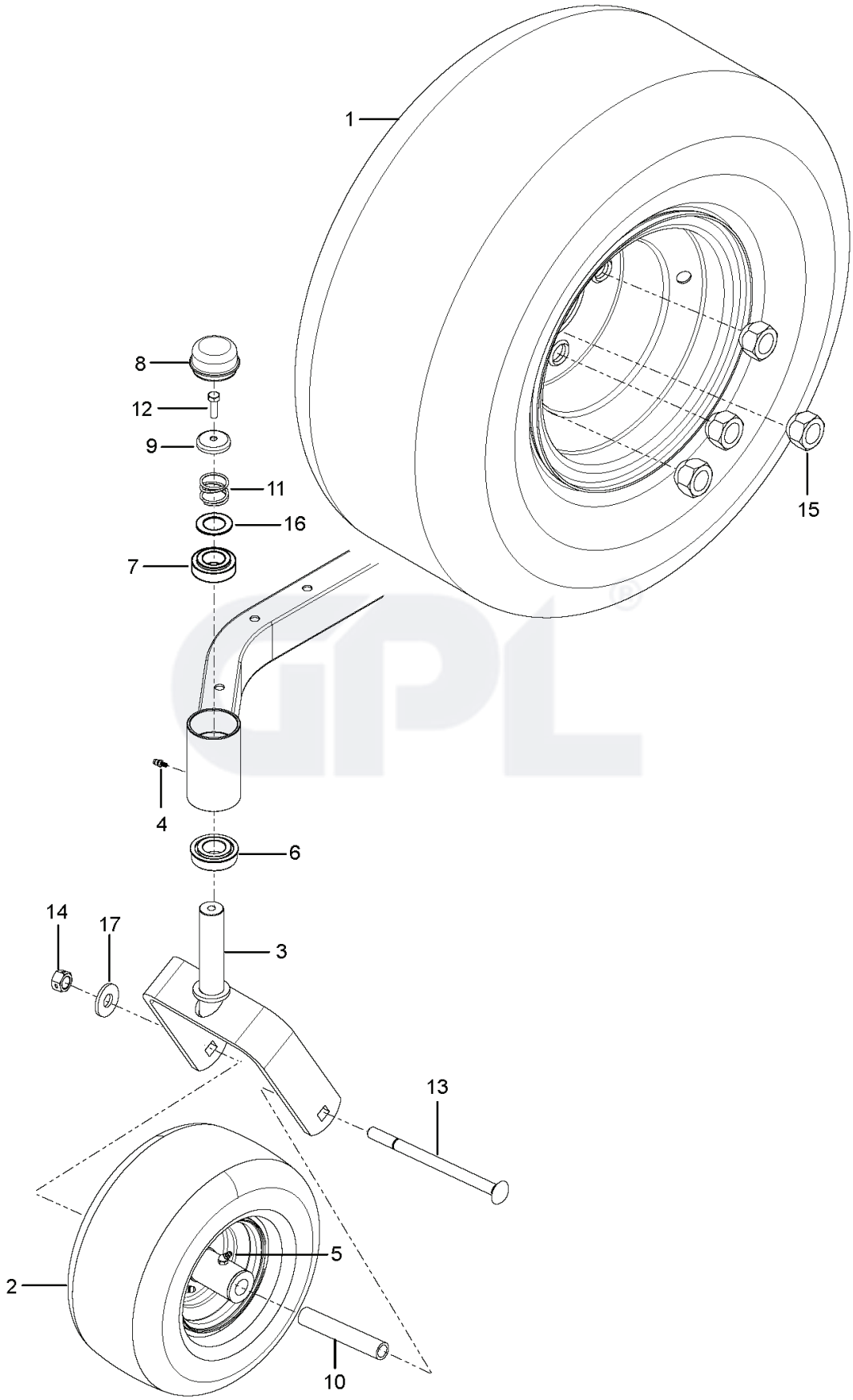
1
8
12
9
11
16
7
4
6
14
17
3
13
5
2
10
15

REF.	PART NO.	DESCRIPTION	REMARK	QTY.	KIT
1	590486601	WHEEL		2	
2	576588602	WHEEL ASSY		2	
3	586650302	YOKE		2	
4	539115638	FITTING		2	
5	539103300	NIPPLE		2	
6	539112660	BEARING		2	
7	539117901	BUSHING		2	
8	539102535	CAP		2	
9	539115749	CASTER PLUG		2	
10	585995401	SPACER		2	
11	539115747	SPRING		2	
12	874950516	SCREW		2	
13	576601501	SCREW		2	
14	873930800	NUT		2	
15	587653902	NUT		8	
16	539115675	WASHER		2	
17	819182212	WASHER		2	

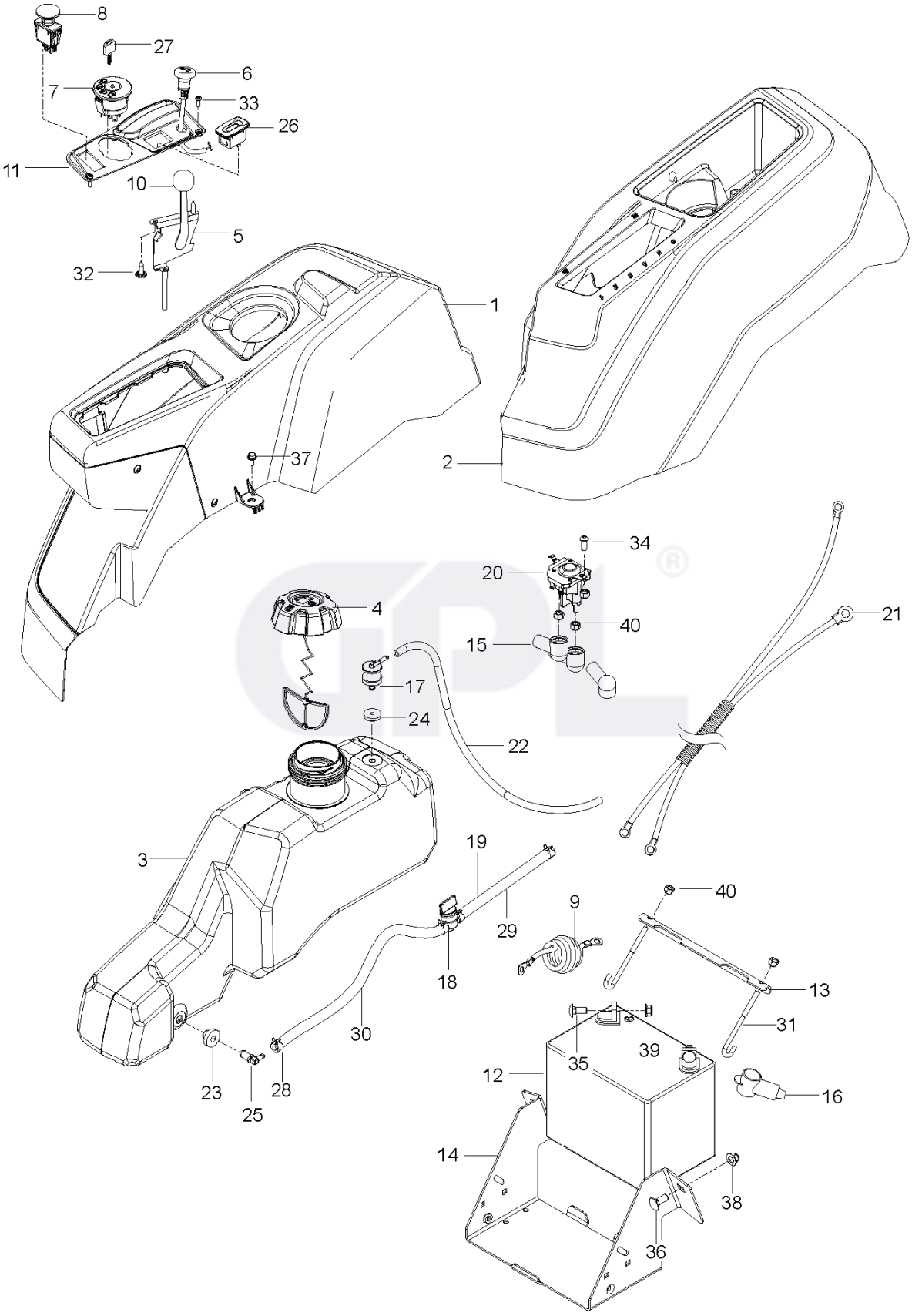
8
27
6
7
33
26
11
10
5
32
1
37
2
34
20
4
40
21
15
17
24
22
3
19
40
9
29
18
13
30
31
39
35
12
16
23
28
25
14
38
36

REF.	PART NO.	DESCRIPTION	REMARK	QTY.	KIT
1	585522801	CONSOLE ASSY		1	
2	586621201	CONSOLE ASSY		1	
3	589924702	FUEL TANK ASSY	Fits 2.75" filler neck	1	23, 24, 25
4	585124801	FUEL CAP ASSY	Fits 2.75" filler neck	1	
4	529989702	CAP	Fits 2.00" filler neck	1	
5	539112438	THROTTLE CABLE		1	
6	586881501	CHOKE CONTROL ASSY		1	
7	539107541	IGNITION SWITCH		1	
8	582107602	SWITCH		1	
9	586108201	HARNESS		1	
10	539133049	KNOB ROUND BALL		1	
11	585522701	CONTROL PANEL		1	
12	539102436	BATTERY		1	
13	510030003	BRACKET		1	
14	582609602	BOX		1	
15	532131563	COVER		3	
16	539102759	INSULATOR		1	
17	576618101	TANK VENT		1	
18	539916325	VALVE		1	
19	586123906	FUEL HOSE		1	18, 28, 29, 30
20	582042801	SOLENOID		1	
21	587198601	HARNESS		1	
22	587044550	HOSE		1	
23	532003645	BUSHING		1	
24	532437492	GROMMET		1	
25	532139277	NIPPLE		1	
26	586161801	HOUR METER		1	
27	532411933	KEY		1	
28	532123487	HOSE CLAMP		4	
29	587044810	HOSE		1	
30	587044818	HOSE		1	
31	588839401	HOOK		2	
32	532141841	SCREW		2	
33	545227101	SCREW		2	
34	539111229	SCR 1/4–20 X 5/8 BTN SKT HD ZD		1	
35	539990316	BOLT		2	
36	539990645	BOLT		2	
37	817490408	SCREW		2	
38	521996501	NUT		2	
39	539112899	NUT, 5/16–18, NYLOC		2	
40	539976978	NUT		5	
	586337301	HARNESS	NOT SHOWN	1	
	586548101	HARNESS		1	
	532109748	RELAY	NOT SHOWN	1	
	505280001	TIE WRAP	NOT SHOWN	1	

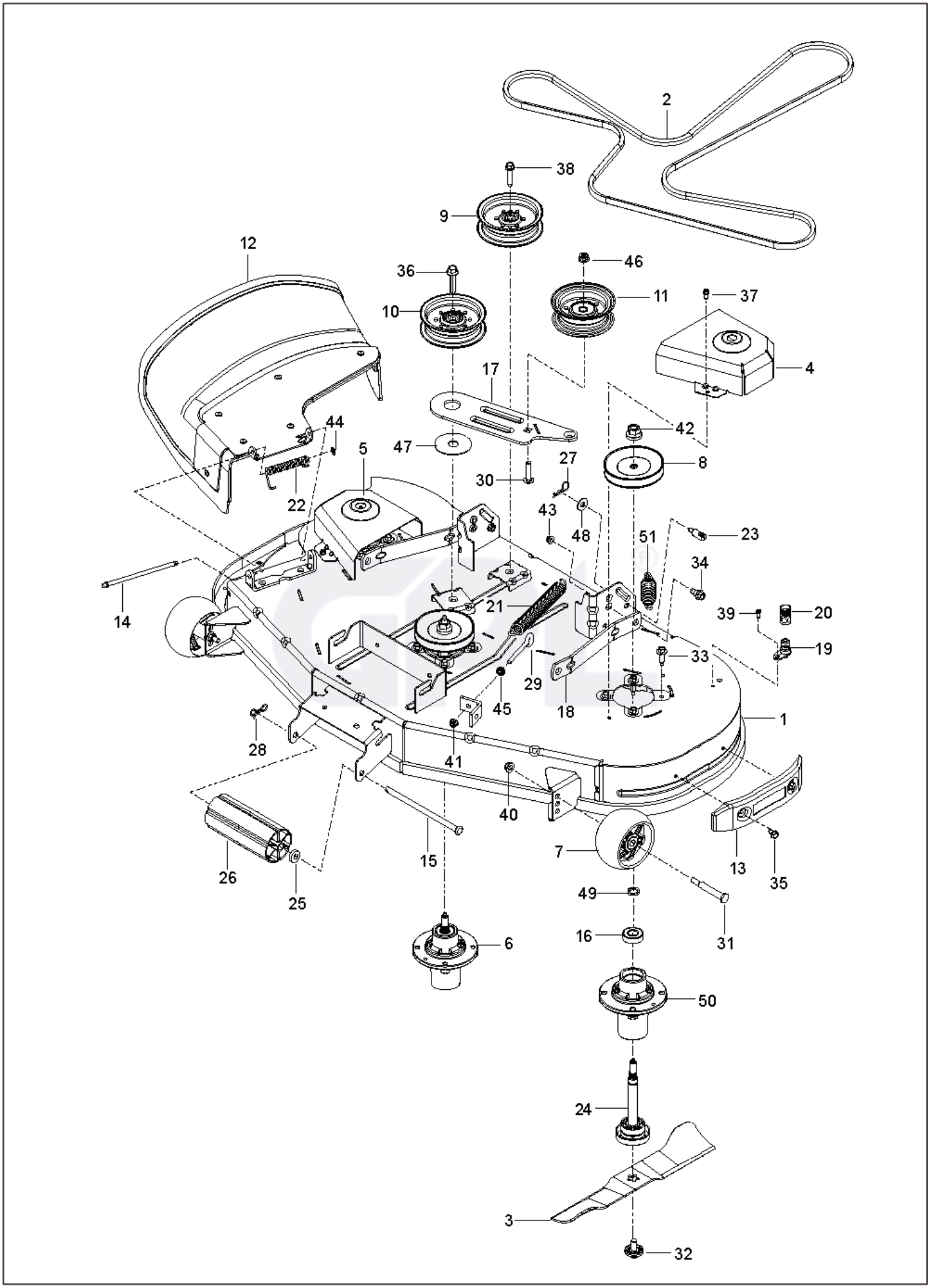
2
38
9
12
36
46
10
11
37
4
17
44
42
5
47
27
8
30
22
43
48
51
23
34
14
21
39
20
19
33
29
45
18
1
28
41
40
7
13
35
26
15
25
49
31
16
6
50
24
3
32

REF.	PART NO.	DESCRIPTION	REMARK	QTY.	KIT
1	583810101	SERVICE KIT		1	
2	582558001	BELT		1	
3	588811002	BLADE		2	
4	588812802	COVER		1	
5	588812402	COVER		1	
6	539131898	SPINDLE		3	
7	589527301	WHEEL		2	
8	532173435	PULLEY		3	
9	532196106	PULLEY		1	
10	532196104	PULLEY		1	
11	532193197	PULLEY		1	
12	588980701	DEFLECTOR ASSY		1	
13	582541103	BUMPER		1	
14	532131491	SHAFT		2	
15	532179127	ROD ROLLER NOSE		1	
16	532110485	BEARING		2	
17	588812202	ARM		1	
18	587140502	ARM		2	
19	532415598	HOSE COUPLING		1	
20	532416405	COUPLING		1	
21	582504001	SPRING		1	
22	587354701	SPRING		1	
23	532195161	STUD		2	
24	532187291	SHAFT		3	
25	582360501	BUSHING		1	
26	532176066	ROLLER		1	
27	532194209	SPRING		2	
28	532194208	PIN		1	
29	539115574	EYE BOLT		1	
30	872110614	BOLT		1	
31	532193406	BOLT		2	
32	532193003	SCREW		2	
33	584953901	BOLT		12	
34	532196539	BOLT		2	
35	532170165	BOLT		2	
36	588438301	SCREW		1	
37	532137729	SCREW		4	
38	817490628	SCREW		1	
39	817490410	SCREW		1	
40	521996501	NUT		2	
41	539112899	NUT, 5/16–18, NYLOC		1	
42	532400234	NUT		3	
43	873900500	NUT		2	
44	532110452	NUT		1	
45	539990585	NUT		1	
46	873680600	NUT		1	
47	532178515	WASHER		1	
48	819212113	WASHER		2	
49	532187690	WASHER		3	
50	539131767	MANDREL, HOUSING - CAST IRON		1	
51	539118762	SPRING		1	