Z 248F, 967953903-00, 2018-10

# SPARE PARTS LIST

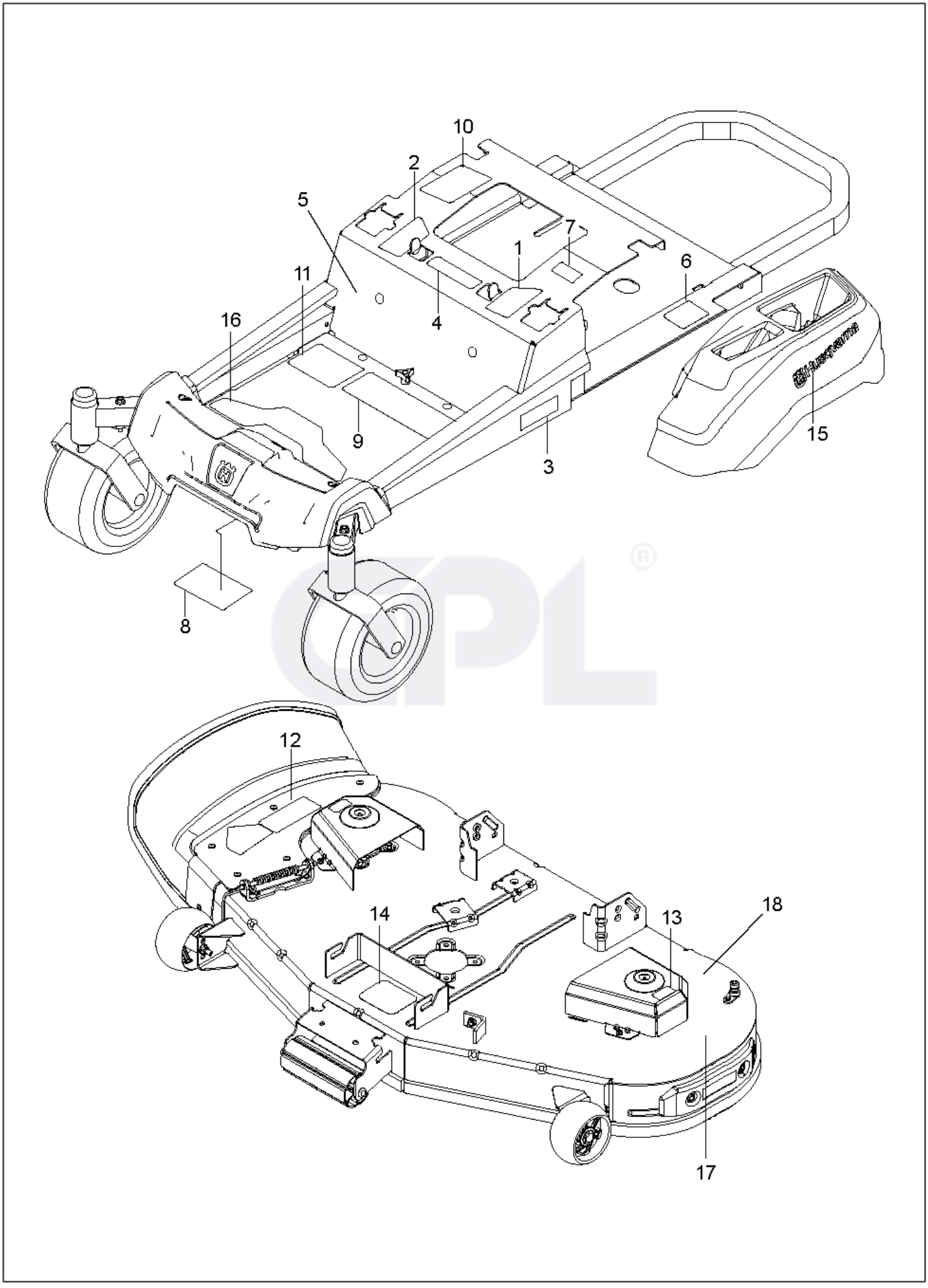
10
2
5
7
1
6
11
4
16
9
3
15
8
12
14
13
18
17

| REF. | PART NO. | DESCRIPTION | REMARK | QTY. | KIT |
|---|---|---|---|---|---|
| 1 | 587595601 | DECAL | | 1 | |
| 2 | 587595501 | DECAL | | 1 | |
| 3 | 587220301 | DECAL | | 1 | |
| 4 | 539105745 | DECAL | | 1 | |
| 5 | 591357301 | DECAL | | 1 | |
| 6 | 539108385 | DECAL | | 1 | |
| 7 | 539108386 | DECAL | | 1 | |
| 8 | 539109897 | DECAL | | 1 | |
| 9 | 590485501 | DECAL | | 1 | |
| 10 | 532423829 | DECAL | | 1 | |
| 11 | 588035101 | DECAL | | 1 | |
| 12 | 586978801 | DECAL | | 1 | |
| 13 | 589357901 | DECAL | | 1 | |
| 14 | 539112620 | DECAL | | 1 | |
| 15 | 577469001 | DECAL | | 2 | |
| 16 | 587000701 | PAD | | 1 | |
| 17 | 590885001 | DECAL | | 1 | |
| 18 | 592898301 | DECAL | | 1 | |

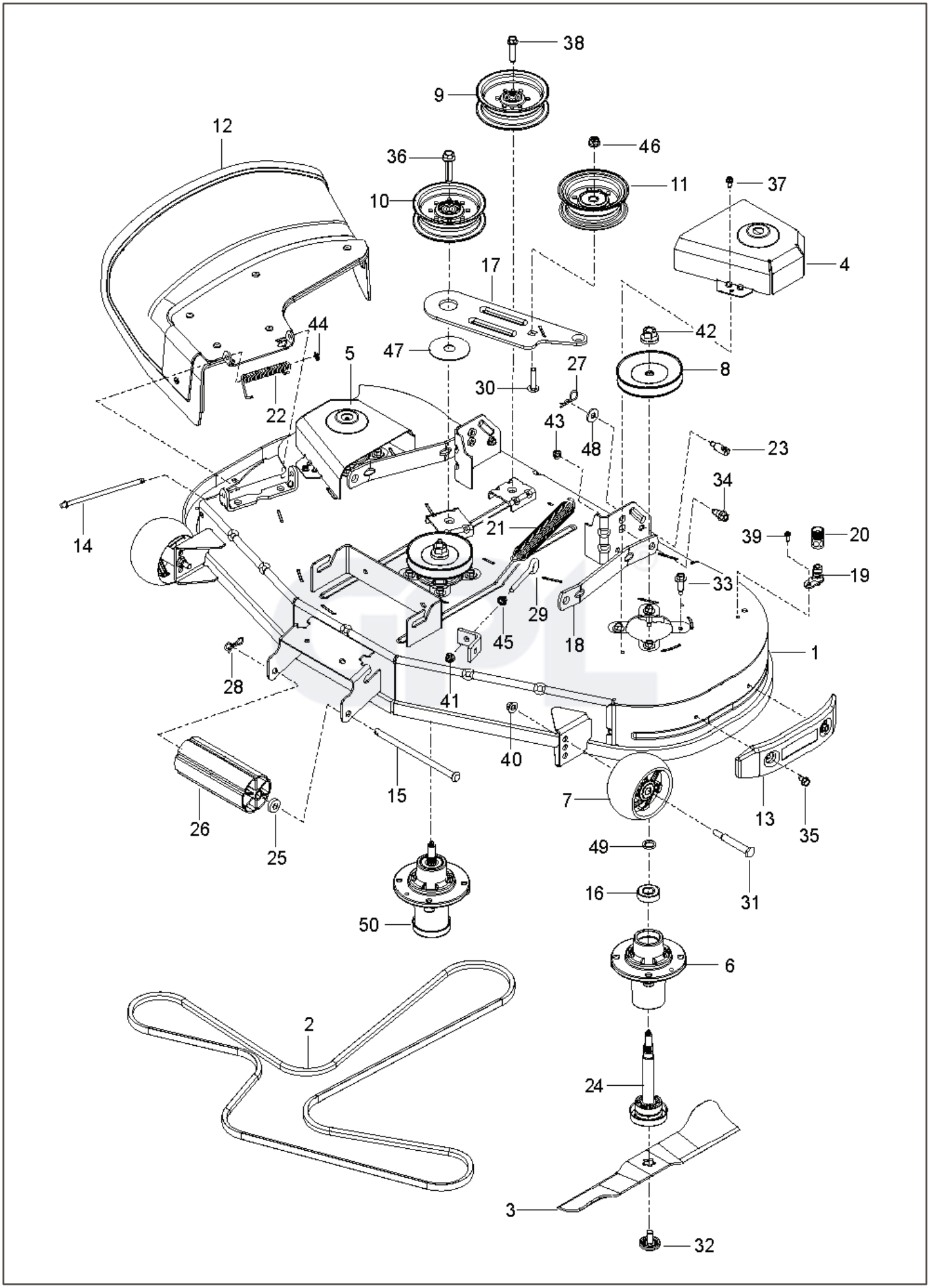
38
9
12
36
46
10
11
37
4
17
44
42
47
5
27
8
30
22
43
48
23
34
14
21
39
20
19
33
29
45
18
1
28
41
40
15
7
13
35
26
25
49
31
16
50
6
2
24
3
32

| REF. | PART NO. | DESCRIPTION | REMARK | QTY. | KIT |
|---|---|---|---|---|---|
| 1 | 588781302 | DECK SHELL ASSY | | 1 | |
| 2 | 582558001 | BELT | | 1 | |
| 3 | 588811002 | BLADE | | 2 | |
| 4 | 588812802 | COVER | | 1 | |
| 5 | 588812402 | COVER | | 1 | |
| 6 | 539131767 | MANDREL. HOUSING - CAST IRON | | 3 | |
| 7 | 589527301 | WHEEL | | 2 | |
| 8 | 532173435 | PULLEY | | 3 | |
| 9 | 532196106 | PULLEY | | 1 | |
| 10 | 532196104 | PULLEY | | 1 | |
| 11 | 532193197 | PULLEY | | 1 | |
| 12 | 588980701 | DEFLECTOR ASSY | | 1 | |
| 13 | 582541101 | BUMPER | | 1 | |
| 14 | 532131491 | SHAFT | | 2 | |
| 15 | 532179127 | ROD ROLLER NOSE | | 1 | |
| 16 | 532110485 | BEARING | | 2 | |
| 17 | 588812202 | ARM | | 1 | |
| 18 | 587140502 | ARM | | 2 | |
| 19 | 532415598 | HOSE COUPLING | | 1 | |
| 20 | 532416405 | COUPLING | | 1 | |
| 21 | 582504001 | SPRING | | 1 | |
| 22 | 587354701 | SPRING | | 1 | |
| 23 | 532195161 | STUD | | 2 | |
| 24 | 532187291 | SHAFT | | 3 | |
| 25 | 582360501 | BUSHING | | 1 | |
| 26 | 532176066 | ROLLER | | 1 | |
| 27 | 532194209 | SPRING | | 2 | |
| 28 | 532194208 | PIN | | 1 | |
| 29 | 539115574 | EYE BOLT | | 1 | |
| 30 | 872110614 | BOLT | | 1 | |
| 31 | 532193406 | BOLT | | 2 | |
| 32 | 532193003 | SCREW | | 2 | |
| 33 | 584953901 | BOLT | | 12 | |
| 34 | 532196539 | BOLT | | 2 | |
| 35 | 532170165 | BOLT | | 2 | |
| 36 | 588438301 | SCREW | | 1 | |
| 37 | 532137729 | SCREW | | 4 | |
| 38 | 817490628 | SCREW | | 1 | |
| 39 | 817490410 | SCREW | | 1 | |
| 40 | 521996501 | NUT | | 2 | |
| 41 | 539112899 | NUT. 5/16–18. NYLOC | | 1 | |
| 42 | 532400234 | NUT | | 3 | |
| 43 | 873900500 | NUT | | 2 | |
| 44 | 532110452 | NUT | | 1 | |
| 45 | 539990585 | NUT | | 1 | |
| 46 | 873680600 | NUT | | 1 | |
| 47 | 532178515 | WASHER | | 1 | |
| 48 | 819212113 | WASHER | | 2 | |
| 49 | 532187690 | WASHER | | 3 | |
| 50 | 539131898 | SPINDLE | | 1 | |
| | 532105304 | HUB CAP | | 1 | |
| | 532425417 | PAD | | 1 | |

*OPTIONAL

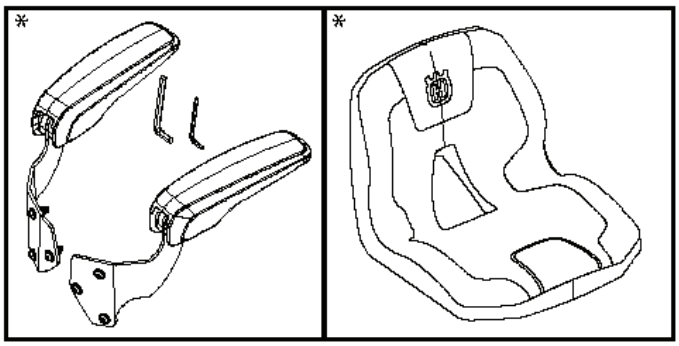


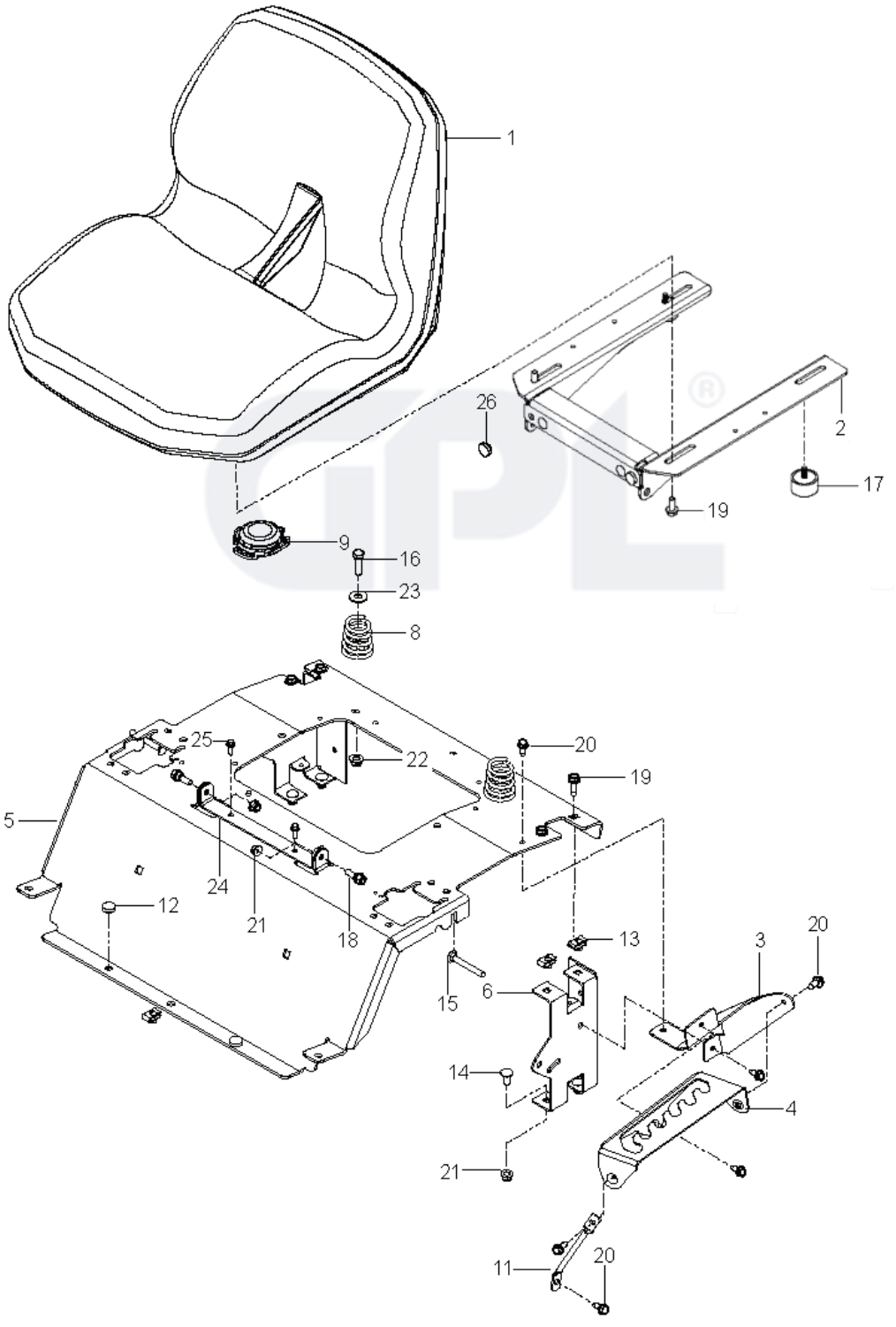

| REF. | PART NO. | DESCRIPTION | REMARK | QTY. | KIT |
|---|---|---|---|---|---|
| 1 | 597658101 | SEAT | | 1 | 9 |
| 2 | 596992703 | BRACKET | | 1 | |
| 3 | 586220802 | SUPPORT PLATE | | 1 | |
| 4 | 586221202 | PLATE | | 1 | |
| 5 | 589481206 | PLATE | | 1 | |
| 6 | 580308202 | SUPPORT | | 2 | |
| 8 | 589483501 | SPRING | | 2 | |
| 9 | 532192749 | SWITCH.SEAT.DP W/RAMPS | | 1 | |
| 11 | 586428601 | SUPPORT LEG | | 1 | |
| 12 | 585989301 | BUMPER | | 2 | |
| 13 | 539104763 | CLIP | | 5 | |
| 14 | 539990316 | BOLT | | 4 | |
| 15 | 510422701 | SCREW | | 2 | |
| 16 | 874780620 | BOLT | | 2 | |
| 17 | 582478702 | BUMPER | | 1 | |
| 18 | 539110303 | BOLT | | 2 | |
| 19 | 874490512 | BOLT | | 4 | |
| 20 | 817000510 | BOLT | | 6 | |
| 21 | 539112899 | NUT, 5/16–18, NYLOC | | 4 | |
| 22 | 873900400 | NUT | | 2 | |
| 23 | 819141614 | WASHER | | 1 | |
| 24 | 590899903 | BRACKET | | 2 | |
| 25 | 589028501 | SCREW | | 1 | |
| 26 | 539102587 | ABSORBER | | 1 | |
| | 597658203 | SERVICE KIT | | 1 | |
| | 597959401 | COVER | | 1 | |

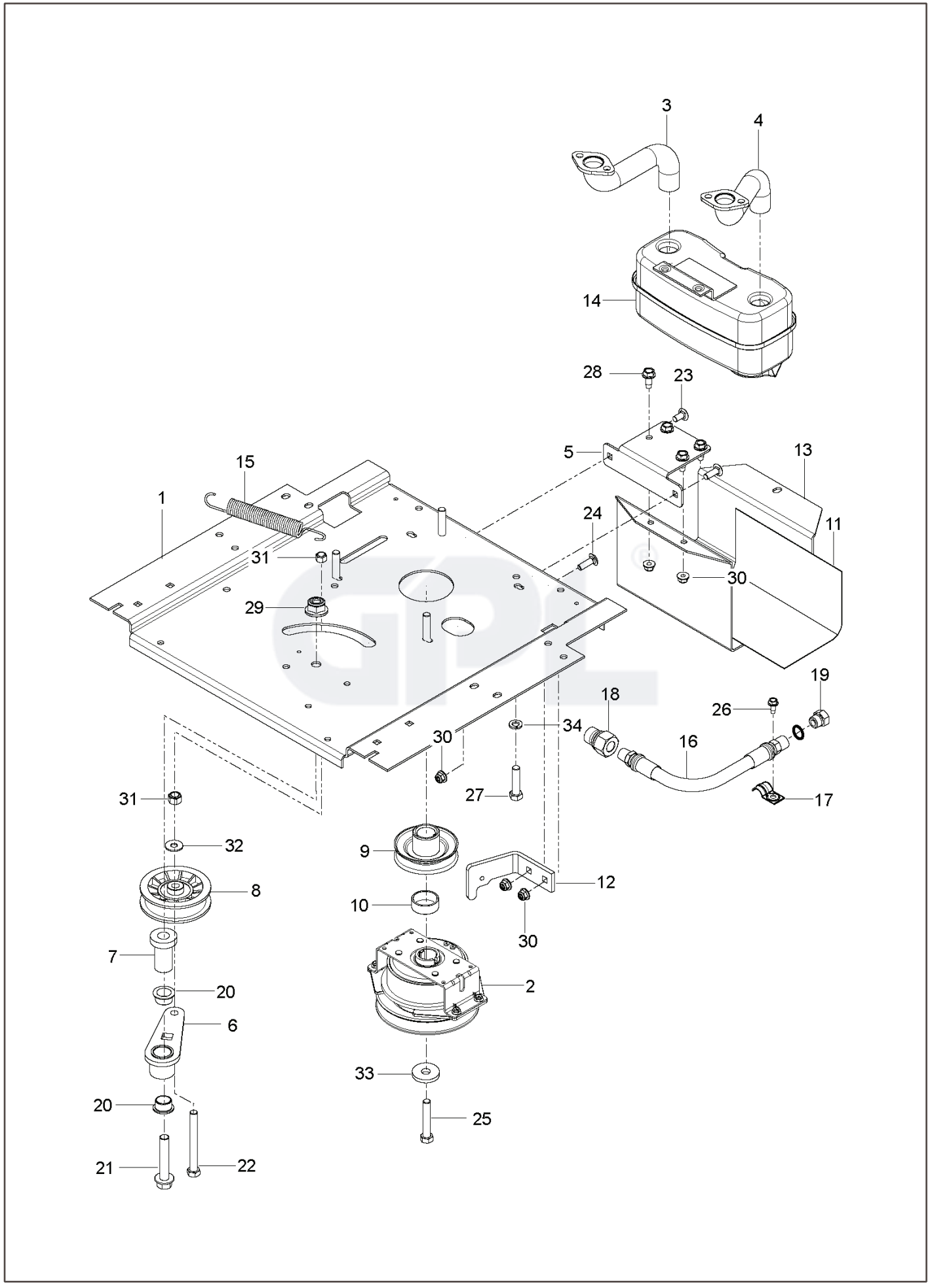
3
4
14
28
23
5
13
15
1
24
11
31
30
29
19
18
26
34
30
16
27
17
31
32
9
12
8
10
30
7
20
2
6
33
20
25
21
22

| REF. | PART NO. | DESCRIPTION | REMARK | QTY. | KIT |
|---|---|---|---|---|---|
| 1 | 593898602 | PLATE | | 1 | |
| 2 | 587241601 | CLUTCH | | 1 | |
| 2 | 505287301 | CLUTCH | USE ON 967009801-00 | 1 | |
| 3 | 583955701 | TUBE | | 1 | |
| 4 | 583955601 | TUBE | | 1 | |
| 5 | 581886702 | BRACKET | | 1 | |
| 6 | 532448145 | ARM | | 1 | |
| 7 | 582538901 | SPINDLE | | 1 | |
| 8 | 539110311 | PULLEY | | 1 | |
| 9 | 587537401 | PULLEY | | 1 | |
| 10 | 587660101 | SPACER | | 1 | |
| 11 | 539132859 | HEAT SHIELD | | 1 | |
| 12 | 587633302 | STOP | | 1 | |
| 13 | 587451202 | GUARD | | 1 | |
| 14 | 539131604 | MUFFLER ASSY | | 1 | |
| 15 | 532196105 | SPRING | | 1 | |
| 16 | 584825501 | HOSE ASSY | | 1 | |
| 17 | 539101363 | CLAMP | | 1 | |
| 18 | 522599001 | ADAPTER | | 1 | |
| 19 | 585807101 | PLUG | | 1 | |
| 20 | 501603701 | BEARING | | 2 | |
| 21 | 582539501 | BOLT | | 1 | |
| 22 | 874520656 | BOLT | | 1 | |
| 23 | 539990316 | BOLT | | 2 | |
| 24 | 539990208 | SCREW | | 2 | |
| 25 | 581332803 | BOLT | | 1 | |
| 26 | 817490410 | SCREW | | 1 | |
| 27 | 874780620 | BOLT | | 4 | |
| 28 | 817490512 | SCREW | | 4 | |
| 29 | 521991101 | NUT | | 1 | |
| 30 | 539112899 | NUT, 5/16-18, NYLOC | | 5 | |
| 31 | 539976979 | NUT | | 2 | |
| 32 | 819121414 | WASHER | | 1 | |
| 33 | 532126197 | WASHER | | 1 | |
| 34 | 539990118 | WASHER | | 4 | |
| -- | 532178151 | MUFFLER GASKET | | 1 | |
| -- | 532184362 | NUT | | 1 | |
| -- | 539108120 | NUT | | 1 | |

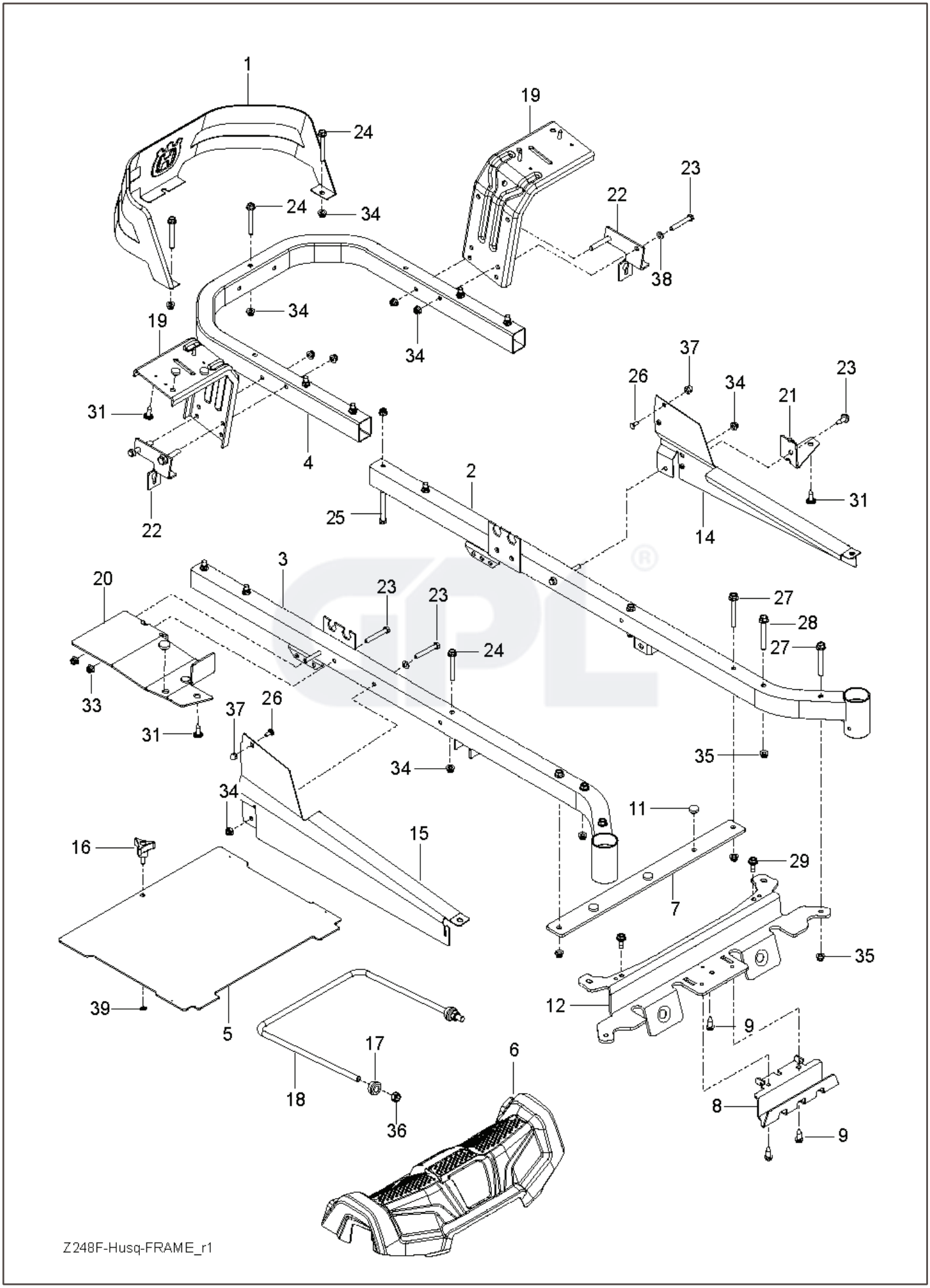
1
19
24
23
22
24
34
38
34
19
34
37
26
34
23
21
31
4
2
31
25
14
22
3
20
23
23
27
28
24
27
33
37
26
31
35
34
34
11
15
16
29
7
35
39
12
5
9
17
6
18
8
36
9
Z248F-Husq-FRAME_r1

| REF. | PART NO. | DESCRIPTION | REMARK | QTY. | KIT |
|---|---|---|---|---|---|
| 1 | 585039802 | GUARD | | 1 | |
| 2 | 589283302 | FRAME TUBE | | 1 | |
| 3 | 589283402 | FRAME TUBE | | 1 | |
| 4 | 584991002 | TUBE | | 1 | |
| 5 | 581448602 | PLATE | W/ SFTY DECALS | 1 | |
| 6 | 586703801 | FRONT COVER | W/ DECALS | 1 | |
| 7 | 585523004 | SUPPORT | | 1 | |
| 8 | 585523204 | SKID PLATE | | 7 | |
| 9 | 817000510 | BOLT | | 1 | |
| 11 | 585989301 | BUMPER | | 1 | |
| 12 | 585523104 | CROSS MEMBER | | 1 | |
| 14 | 585331602 | COVER | | 2 | |
| 15 | 585331502 | COVER | | 1 | |
| 16 | 539104411 | KNOB | | 2 | |
| 17 | 532195263 | BUSHING | | 1 | |
| 18 | 585523604 | SUPPORT | | 1 | |
| 19 | 521938101 | LINK | | 2 | |
| 20 | 585523404 | SUPPORT | | 8 | |
| 21 | 585523604 | SUPPORT | | 5 | |
| 22 | 585474302 | BRACKET | | 8 | |
| 23 | 874780536 | BOLT | | 2 | |
| 24 | 874490544 | SCREW | | 4 | |
| 25 | 874780648 | BOLT | | 2 | |
| 26 | 585940001 | BOLT | | 2 | |
| 27 | 577117701 | SCREW | | 4 | |
| 28 | 586654301 | BOLT | | 6 | |
| 29 | 586881101 | BOLT | | 2 | |
| 31 | 532416358 | SCREW | | 9 | |
| 33 | 873900500 | NUT | | 2 | |
| 34 | 539112899 | NUT, 5/16–18, NYLOC | | 6 | |
| 35 | 521996501 | NUT | | 1 | |
| 36 | 539119124 | NUT | | 1 | |
| 37 | 585938101 | NUT | | 1 | |
| 38 | 819111116 | WASHER | | 1 | |
| 39 | 532423063 | WASHER | | 1 | |

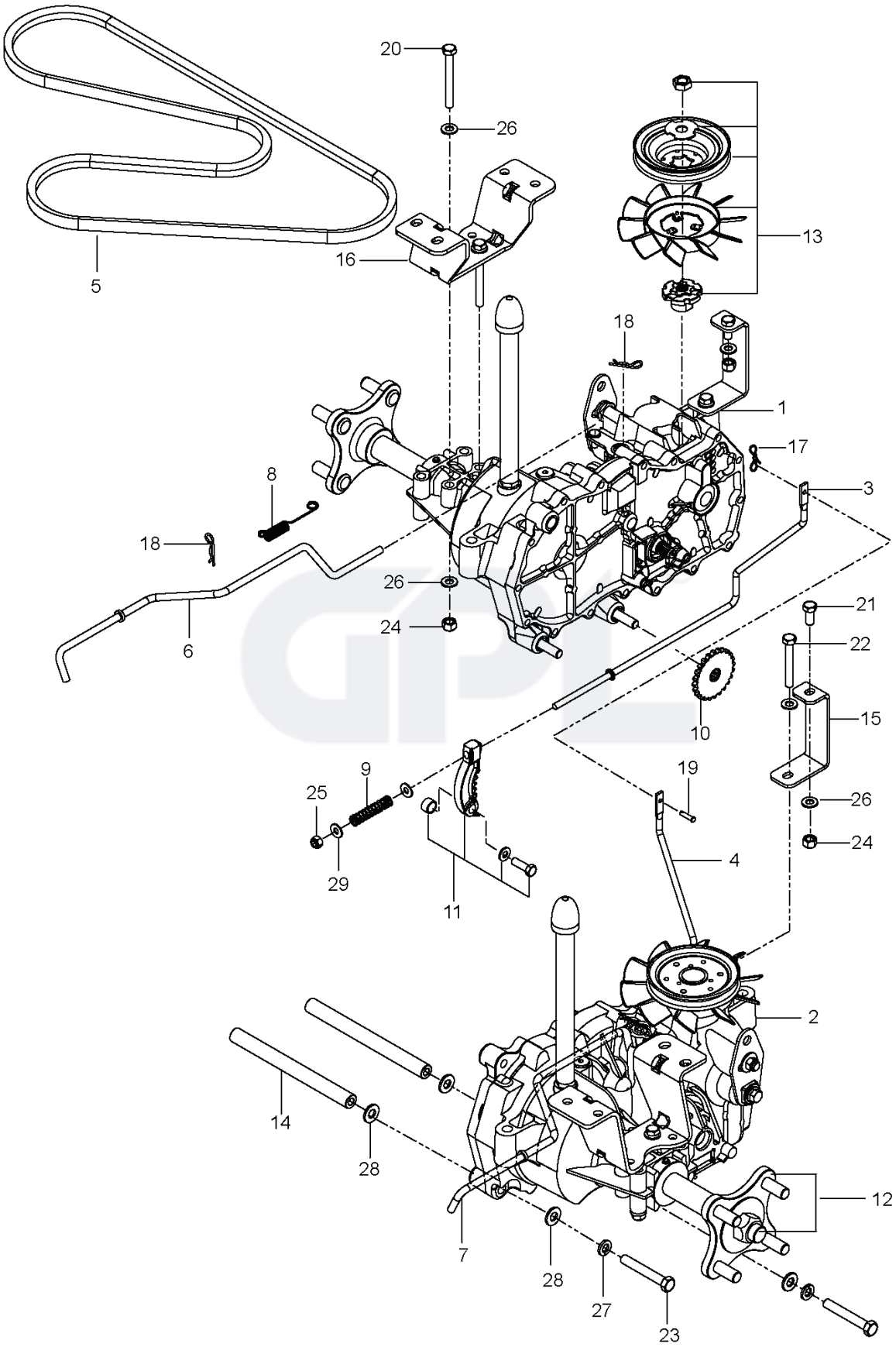
20
26
13
16
5
18
1
17
8
3
18
26
24
6
21
22
10
15
9
19
25
26
24
29
4
11
2
14
28
12
7
28
27
23

| REF. | PART NO. | DESCRIPTION | REMARK | QTY. | KIT |
|---|---|---|---|---|---|
| 1 | 510375601 | TRANSMISSION | | 1 | |
| 2 | 510375602 | TRANSMISSION | | 1 | |
| 3 | 574030501 | LINKAGE | | 1 | |
| 4 | 574030502 | LINKAGE | | 1 | |
| 5 | 539110411 | BELT | | 1 | |
| 6 | 585474401 | ROD | | 1 | |
| 7 | 585474501 | ROD | | 1 | |
| 8 | 586665101 | SPRING | | 2 | |
| 9 | 539110342 | SPRING | | 2 | |
| 10 | 539120080 | DISC | | 2 | |
| 11 | 539120079 | ARM | | 2 | |
| 12 | 575507001 | KIT | | 1 | |
| 13 | 501403602 | TRANSMISSION KIT | | 2 | |
| 14 | 510184104 | SPACING TUBE | | 2 | |
| 15 | 580806502 | SUPPORT | | 2 | |
| 16 | 580806602 | BRACKET | | 2 | |
| 17 | 587225301 | PIN | | 1 | |
| 18 | 539976988 | PIN | | 4 | |
| 19 | 587115301 | PEN | | 1 | |
| 20 | 874780544 | BOLT | | 4 | |
| 21 | 539976934 | SCREW | | 2 | |
| 22 | 874780536 | BOLT | | 2 | |
| 23 | 539990637 | SCREW | | 4 | |
| 24 | 873800500 | LOCK NUT | | 8 | |
| 25 | 539976978 | NUT | | 2 | |
| 26 | 819111116 | WASHER | | 16 | |
| 27 | 810030600 | WASHER | | 4 | |
| 28 | 819131316 | WASHER | | 8 | |
| 29 | 819091016 | WASHER | | 4 | |

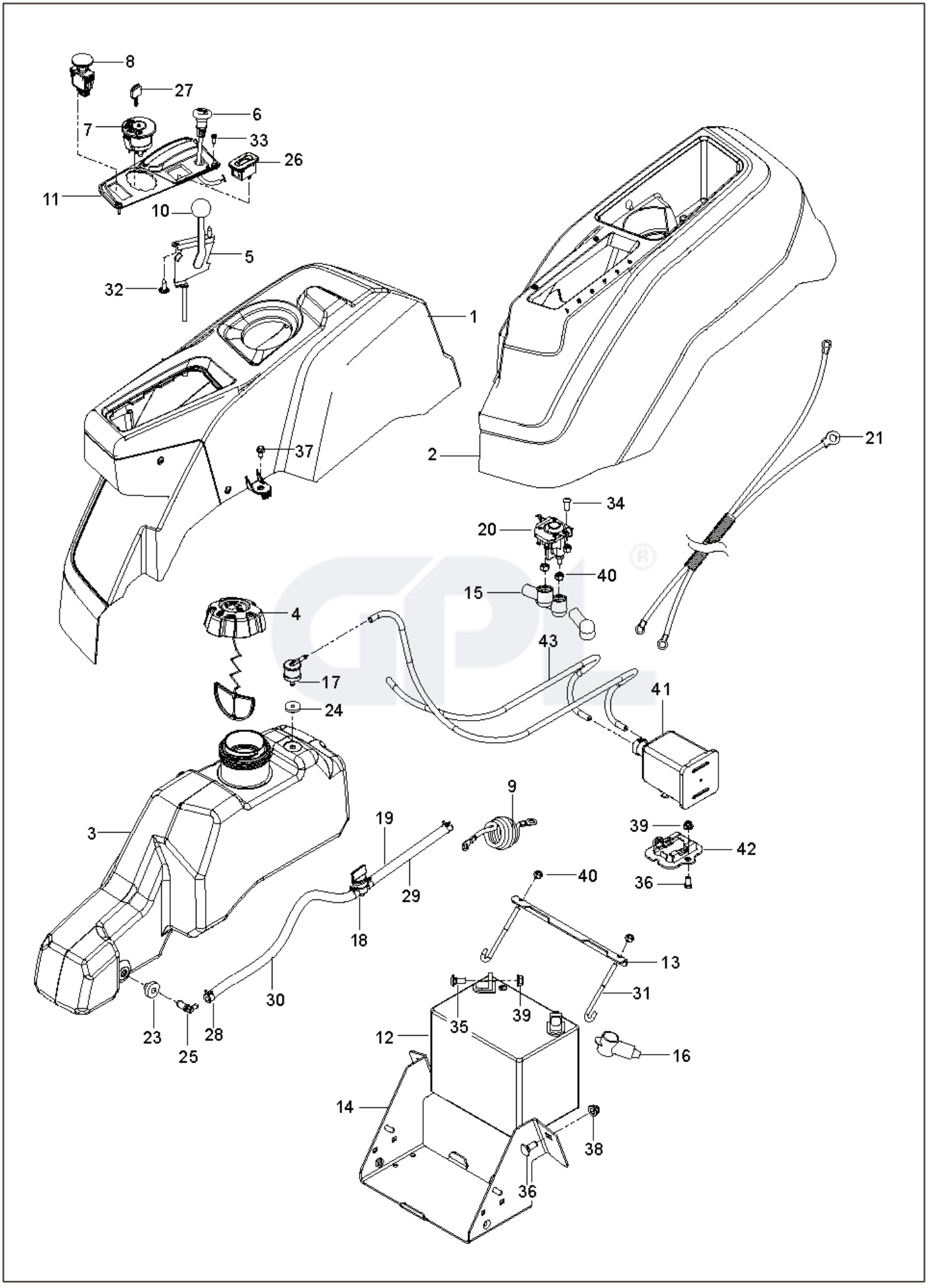
8
27
6
7
33
26
11
10
5
32
1
37
2
21
34
20
40
15
4
43
17
41
24
9
3
19
39
42
29
40
36
18
13
30
31
35
39
23
28
12
16
25
14
38
36

| REF. | PART NO. | DESCRIPTION | REMARK | QTY. | KIT |
|---|---|---|---|---|---|
| 1 | 585522801 | CONSOLE ASSY | | 1 | |
| 2 | 586621201 | CONSOLE ASSY | | 1 | |
| 3 | 589924702 | FUEL TANK ASSY | Fits 2.75" filler neck | 1 | |
| 4 | 599502201 | FUEL CAP ASSY | Fits 2.75" filler neck | 1 | |
| 4 | 529989703 | CAP | Fits 2.00" filler neck | 1 | |
| 5 | 539112438 | THROTTLE CABLE | | 1 | |
| 6 | 586881501 | CHOKE CONTROL ASSY | | 1 | |
| 7 | 539107541 | IGNITION SWITCH | | 1 | |
| 8 | 582107602 | SWITCH | | 1 | |
| 9 | 586108201 | HARNESS | | 2 | |
| 10 | 539133049 | KNOB ROUND BALL | | 1 | |
| 11 | 585522701 | CONTROL PANEL | | 1 | |
| 12 | 539102463 | BATTERY | | 1 | |
| 13 | 510030003 | BRACKET | | 1 | |
| 14 | 582609602 | BOX | | 1 | |
| 15 | 532131563 | COVER | | 3 | |
| 16 | 539102759 | INSULATOR | | 1 | |
| 17 | 576618101 | TANK VENT | | 1 | |
| 18 | 539916325 | VALVE | | 1 | |
| 19 | 586123904 | FUEL HOSE | | 1 | |
| 21 | 587198601 | HARNESS | | 1 | |
| 20 | 582042801 | SOLENOID | | 1 | |
| 23 | 532003645 | BUSHING | | 1 | |
| 24 | 532437492 | GROMMET | | 1 | |
| 25 | 532139277 | NIPPLE | | 1 | |
| 26 | 586161801 | HOUR METER | | 1 | |
| 27 | 532411933 | KEY | | 1 | |
| 28 | 532123487 | HOSE CLAMP | | 2 | |
| 29 | 587044810 | HOSE | | 2 | |
| 30 | 587044818 | HOSE | | 1 | |
| 31 | 588839401 | HOOK | | 2 | |
| 32 | 532141841 | SCREW | | 2 | |
| 33 | 545227101 | SCREW | | 2 | |
| 34 | 539111229 | SCR 1/4-20 X 5/8 BTN SKT HD ZD | | 2 | |
| 35 | 539990316 | BOLT | | 2 | |
| 36 | 539990645 | BOLT | | 2 | |
| 37 | 817490408 | SCREW | | 2 | |
| 38 | 521996501 | NUT | | 5 | |
| 39 | 539112899 | NUT, 5/16-18, NYLOC | | 1 | |
| 40 | 539976978 | NUT | | 1 | |
| 41 | 532414114 | FILTER | | 1 | |
| 42 | 575242701 | BRACKET | | 1 | |
| 43 | 532414119 | PURGE LINE CARB | | 1 | |
| - - | 586337301 | HARNESS | NOT SHOWN | 1 | |
| - - | 505280001 | TIE WRAP | | 1 | |

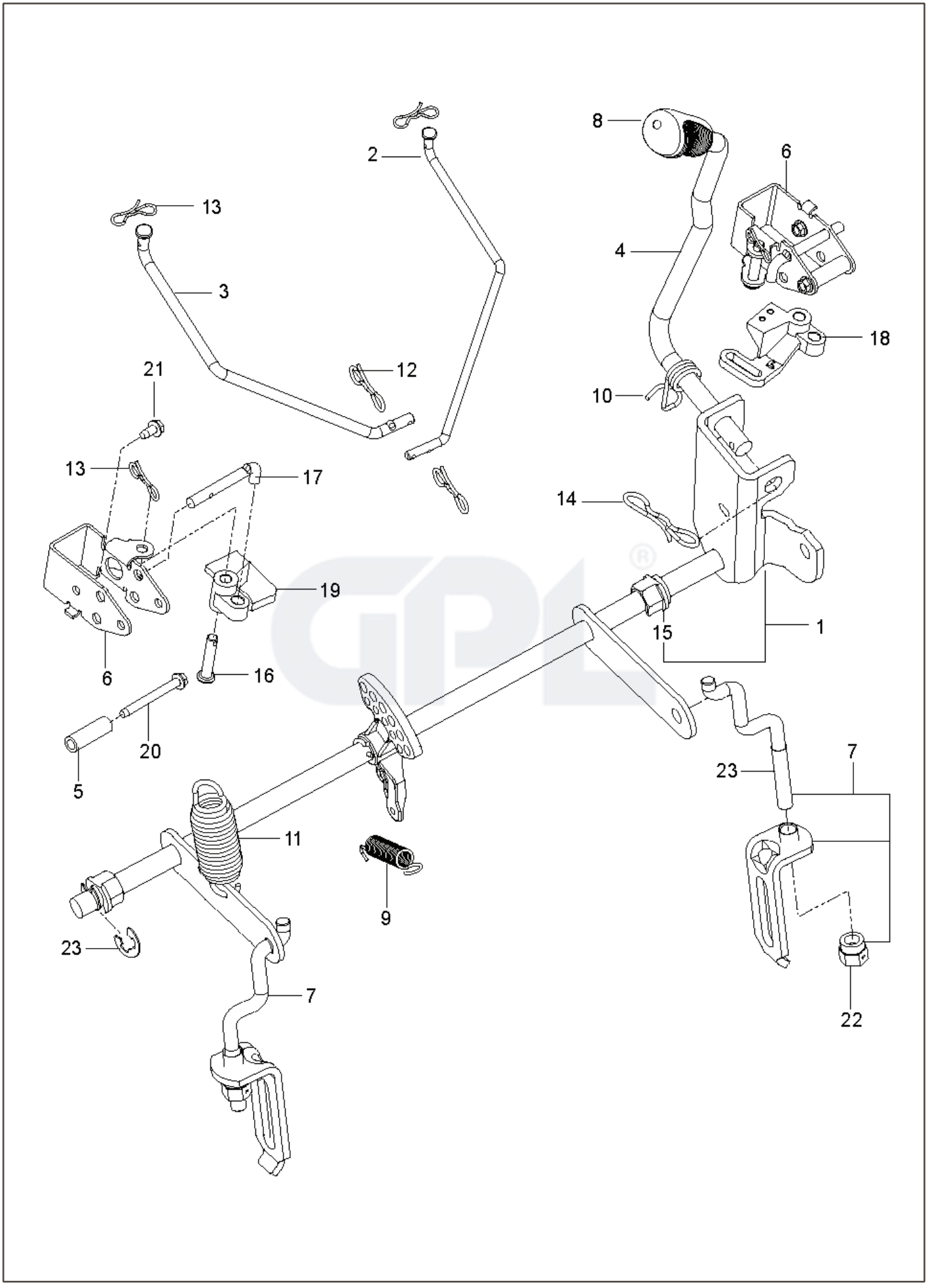
8
6
2
13
4
3
18
12
21
10
13
17
14
19
1
15
6
16
20
5
7
23
11
9
23
7
22

| REF. | PART NO. | DESCRIPTION | REMARK | QTY. | KIT |
|---|---|---|---|---|---|
| 1 | 586429702 | SHAFT ASSY | | 1 | |
| 2 | 586457101 | LINK | | 1 | |
| 3 | 586457201 | LINK | | 2 | |
| 4 | 586428701 | HANDLE | | 1 | 9, 11, 14 |
| 5 | 580486101 | SPACER | | 2 | |
| 6 | 585682102 | BRACKET | | 2 | |
| 7 | 522858601 | ASSEMBLY | | 2 | |
| 8 | 532445060 | LEVER | | 1 | |
| 9 | 586867601 | SPRING | | 1 | |
| 10 | 532196314 | SPRING | | 1 | |
| 11 | 539118762 | SPRING | | 1 | |
| 12 | 587225301 | PIN | | 2 | |
| 13 | 532194209 | SPRING | | 4 | |
| 14 | 532194208 | PIN | | 4 | |
| 15 | 510184901 | BUSHING | | 2 | |
| 16 | 585701401 | PIN | | 2 | |
| 17 | 585682001 | ROD | | 2 | |
| 18 | 586457401 | BELLCRANK | | 1 | |
| 19 | 586457501 | BELLCRANK | | 1 | |
| 20 | 586561301 | SCREW | | 2 | |
| 21 | 532137729 | SCREW | | 2 | |
| 22 | 532175994 | NUT | | 1 | |
| 23 | 812000002 | RETAINER RING | | 1 | |

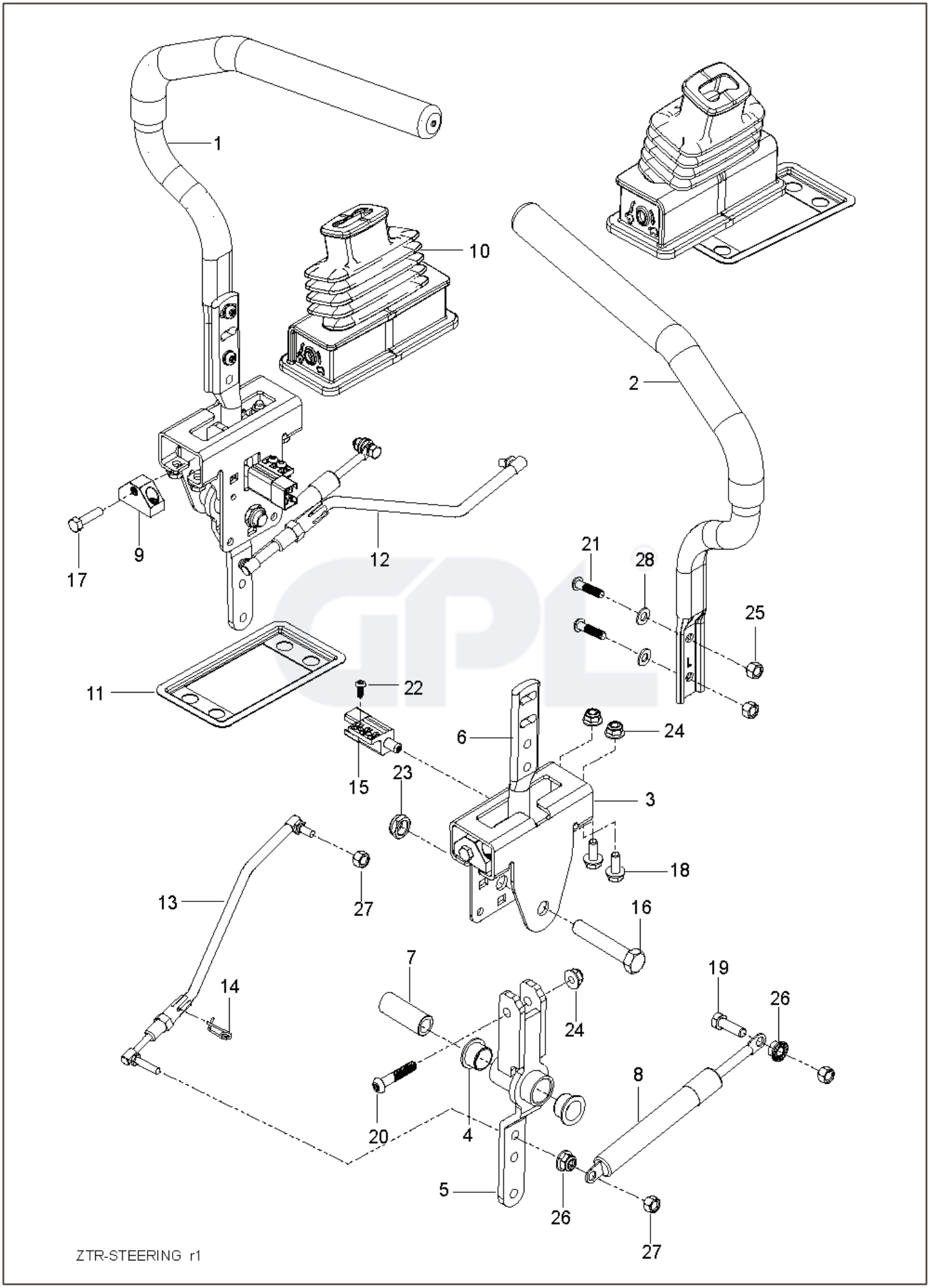
1
10
2
17
9
12
21
28
25
11
22
6
24
15
23
3
18
13
27
16
7
19
26
14
24
20
4
8
5
26
27
ZTR-STEERING r1

| REF. | PART NO. | DESCRIPTION | REMARK | QTY. | KIT |
|---|---|---|---|---|---|
| 1 | 590090803 | TUBE | W/ GRIP | 1 | |
| 2 | 590090804 | TUBE | W/ GRIP | 1 | |
| 3 | 585124705 | BRACKET | | 2 | |
| 4 | 539131518 | BEARING | | 4 | |
| 5 | 576140301 | LEVER | | 2 | |
| 6 | 587601702 | LEVER | | 2 | |
| 7 | 584927201 | SPACER | | 2 | |
| 8 | 539102720 | GAS SPRING | | 2 | |
| 9 | 581437501 | BLOCK | | 2 | |
| 10 | 585831601 | BOOT | | 2 | |
| 11 | 585488202 | FLANGE | | 2 | |
| 12 | 588604901 | ROD | RIGHT | 1 | |
| 13 | 588605001 | ROD | LEFT | 1 | |
| 14 | 532199849 | SPRING RETAINER | | 2 | |
| 15 | 587601501 | SWITCH | | 2 | |
| 16 | 874780844 | BOLT | | 2 | |
| 17 | 585986101 | BOLT | | 2 | |
| 18 | 874490512 | BOLT | | 8 | |
| 19 | 539990209 | SCREW | | 2 | |
| 20 | 576850402 | SCREW | | 2 | |
| 21 | 585985901 | BOLT | | 4 | |
| 22 | 586936001 | SCREW | | 2 | |
| 23 | 539108010 | NUT | | 2 | |
| 24 | 539112899 | NUT, 5/16–18, NYLOC | | 10 | |
| 25 | 585986001 | NUT | | 4 | |
| 26 | 539990585 | NUT | | 4 | |
| 27 | 873800500 | LOCK NUT | | 4 | |
| 28 | 819111116 | WASHER | | 1 | |

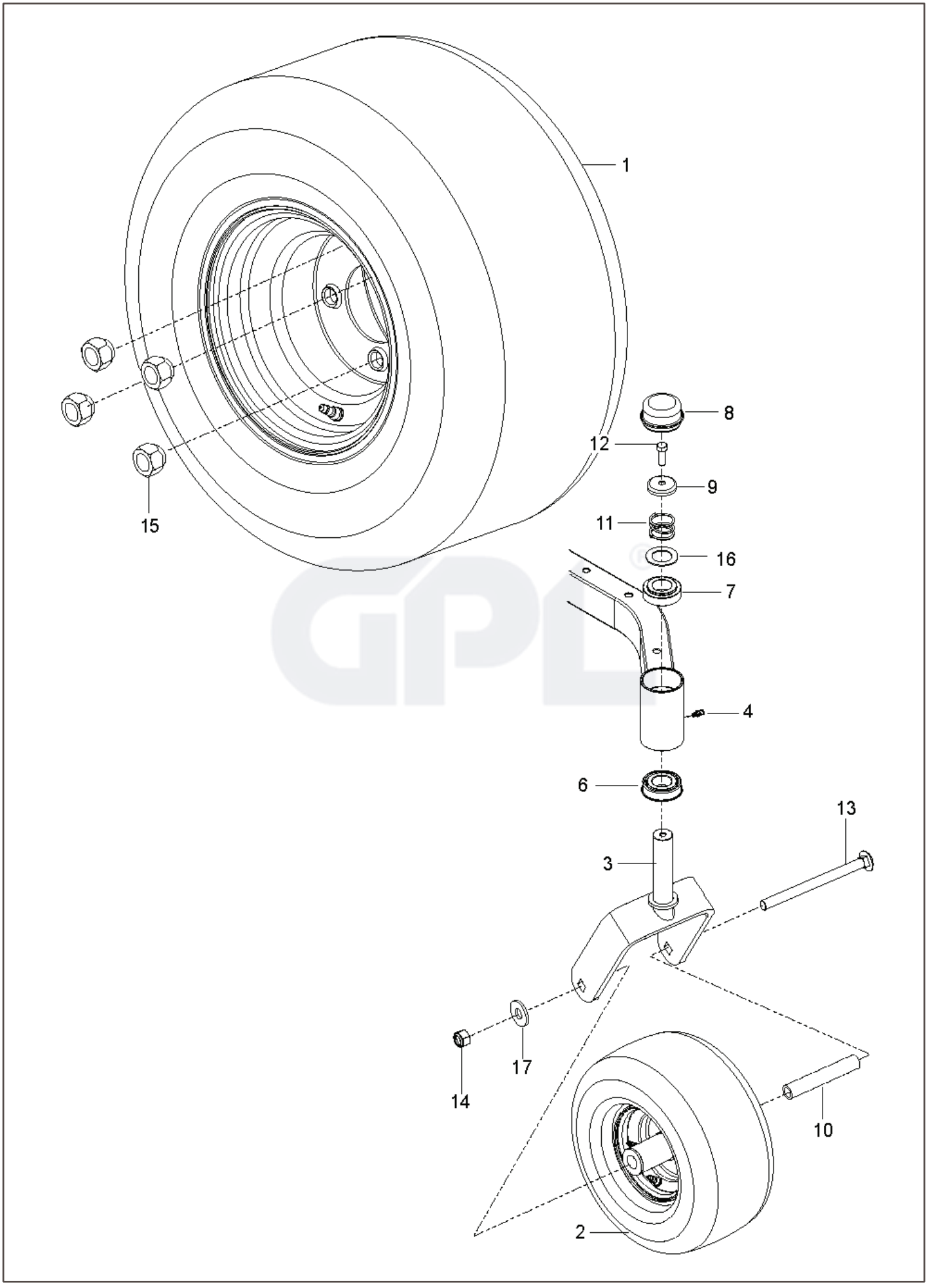
1
15
8
12
9
11
16
7
4
6
13
3
17
14
10
2

| REF. | PART NO. | DESCRIPTION | REMARK | QTY. | KIT |
|---|---|---|---|---|---|
| 1 | 590486601 | WHEEL | | 2 | |
| 2 | 576588602 | WHEEL ASSY | | 2 | |
| 3 | 586650302 | YOKE | | 2 | |
| 4 | 539115638 | FITTING | | 2 | |
| 6 | 539112660 | BEARING | | 2 | |
| 7 | 539117901 | BUSHING | | 2 | |
| 8 | 539102535 | CAP | | 1 | |
| 9 | 539115749 | CASTER PLUG | | 2 | |
| 10 | 585995401 | SPACER | | 1 | |
| 11 | 539115747 | SPRING | | 2 | |
| 12 | 874950516 | SCREW | | 2 | |
| 13 | 576601501 | SCREW | | 2 | |
| 14 | 873930800 | NUT | | 8 | |
| 15 | 539101173 | NUT | | 2 | |
| 16 | 539115675 | WASHER | | 2 | |
| 17 | 819182212 | WASHER | | 1 | |