Z 248F, 970458901-00, 2020-04

SPARE PARTS LIST

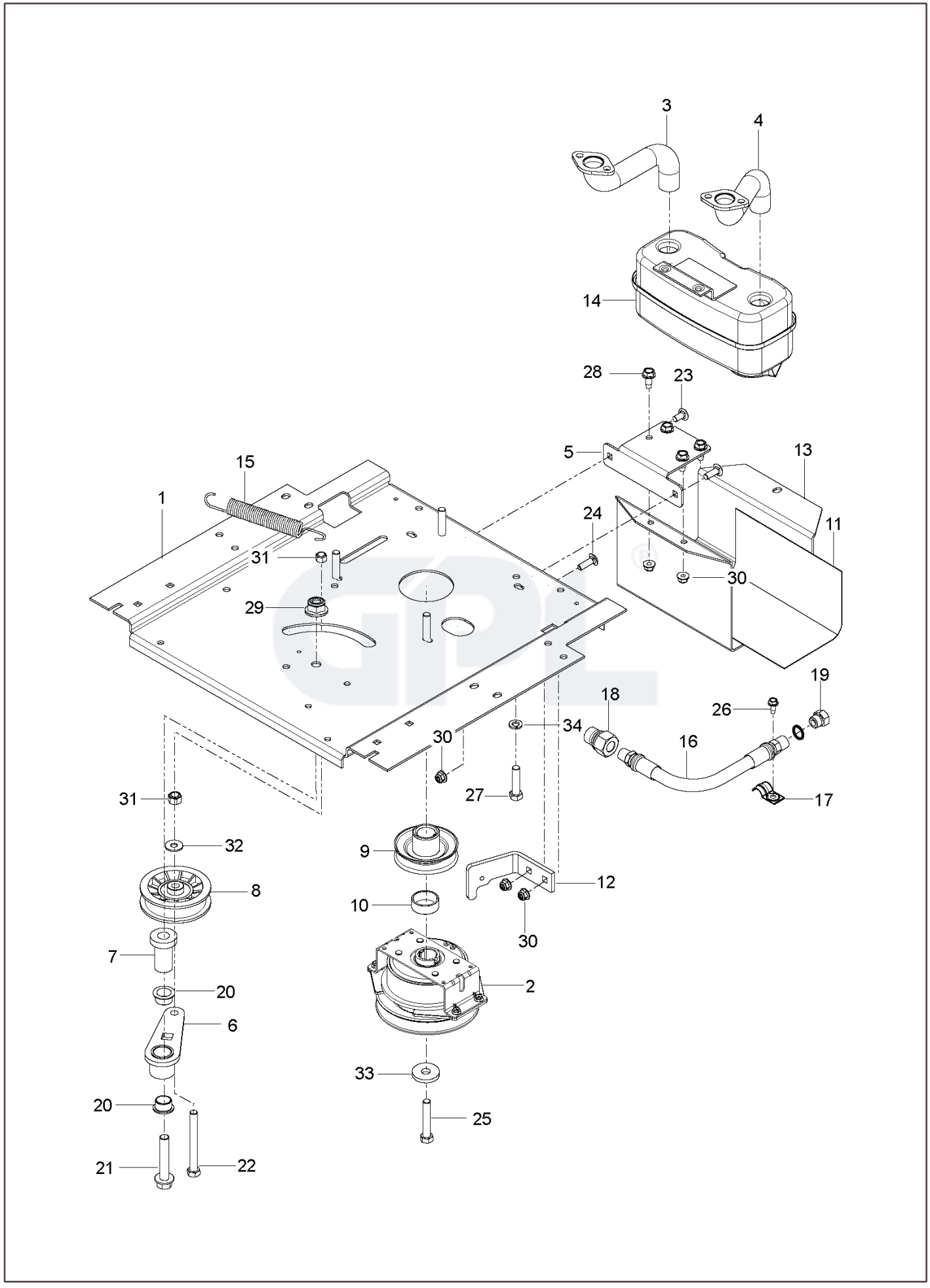
3
4
14
28
23
5
13
15
1
24
11
31
30
29
19
18
26
34
30
16
27
17
31
32
9
12
8
10
30
7
20
2
6
33
20
25
21
22

REF.	PART NO.	DESCRIPTION	REMARK	QTY.	KIT
1	588017102	PLATE		1	
2	587241601	CLUTCH		1	
3	583955701	TUBE		1	
4	583955601	TUBE		1	
5	581886702	BRACKET		1	
6	532448145	ARM		1	
7	582538901	SPINDLE		1	
8	539110311	PULLEY		1	
9	587537401	PULLEY		1	
10	587660101	SPACER		1	
11	539132859	HEAT SHIELD		1	
12	587633302	STOP		1	
13	587451202	GUARD		1	
14	539131604	MUFFLER ASSY		1	
15	532196105	SPRING		1	
16	584825501	HOSE ASSY		1	
17	539101363	CLAMP		1	
18	522599001	ADAPTER		1	
19	585807101	PLUG		1	
20	501603701	BEARING		2	
21	582539501	BOLT		1	
22	874520656	BOLT		1	
23	539990316	BOLT		2	
24	539990208	SCREW		2	
25	581332804	BOLT		1	
26	817490410	SCREW		1	
27	874780620	BOLT		4	
28	817490512	SCREW		4	
29	521991101	NUT		1	
30	539112899	NUT, 5/16–18, NYLOC		5	
31	539976979	NUT		2	
32	539990692	WASHER		1	
33	532126197	WASHER		1	
34	810030600	WASHER		4	
	522598601	PIGTAIL		1	
	589543901	INSTRUCTION		1	
	000000000	W/O DESCRIPTION	Engine, Kawasaki FX691V 23 HP. For engine replacement parts, see a Kawasaki dealer.	1	

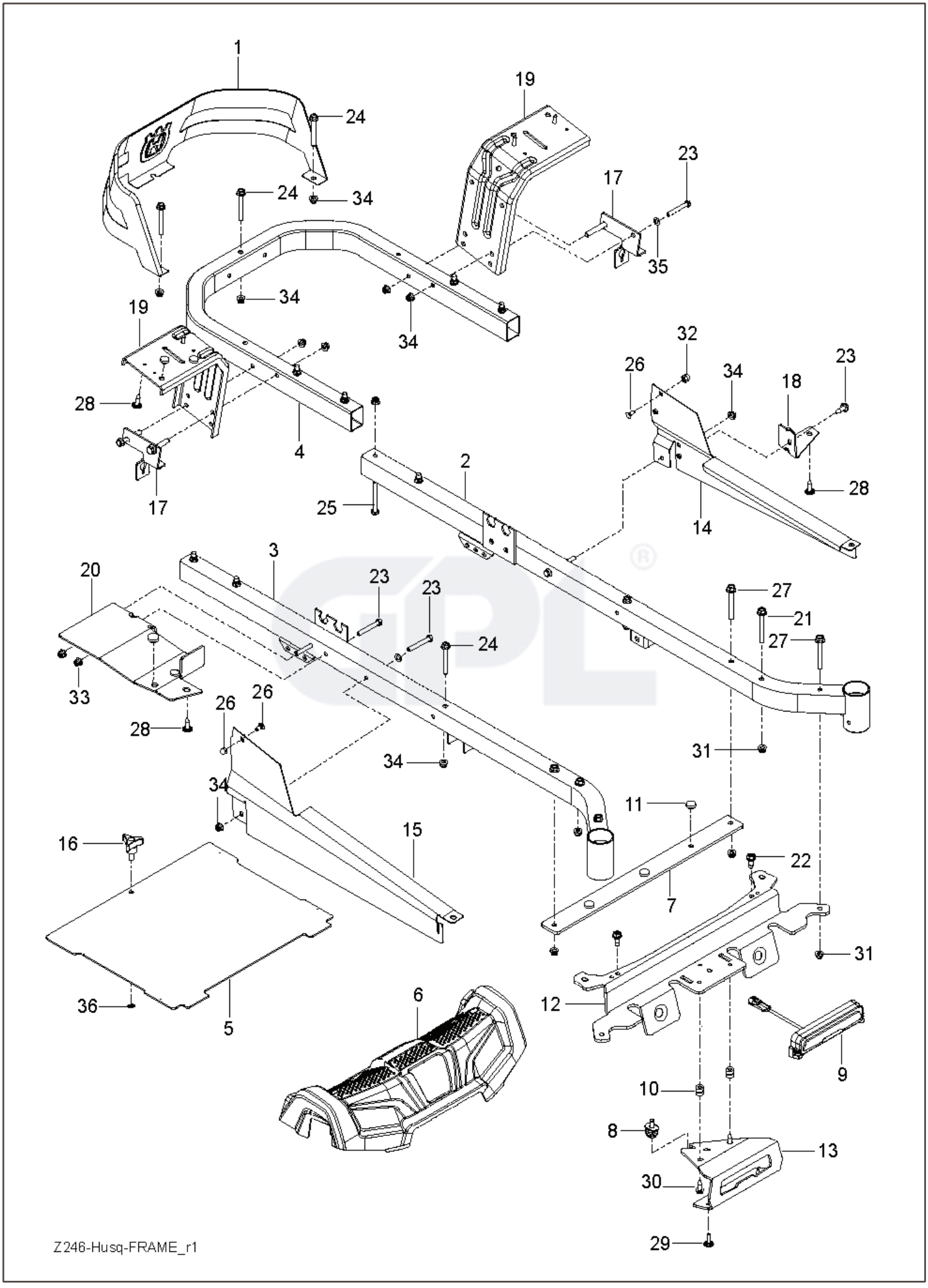
1
19
24
24
34
23
17
35
34
34
19
28
4
17
25
2
32
26
34
18
23
28
14
3
20
23
23
24
27
21
27
33
28
26
26
34
31
34
11
15
16
22
7
31
36
5
6
12
9
10
8
13
30
29
Z246-Husq-FRAME_r1

REF.	PART NO.	DESCRIPTION	REMARK	QTY.	KIT
1	585039802	GUARD		1	
2	589283302	FRAME TUBE		1	
3	589283402	FRAME TUBE		1	
4	584991002	TUBE		1	
5	522842902	PLATE		1	
6	586703801	FRONT COVER		1	
7	585523004	SUPPORT		1	
8	587546901	SCREW		1	
9	585916701	LIGHT		1	
10	587225201	GROMMET		2	
11	585989301	BUMPER		7	
12	585523104	CROSS MEMBER		1	
13	587458602	BRACKET		1	
14	585331602	COVER		1	
15	585331502	COVER		1	
16	539104411	KNOB		1	
17	585474302	BRACKET		2	
18	585523604	SUPPORT		1	
19	580501302	BRACKET		2	
20	585523404	SUPPORT		1	
21	586654301	BOLT		2	
22	586881101	BOLT		2	
23	874780536	BOLT		7	
24	874780544	BOLT		5	
25	874780648	BOLT		8	
26	585940001	BOLT		2	
27	577117701	SCREW		4	
28	532416358	SCREW		6	
29	532421756	SCREW		2	
30	817580520	BOLT		2	
31	521996501	NUT		6	
32	585938101	NUT		2	
33	873900500	NUT		2	
34	539112899	NUT, 5/16–18, NYLOC		9	
35	819111116	WASHER		6	
36	532423063	WASHER		1	

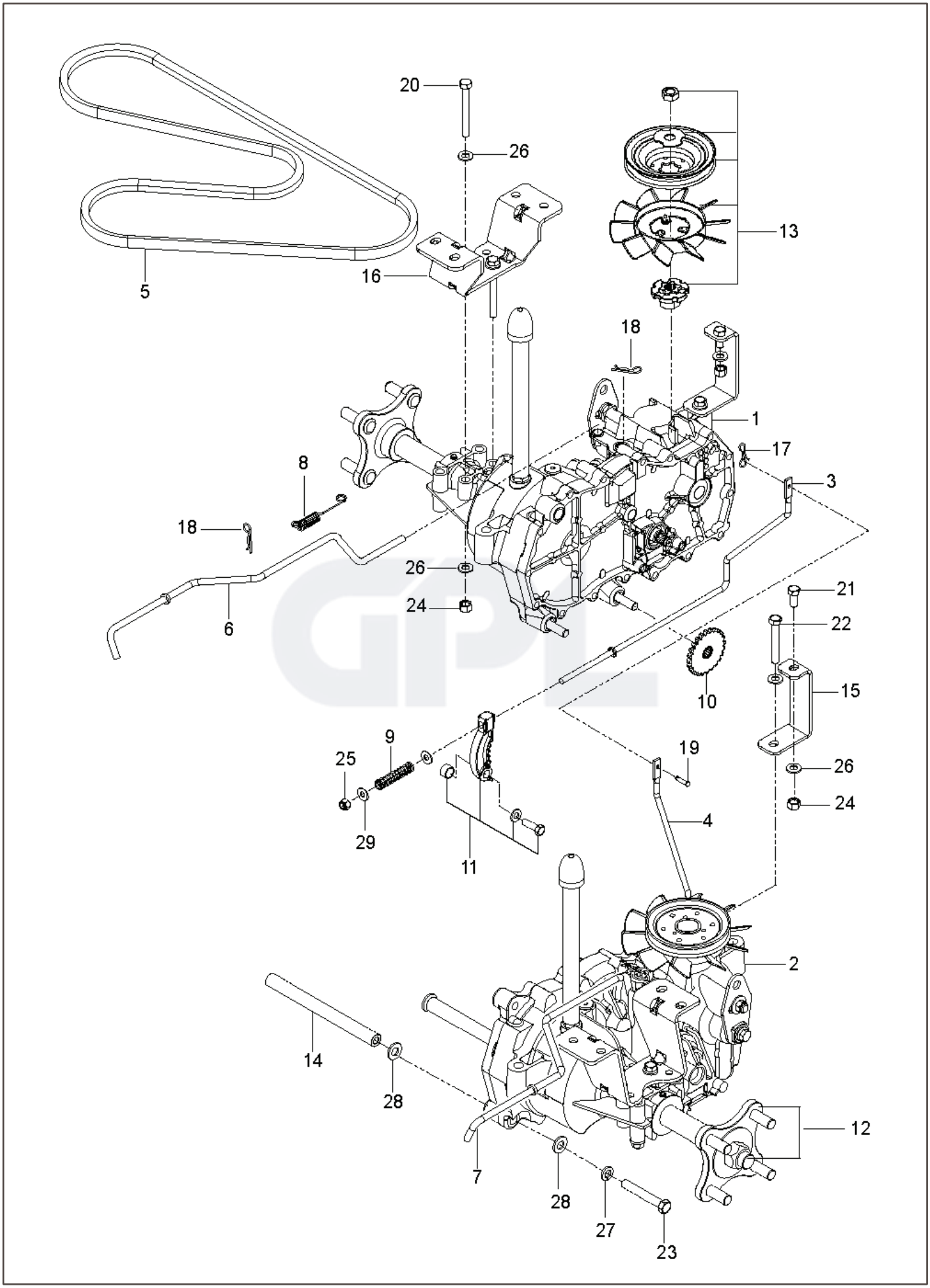
20
26
13
16
5
18
1
17
8
3
18
26
24
6
21
22
10
15
9
19
25
26
24
29
4
11
2
14
28
12
7
28
27
23

REF.	PART NO.	DESCRIPTION	REMARK	QTY.	KIT
1	510375601	TRANSMISSION		1	
2	510375602	TRANSMISSION		1	
3	574030501	LINKAGE		1	
4	574030502	LINKAGE		1	
5	539110411	BELT		1	
6	585474401	ROD		1	
7	585474501	ROD		1	
8	586665101	SPRING		2	
9	539110342	SPRING		2	
10	539120080	DISC		2	
11	539120079	ARM		2	
12	575507001	KIT		1	
13	501403602	TRANSMISSION KIT		2	
14	510184104	SPACING TUBE		2	
15	580806502	SUPPORT		2	
16	580806602	BRACKET		2	
17	587225301	PIN		1	
18	539976988	PIN		4	
19	587115301	PEN		1	
20	874780544	BOLT		4	
21	539976934	SCREW		2	
22	874780536	BOLT		2	
23	539990637	SCREW		4	
24	873800500	LOCK NUT		8	
25	539976978	NUT		2	
26	819111116	WASHER		16	
27	539990118	WASHER		4	
28	819131316	WASHER		8	
29	819091016	WASHER		4	

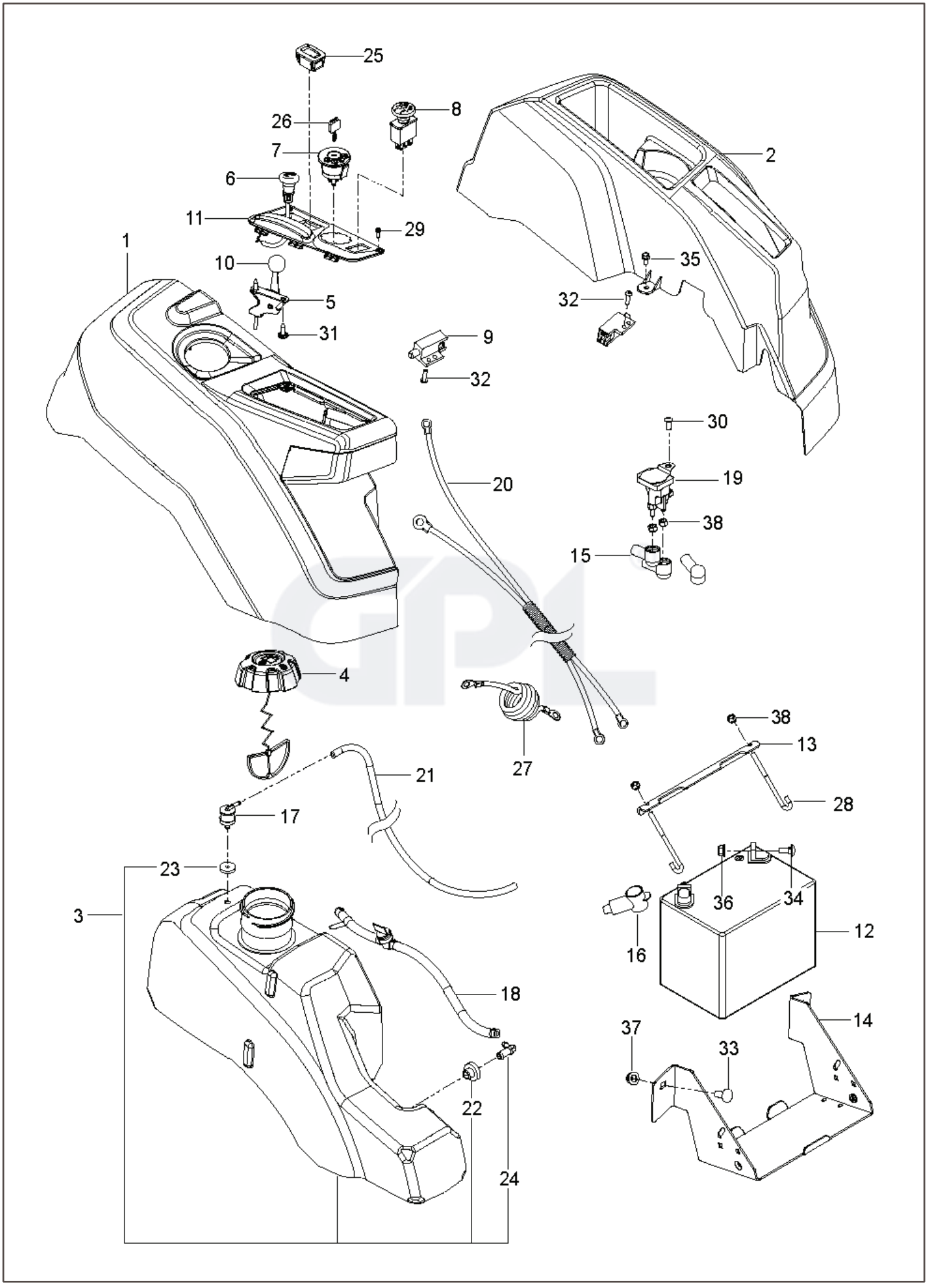
25
26
8
7
6
11
29
1
10
5
31
2
35
32
9
32
30
19
20
38
15
4
27
38
13
21
28
17
23
3
36
34
12
16
18
14
37
33
22
24

REF.	PART NO.	DESCRIPTION	REMARK	QTY.	KIT
1	585522801	CONSOLE ASSY		1	
2	586621201	CONSOLE ASSY		1	
3	589924702	FUEL TANK ASSY	Fits 2.75" filler neck	1	
4	585124801	FUEL CAP ASSY	Fits 2.75" filler neck	1	
4	529989702	CAP	Fits 2.00" filler neck	1	
5	539112438	THROTTLE CABLE		1	
6	586881501	CHOKE CONTROL ASSY		1	
7	539107541	IGNITION SWITCH		1	
8	582107602	SWITCH		1	
9	587601501	SWITCH		2	
10	539133049	KNOB ROUND BALL		1	
11	585522701	CONTROL PANEL		1	
12	539102436	BATTERY		1	
13	510030003	BRACKET		1	
14	582609602	BOX		1	
15	532131563	COVER		3	
16	539102759	INSULATOR		1	
17	576618101	TANK VENT		1	
18	586123906	FUEL HOSE		1	
19	582042801	SOLENOID		1	
20	587198601	HARNESS		1	
21	587044550	HOSE		1	
22	532003645	BUSHING		1	
23	532437492	GROMMET		1	
24	532139277	NIPPLE		1	
25	586161801	HOUR METER		1	
26	532140401	KEY		1	
27	586108201	HARNESS		1	
28	588839401	HOOK		2	
29	545227101	SCREW		2	
30	539111229	SCR 1/4–20 X 5/8 BTN SKT HD ZD		1	
31	532141841	SCREW		2	
32	574822701	SCREW		2	
33	539990645	BOLT		2	
34	872140506	BOLT		2	
35	817490408	SCREW		2	
36	539112899	NUT, 5/16–18, NYLOC		2	
37	521996501	NUT		2	
38	539976978	NUT		5	
	586337301	HARNESS	NOT SHOWN	1	
	532109748	RELAY	NOT SHOWN	1	
	586548101	HARNESS	NOT SHOWN	1	

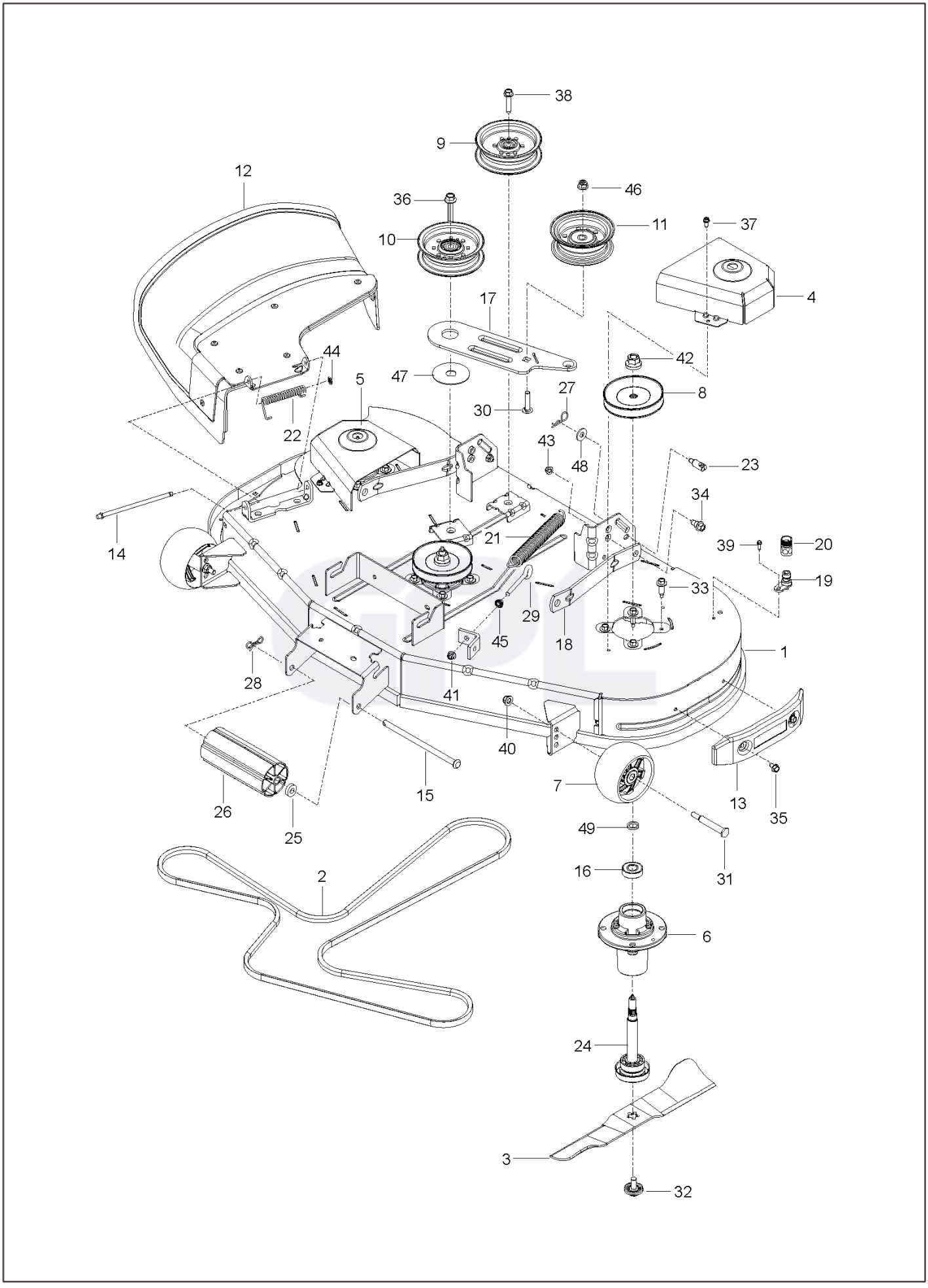
38
9
12
46
36
11
37
10
4
17
42
44
47
8
5
27
30
22
43
48
23
34
14
21
39
20
19
33
29
45
18
1
28
41
40
7
13
35
26
25
15
49
31
16
2
6
24
3
32

REF.	PART NO.	DESCRIPTION	REMARK	QTY.	KIT
1	588781302	DECK SHELL ASSY		1	
2	582558001	BELT		1	
3	588811002	BLADE		2	
4	588812802	COVER		1	
5	588812402	COVER		1	
6	539112170	HOUSING ASSY		3	
7	589527301	WHEEL		2	
8	532173435	PULLEY		3	
9	532196106	PULLEY		1	
10	532196104	PULLEY		1	
11	532193197	PULLEY		1	
12	588980701	DEFLECTOR ASSY		1	
13	582541101	BUMPER		1	
14	532131491	SHAFT		2	
15	532179127	ROD ROLLER NOSE		1	
16	532110485	BEARING		2	
17	588812202	ARM		1	
18	587140502	ARM		2	
19	532415598	HOSE COUPLING		1	
20	532416405	COUPLING		1	
21	582504001	SPRING		1	
22	587354701	SPRING		1	
23	532195161	STUD		2	
24	532187291	SHAFT		3	
25	582360501	BUSHING		1	
26	532176066	ROLLER		1	
27	539976989	SPLIT PIN		2	
28	532194208	PIN		1	
29	539115574	EYE BOLT		1	
30	872110614	BOLT		1	
31	532193406	BOLT		2	
32	532193003	SCREW		2	
33	584953901	BOLT		12	
34	532196539	BOLT		2	
35	532170165	BOLT		2	
36	588438301	SCREW		1	
37	532137729	SCREW		4	
38	817490628	SCREW		1	
39	817490410	SCREW		1	
40	521996501	NUT		2	
41	539112899	NUT, 5/16–18, NYLOC		1	
42	532400234	NUT		3	
43	873900500	NUT		2	
44	532110452	NUT		1	
45	539990585	NUT		1	
46	873680600	NUT		1	
47	532178515	WASHER		1	
48	819212113	WASHER		2	
49	532187690	WASHER		3	

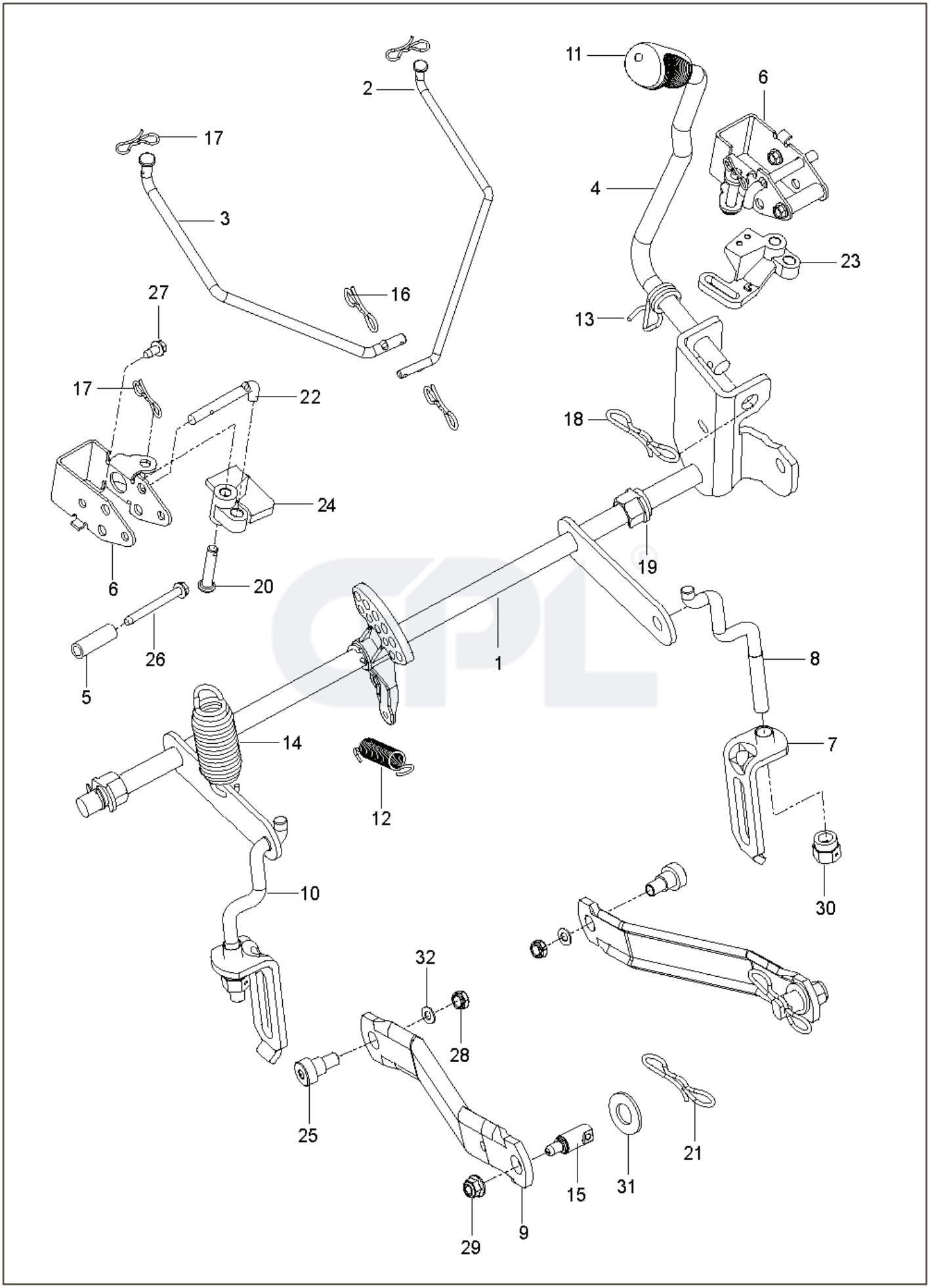
11
6
2
17
4
3
23
27
16
13
17
22
18
24
6
20
19
26
1
8
5
14
12
7
30
10
32
28
25
15
31
21
29
9

REF.	PART NO.	DESCRIPTION	REMARK	QTY.	KIT
1	587623101	SHAFT ASSY		1	15, 23
2	586457101	LINK		1	
3	586457201	LINK		1	
4	587622901	LIFTING LEVER ASSY		1	8, 10, 13
5	580486101	SPACER		2	
6	585682102	BRACKET		2	
7	522858601	ASSEMBLY		2	
8	525847201	LINK		2	
9	587140502	ARM		2	
10	587623001	LINK ASSY		2	
11	532445060	LEVER		2	
12	586867601	SPRING		4	
13	532196314	SPRING		1	
14	539118762	SPRING		2	
15	532195161	STUD		2	
16	532194208	PIN		2	
17	587225301	PIN		4	
18	532194209	SPRING		1	
19	510184901	BUSHING		2	
20	585701401	PIN		2	
21	532194209	SPRING		2	
22	585682001	ROD		2	
23	586457401	BELLCRANK		1	
24	586457501	BELLCRANK		1	
25	539113621	SB 3/8–16 X 3/8 SKT HD ZD		2	
26	586561301	SCREW		2	
27	532137729	SCREW		2	
28	539200282	NUT		2	
29	539112899	NUT, 5/16–18, NYLOC		2	
30	532175994	NUT		2	
31	819212113	WASHER		2	
32	819131316	WASHER		2	

*OPTIONAL

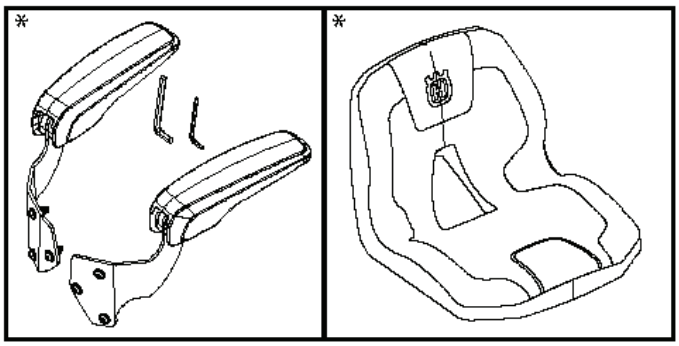

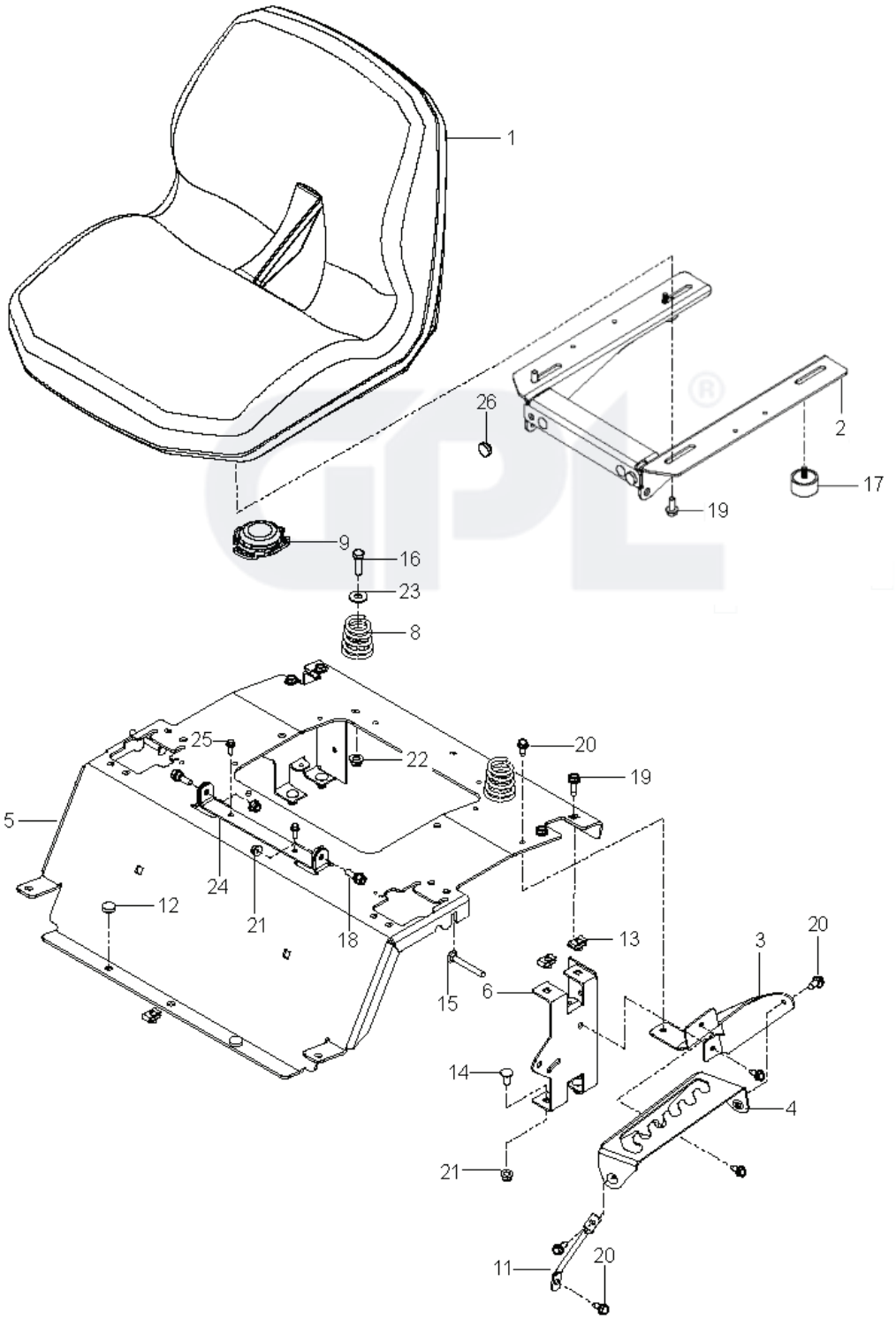

REF.	PART NO.	DESCRIPTION	REMARK	QTY.	KIT
1	597658101	SEAT		1	9
2	596992703	BRACKET		1	
3	586220802	SUPPORT PLATE		1	
4	586221202	PLATE		1	
5	589481206	PLATE		1	
6	580308202	SUPPORT		2	
8	589483501	SPRING		2	
9	532192749	SWITCH.SEAT.DP W/RAMPS		1	
11	586428601	SUPPORT LEG		1	
12	585989301	BUMPER		2	
13	539104763	CLIP		5	
14	539990316	BOLT		4	
15	510422701	SCREW		2	
16	874780620	BOLT		2	
17	582478702	BUMPER		1	
18	539110303	BOLT		2	
19	874490512	BOLT		4	
20	817000510	BOLT		6	
21	539112899	NUT, 5/16–18, NYLOC		4	
22	873900400	NUT		2	
23	819141614	WASHER		1	
24	590899903	BRACKET		2	
25	589028501	SCREW		1	
26	539102587	ABSORBER		1	
	597658203	SERVICE KIT		1	
	597959401	COVER		1	

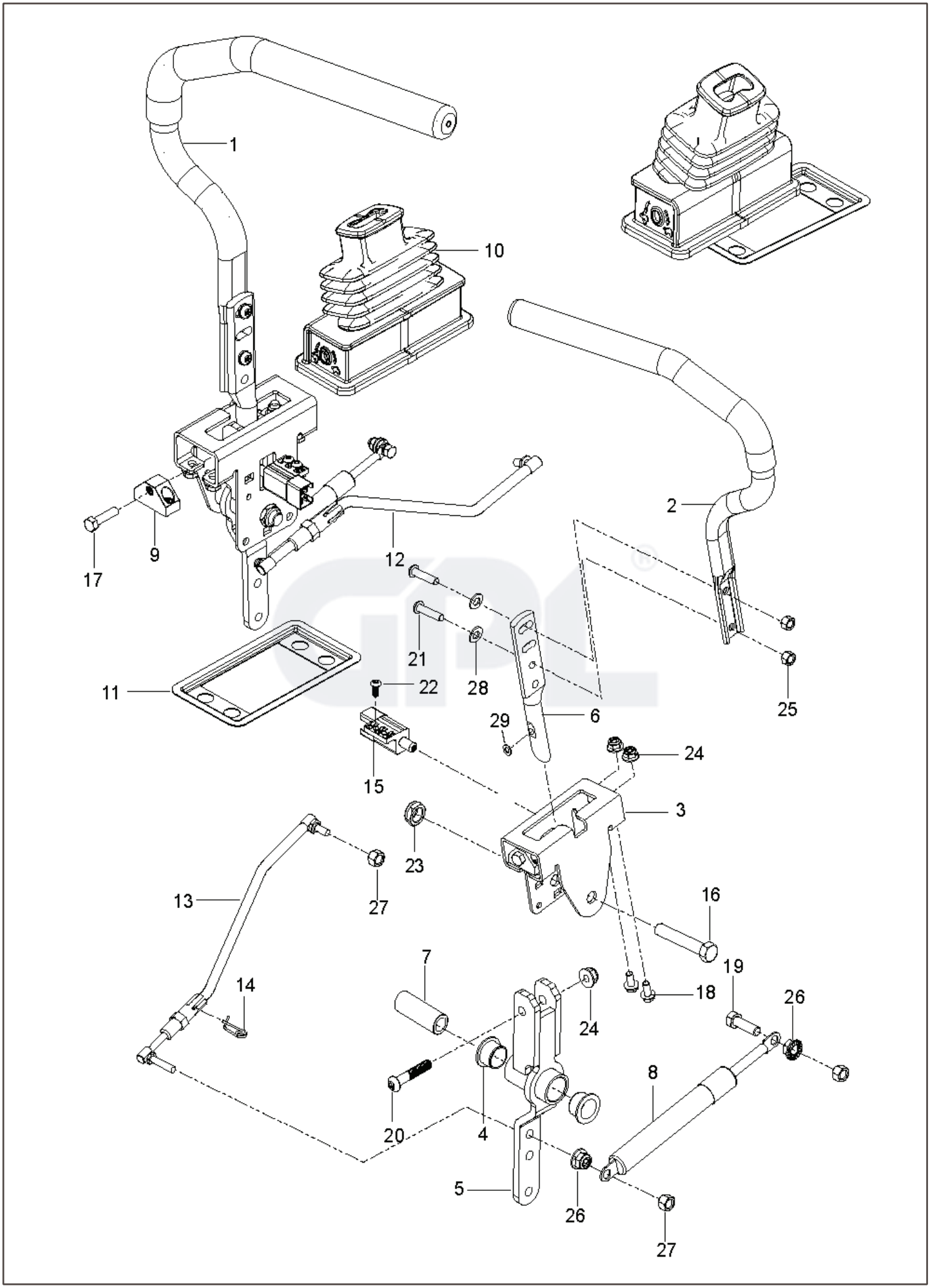
1
10
2
17
9
12
21
28
25
11
22
6
29
24
15
3
23
13
27
16
7
19
14
18
26
24
8
20
4
5
26
27

REF.	PART NO.	DESCRIPTION	REMARK	QTY.	KIT
1	582313803	TUBE	W/ GRIP	2	
1	598851703	TUBE	fits 970458601-00	1	
2	582313804	TUBE	W/ GRIP	1	
2	598851704	TUBE	fits 970458601-00	1	
3	585124705	BRACKET		2	
4	539131518	BEARING		4	
5	576140301	LEVER		2	
6	587601704	LEVER		2	
7	584927201	SPACER		2	
8	539102720	GAS SPRING		2	
9	581437502	BLOCK		2	
10	585831601	BOOT		2	
11	585488202	FLANGE		2	
12	588604902	ROD		2	
13	588605002	ROD		2	
14	532199849	SPRING RETAINER		2	
15	587601501	SWITCH		2	
16	596434301	BOLT		2	
17	585986101	BOLT		2	
18	592858702	BOLT		8	
19	596580801	BOLT		2	
20	587885301	SCREW		2	
21	585985901	BOLT		4	
22	574822701	SCREW		2	
23	539108010	NUT		2	
24	594944401	NUT		10	
25	596583702	NUT		4	
26	596039201	LOCK NUT		4	
27	596583702	NUT		4	
28	596204101	WASHER		4	
29	587614201	WASHER		2	
	598851704	TUBE	fits 970458601-00	1	

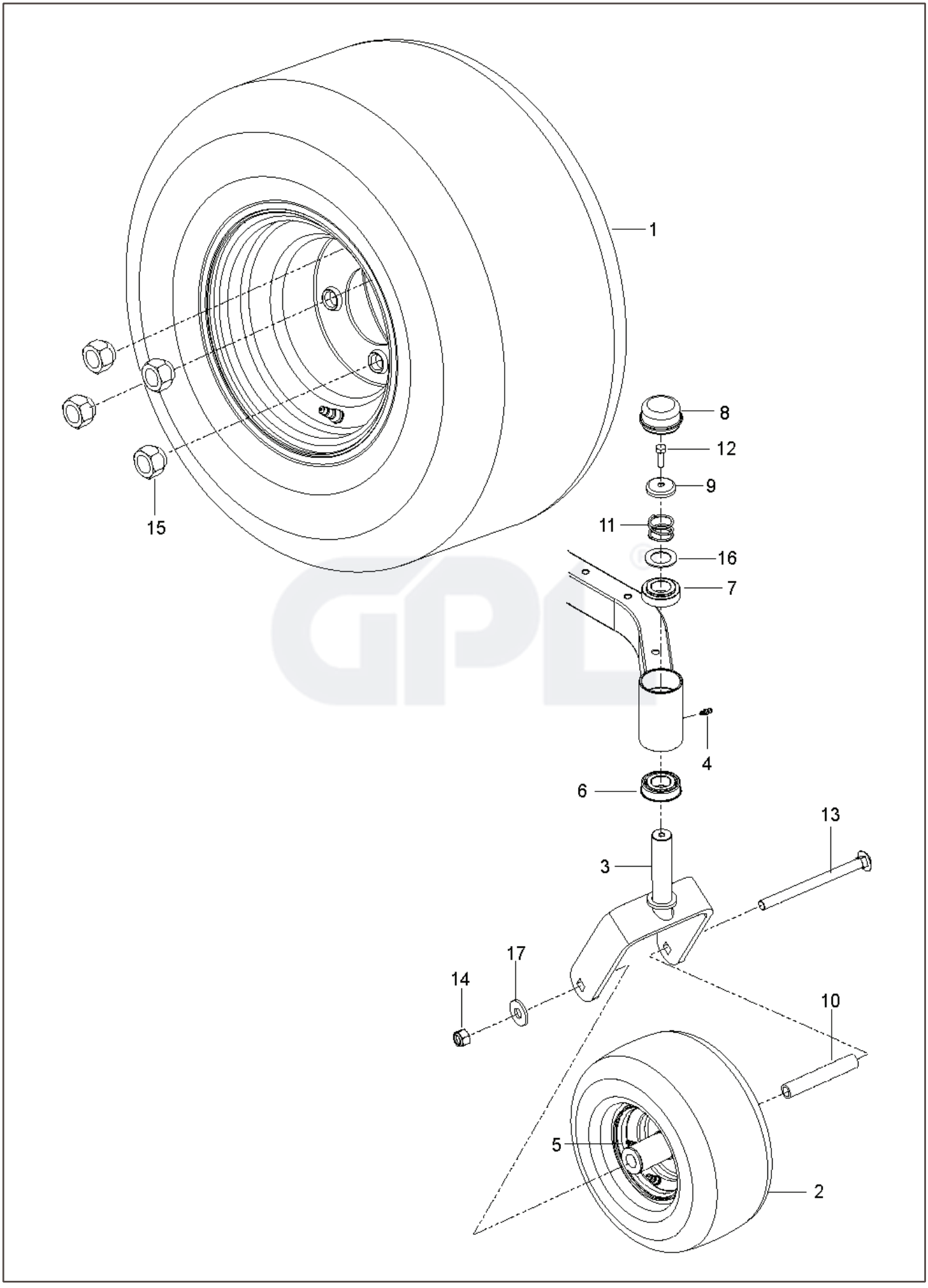
1
15
8
12
9
11
16
7
4
6
13
3
17
14
10
5
2

REF.	PART NO.	DESCRIPTION	REMARK	QTY.	KIT
1	579753401	WHEEL ASSY		2	
2	576588602	WHEEL ASSY		2	
3	586650302	YOKE		2	
4	539115638	FITTING		2	
5	539103300	NIPPLE		2	
6	539112660	BEARING		2	
7	539117901	BUSHING		2	
8	539102535	CAP		2	
9	539115749	CASTER PLUG		2	
10	585995401	SPACER		2	
11	539115747	SPRING		2	
12	874950516	SCREW		2	
13	576601501	SCREW		2	
14	873930800	NUT		2	
15	587653902	NUT		8	
16	539115675	WASHER		2	
17	819182212	WASHER		2	

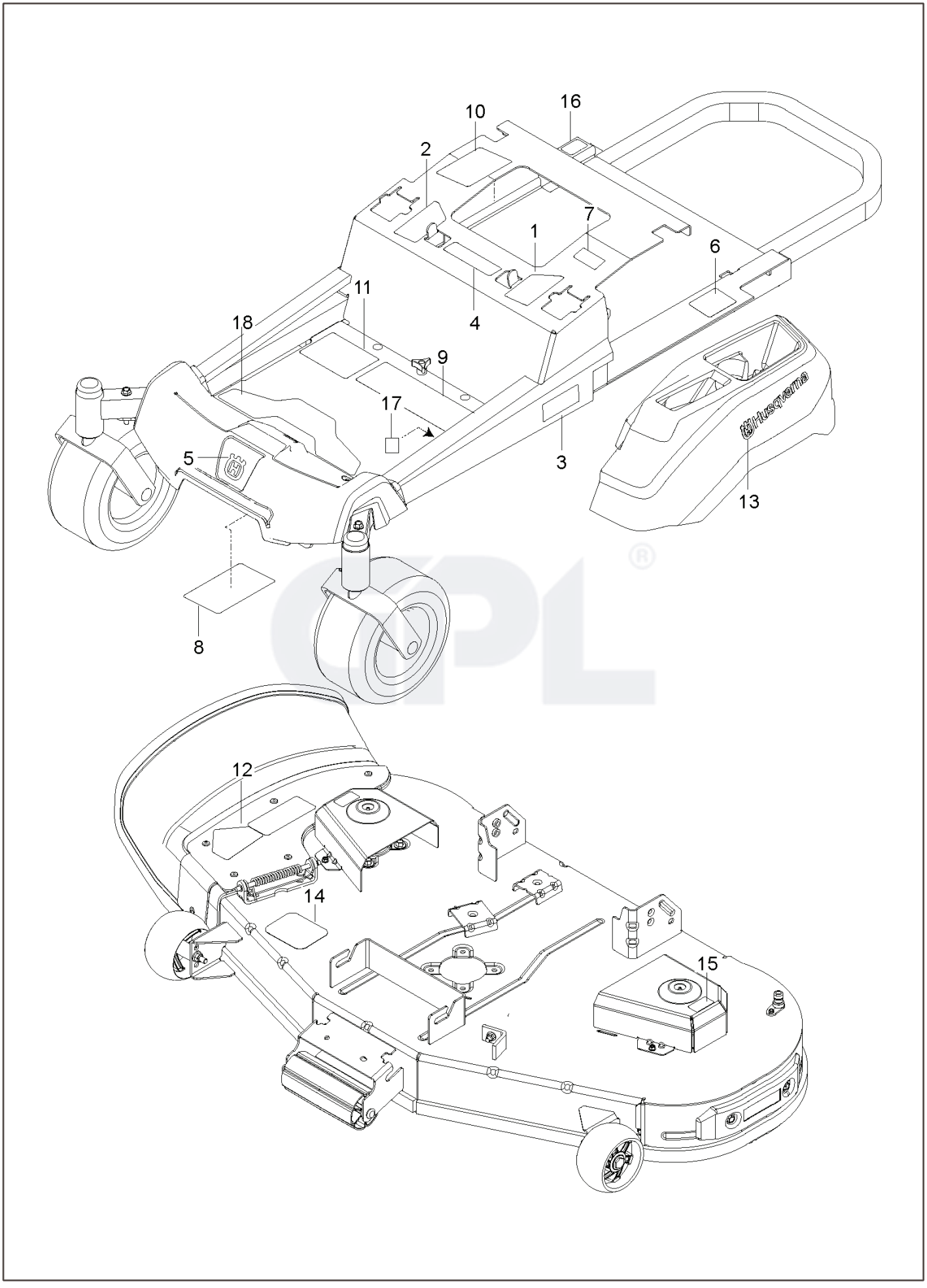
16
10
2
7
1
6
11
4
18
9
17
5
3
13
8
12
14
15

REF.	PART NO.	DESCRIPTION	REMARK	QTY.	KIT
1	587595601	DECAL		1	
2	587595501	DECAL		1	
3	587220301	DECAL		2	
4	539105745	DECAL		1	
5	532428677	DECAL		1	
6	539108385	DECAL		1	
7	539108386	DECAL		1	
8	539109897	DECAL		1	
9	583934001	DECAL		1	
10	532423829	DECAL		1	
11	588035101	DECAL		1	
12	586978801	DECAL		1	
13	577469001	DECAL		2	
14	510240201	DECAL		1	
15	589357901	DECAL		1	
16	501082601	DECAL		1	
17	581724102	DECAL		1	
18	587000701	PAD		1	