Husqvarna®

Husqvarna®

www.husqvarna.com

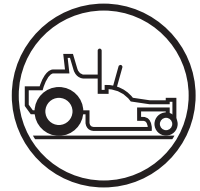

Parts Manual

Z 254F / 96795400300

Please read the operator manual carefully and make sure you understand the instructions before using the machine.

Gasoline containing a maximum of 10% ethanol (E10) is permitted for use in this machine. The use of gasoline with more than 10% ethanol (E10) will void the product warranty.

2019-03-26 JSE

114 09 12-27 Rev. 1



When you need spare parts or support in service questions, warranty issues, etc., please consult the following professional:

This manual belongs to the machine with the manufacturing number:	Engine	Transmission

Manufacturing Number

The machine's manufacturing number can be found on the printed plate affixed to the engine compartment.

Stated on the plate, from the top are:

- The machine's type designation (I.D.).
- The manufacturer's type number (Model).
- The machine's serial number (Serial no.)

Please have the type designation and serial number available when ordering spare parts.

Ref.	Part No.	Qty	Description	Kit / Assy Includes
1	587 59 56-01	1	Decal, Steer / Brake Left	
2	587 59 55-01	1	Decal, Steer / Brake Right	
3	592 86 99-01	2	Decal, Z 254F	
4	539 10 57-45	1	Decal, Battery Warning	
5	593 80 88-01	1	Decal, 54 Deck Cleacut	
6	539 10 83-85	1	Decal, Do Not Tow	
7	539 10 83-86	1	Decal, Exit Mower	
8	539 10 98-97	1	Decal, Service	
9	590 48 55-01	1	Decal, Safety Warnings	
10	532 42 38-29	1	Decal, Responsibility	
11	588 03 51-01	1	Decal, Start	
12	586 97 88-01	1	Decal, Deflector	
13	589 35 79-01	1	Decal, No Step	
14	591 16 39-01	1	Decal, Belt Routing	
15	577 46 90-01	2	Decal, Husqvarna	
16	591 35 73-01	1	Decal, Logo	
17	587 00 07-01	1	Pad, Abrasive	
18	592 89 83-01	1	Decal, Deck Clearcut	

©2019 All rights reserved.
Orangeburg SC. Printed in U.S.A.

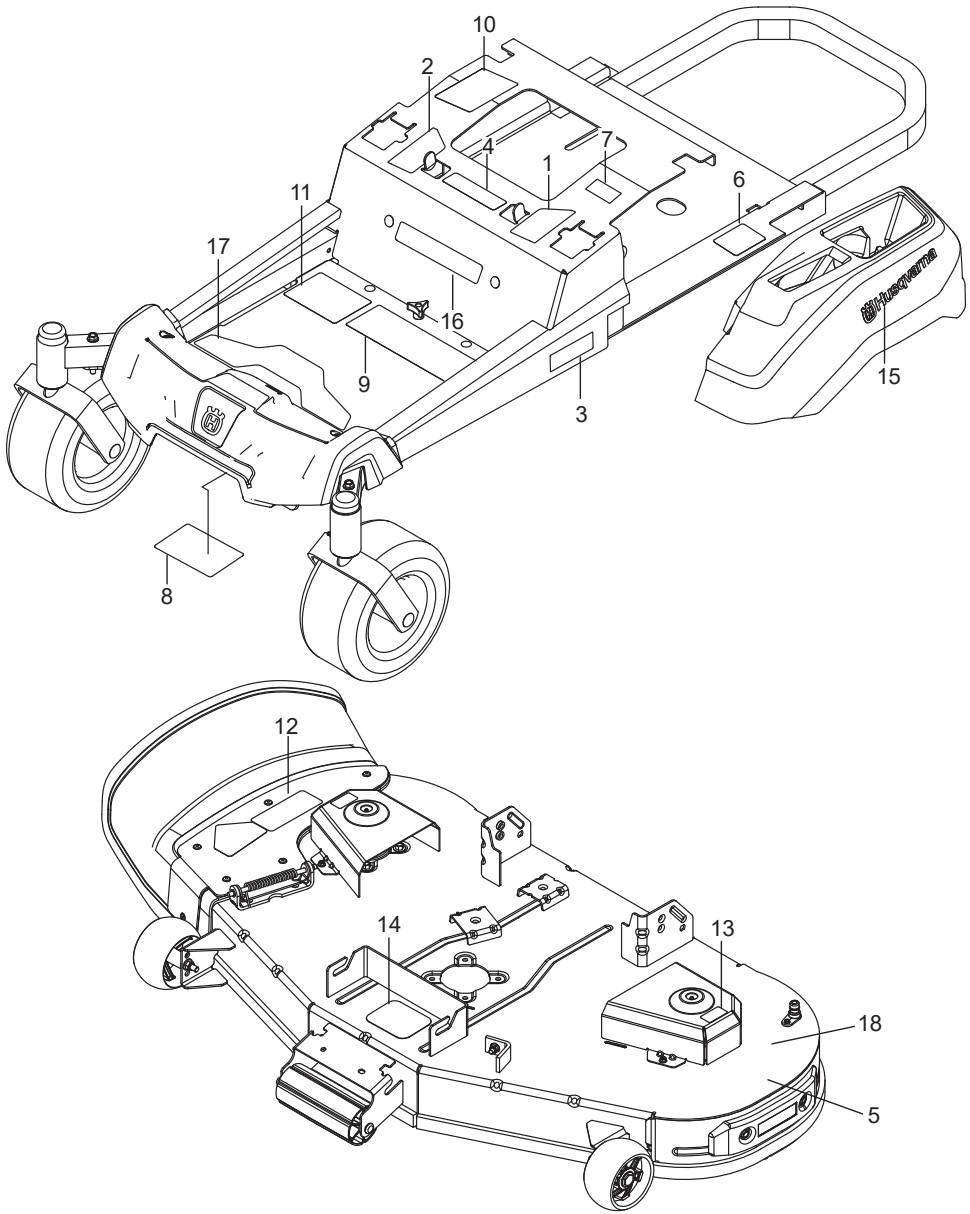

CONTENTS

FRAME 4
ENGINE MOUNTING, GUARDS & MUFFLER 6
STEERING 8
IGNITION SYSTEM 10
BRAKE / LIFT 12
HYDRAULIC PUMP-MOTOR 14
WHEELS & TIRES 16
MOWER DECK / CUTTING DECK 18
SEAT 20
DECALS 22

Illustrations may or may not represent the actual assemblies and it is not recommended to use this manual as a guide to assemble or disassemble the mower.

NOTE: All fasteners are Grade 5 unless otherwise specified.

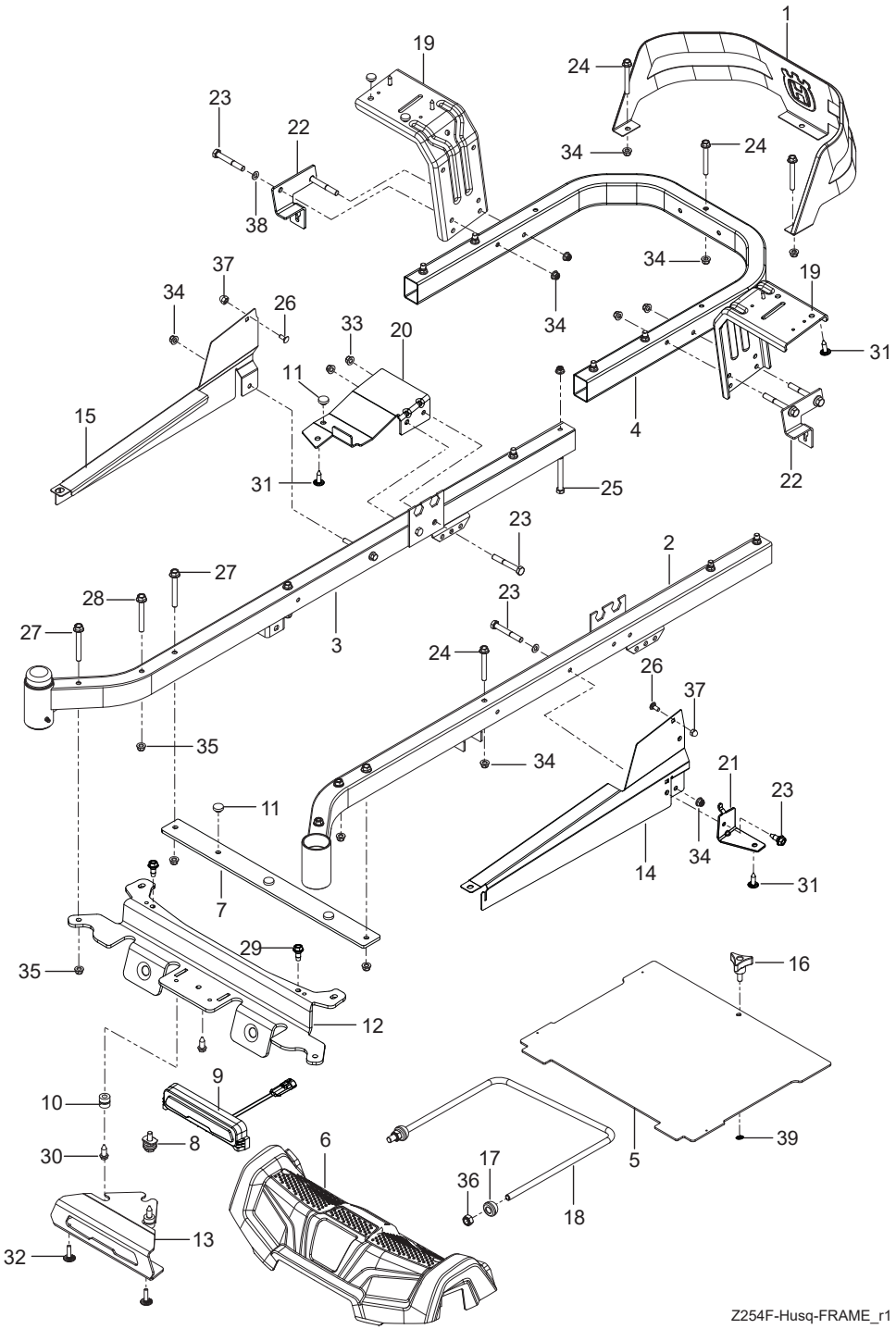

Z254F-Husq-FRAME_r1

Ref.	Part No.	Qty	Description	Kit / Assy Includes
1	596 75 15-01	1	Seat	
2	596 67 94-02	1	Bracket Seat Pan RH	
3	586 22 08-02	1	Plate, Lift Support	
4	586 22 12-02	1	Plate, Deck Lift	
5	589 76 12-11	1	Support, Seat Org	
6	580 30 82-02	2	Support, Seat Rear Blk	
7	596 67 29-02	1	Bracket Seat Pan LH	
9	581 42 93-02	1	Switch, Seat	
10	596 67 30-02	1	Bracket Seat Pan Front	
11	586 42 86-01	1	Leg, Support	
12	585 98 93-01	2	Grommet, Bumper	
13	539 10 47-63	5	Retainer, U Type	
14	872 14 05-06	4	Bolt 5/16-18 x 3/4 Round Head Square Neck	
17	874 49 05-12	2	HHFS 5/16-18 x 3/4	
18	539 11 03-03	2	Bolt 5/16-18 Shoulder	
19	874 49 05-12	2	HHFS 5/16-18 x 3/4	
20	817 00 05-10	6	Screw 5/16-18 x 5/8 Washer Head	
21	539 11 28-99	4	Nut 5/16-18 Hex Flange Nyloc	
23	582 47 87-01	2	Bumper 5/16-18	
25	539 99 03-16	4	RHSNB 5/16-18 x 3/4 Gr. 5	
26	539 10 25-87	2	Grommet Bumper	
27	590 89 99-03	1	Bracket Set	
28	589 02 85-01	2	Screw Flg Locking 1/4-20 x .75	
	NOT SHOWN - OPTIONAL			
	532 42 14-99	1	Kit, Arm Rest	

Z 254F, 96795400300

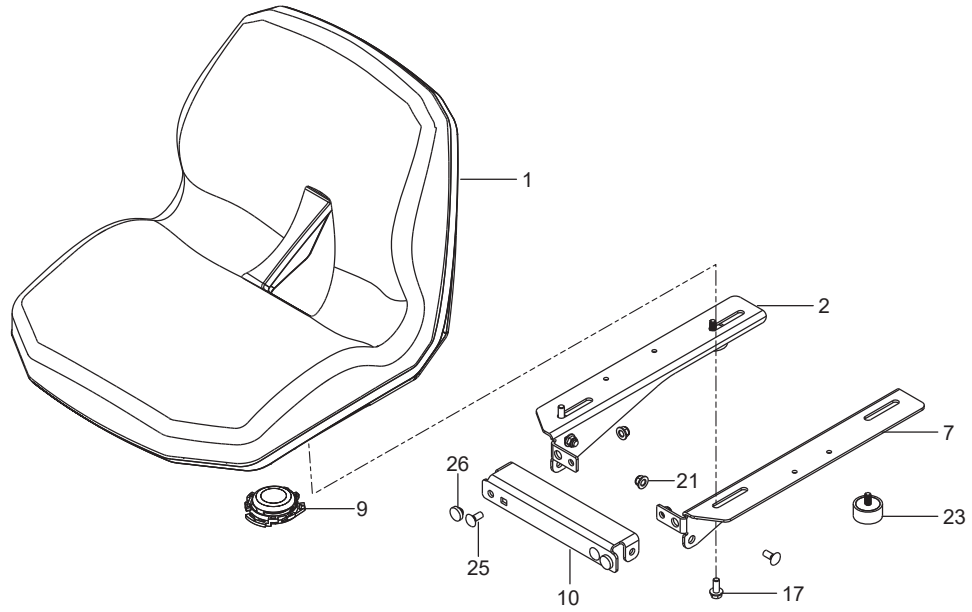

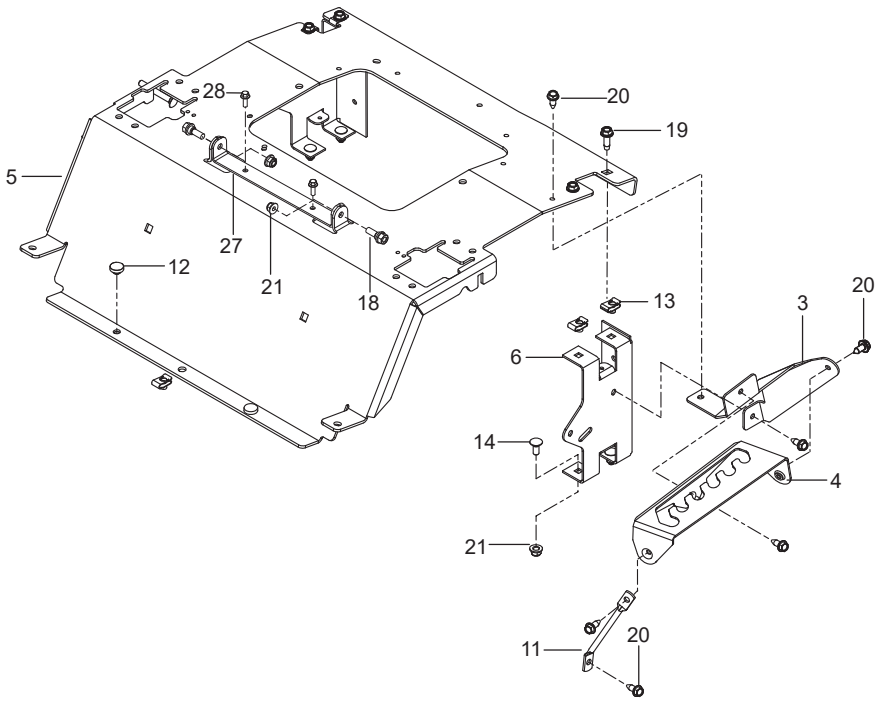

Ref.	Part No.	Qty	Description	Kit / Assy Includes
1	585 03 98-02	1	Guard, Rear Blk	
2	589 28 34-02	1	Frame, Front Right Org	
3	589 28 33-02	1	Frame, Front Left Org	
4	584 99 10-02	1	Frame, Rear Tube Org	
5	522 84 29-02	1	Foot Plate w/ Safety Decal	
6	586 70 38-01	1	Cover, Footrest w/Decal	
7	585 52 30-04	1	Support, Footrest	
8	587 54 69-01	1	Assembly, Isolator Screw Adj. Bolt	
9	585 91 67-01	1	Assembly, LED Light	
10	587 22 52-01	2	Grommet, Push	
11	585 98 93-01	7	Grommet, Bumper	
12	585 52 31-04	1	Cross Member	
13	587 45 86-02	1	Bracket, Light	
14	585 33 16-02	1	Cover, Rail Right	
15	585 33 15-02	1	Cover, Rail Left	
16	539 10 44-11	1	Knob w/ Stud	
17	532 19 52-63	2	Bushing, Pivot	
18	521 93 81-01	1	Link, Front Suspension	
19	580 50 13-02	2	Support, Fender Blk	
20	585 52 34-04	1	Support, Console Right	
21	585 52 36-04	1	Support, Console Left	
22	585 47 43-02	2	Bracket, Bypass Rod	
23	874 78 05-36	7	Bolt 5/16-18 x 2-1/4 Hex Head	
24	874 49 05-44	5	Bolt 5/16-18 Hex Head	
25	874 78 06-48	8	Bolt 3/8-16 x 3 Hex Head	
26	585 94 00-01	2	Bolt 5/16-18 x 1 Round Head Square Neck	
27	577 11 77-01	4	Bolt 3/8-16 x 3 Hex Head	
28	586 65 43-01	2	Bolt 3/8-16 x 3 Shoulder	
29	586 88 11-01	2	Bolt 5/16-18 Shoulder	
30	817 58 05-20	2	Screw Thdrol 5/16-18 x 1.25	
31	532 41 63-58	6	Screw #10 x 3/4 Hex Head	
32	532 42 17-56	2	Screw #10 x 1/2 Hex Head	
33	873 90 05-00	2	Nut 5/16-18 Hex Flange Lock	
34	539 11 28-99	9	Nut 5/16-18 Hex Flange Nyloc	
35	521 99 65-01	8	Nut 3/8-16 Hex Flange Nyloc	
36	539 11 91-24	2	Nut 7/16-14 Hex Nyloc	
37	585 93 81-01	2	Nut 5/16-18 Acorn	
38	819 11 11-16	6	Washer 5/16 SAE Flat	
39	532 42 30-63	1	Palnut 5/16"	

Z 254F, 96795400300

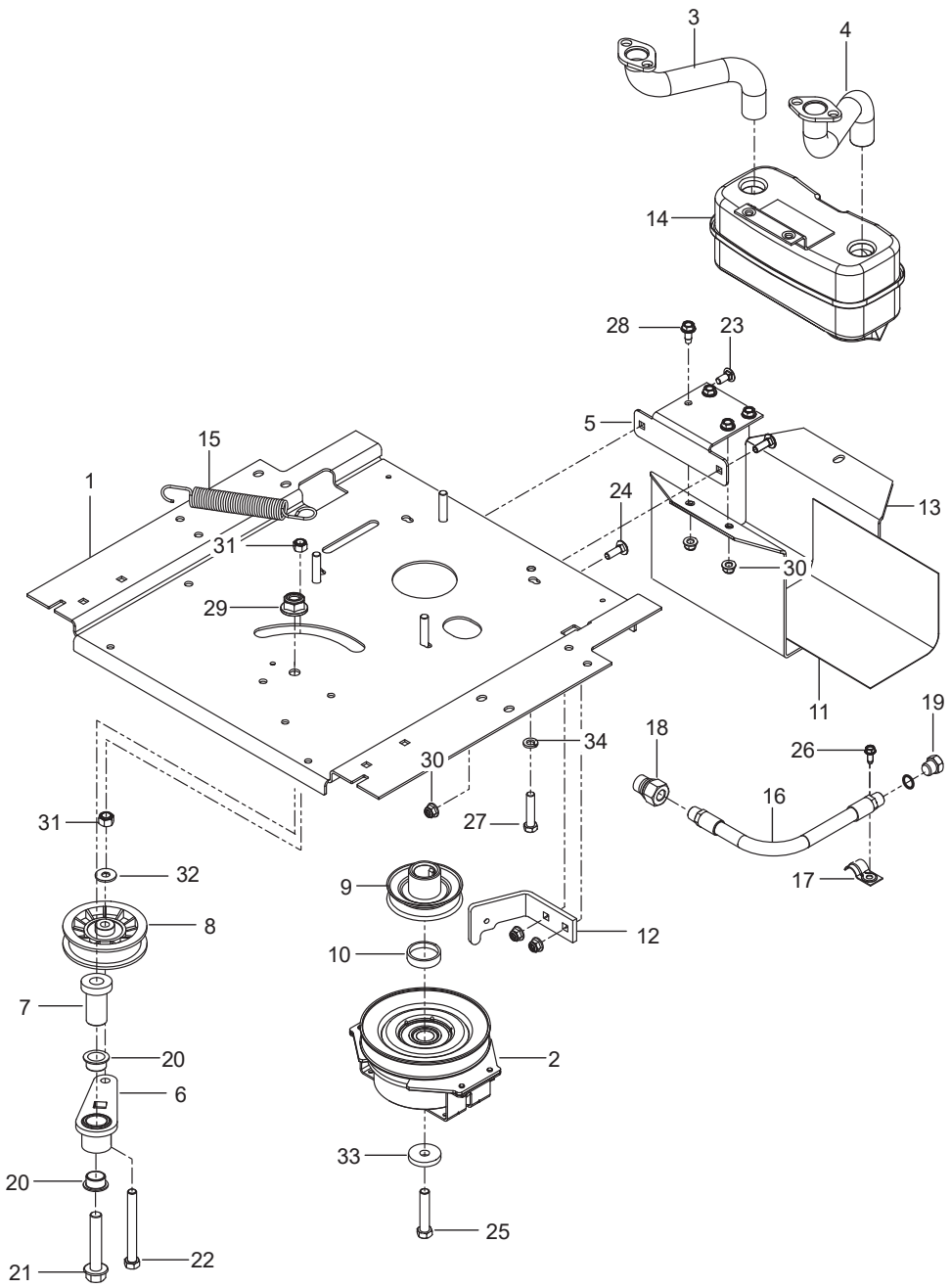

Ref.	Part No.	Qty	Description	Kit / Assy Includes
1	591 12 00-01	1	Deck Org	
2	592 95 18-01	1	Belt 54" Deck	
3	582 76 05-01	3	Blade, Hi-lift	
4	590 30 44-03	1	Belt Shield, Left Gry	
5	590 30 42-03	1	Belt Shield, Right Gry	
6	539 13 18-98	3	Mandrel, Cast Iron	14, 23
7	589 52 73-01	4	Wheel, Gauge	
8	574 16 96-01	2	Roller, Gauge	
9	532 17 57-08	3	Pulley, Mandrel	
10	532 19 73-79	2	Pulley Idler	
11	532 19 73-80	1	Pulley Idler	
12	590 63 22-01	1	Deflector 54" Org	
13	532 13 14-91	1	Rod, Hinge	
14	532 11 04-85	1	Bearing	
15	582 21 96-02	1	Arm, Idler	
16	587 14 05-02	2	Arm, Suspension	
17	532 41 55-98	1	Port, Washout	
18	532 41 64-05	1	Coupling, Quick Connect	
19	539 11 87-62	2	Spring	
20	587 35 47-01	1	Spring, Deflector	
21	587 35 84-01	1	Spring, Extension	
22	574 19 65-01	1	Tube, Roller Axle	
23	532 18 72-91	1	Shaft	
24	589 81 33-01	3	Plug, Hole Blk	
25	590 73 25-01	1	Bumper	
26	532 19 42-09	2	Pin, Cotter 7/16 Bow Tie	
27	532 19 51-61	2	Stud, w/ Anti-Rotate	
28	532 17 01-65	2	Bolt 5/16-18 Shoulder	
29	532 19 34-06	4	Bolt 3/8-16 x 3-5/8 Shoulder	
30	532 19 30-03	3	Bolt/Washer 7/16-20	
31	539 11 55-74	1	Bolt Eye 5/16 x 3-1/2	
32	584 95 39-01	12	Bolt 5/16-18 x 1-1/4 Hex Washer Hd	
33	872 11 06-16	1	Bolt 3/8-16 x 2 Round Hd Square Neck	
34	872 14 08-64	1	Bolt 1/2-13 x 8 Round Hd Square Neck	
35	532 19 65-39	2	Bolt, Shoulder	
36	532 13 77-29	9	Screw 1/4-20 x 5/8 Thread Roll	
37	817 49 06-28	1	Screw 3/8-16 x 1-3/4 Hex Thread Form	
38	588 43 83-01	1	Screw 7/16-14 x 2-1/8 Washer Hd	
39	532 40 02-34	3	Nut 9/16 Top Center Lock	
40	873 90 06-00	5	Nut 3/8-16 Hex Flange Lock	
41	521 99 11-01	1	Nut 1/2-13 Hex Flange Nyloc	
42	539 99 05-85	2	Nut 5/16-18 Hex Whizlock	
43	873 90 05-00	2	Nut 5/16-18 Hex Flange	
44	532 11 04-52	1	Pushnut	
45	532 17 85-15	1	Washer, Flat Hardened	
46	532 18 76-90	3	Washer Spacer	
47	819 19 19-12	2	Washer, Clear	
48	539 13 17-67	1	Mandrel, Housing	

Z 254F, 96795400300

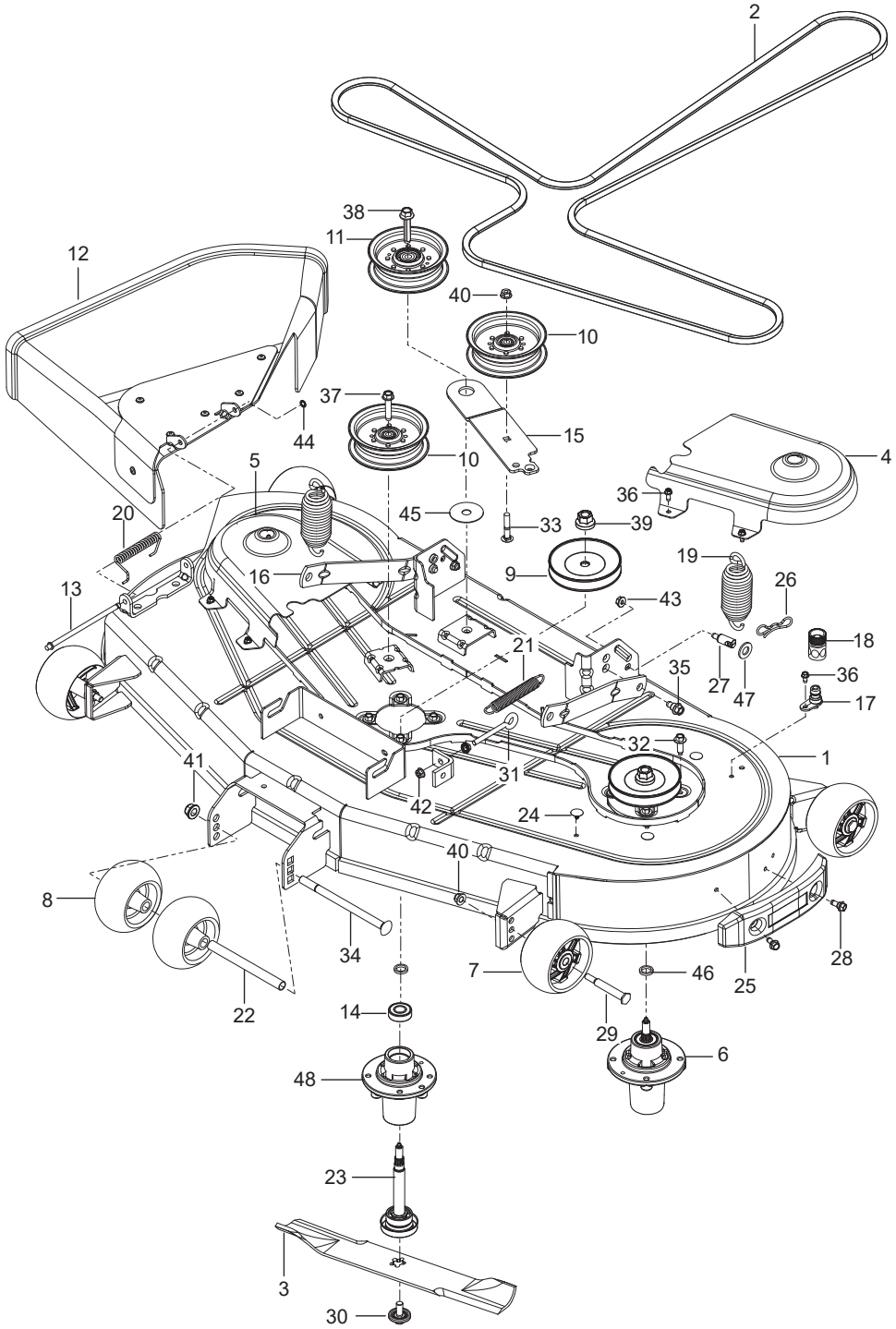

Ref.	Part No.	Qty	Description	Kit / Assy Includes
1	593 89 86-02	1	Plate, Engine Blk	
2	587 24 16-01	1	Clutch	
3	583 95 57-01	1	Tube, Exhaust Right	
4	583 95 56-01	1	Tube, Exhaust Left	
5	581 88 67-02	1	Bracket, Muffler Blk	
6	532 44 81-45	1	Arm, Idler	
7	582 53 89-01	1	Spindle, Idler	
8	539 11 03-11	1	Pulley, Idler	
9	587 53 74-01	1	Pulley, Engine	
10	587 66 01-01	1	Spacer	
11	539 13 28-59	1	Shield, Muffler	
12	587 63 33-02	1	Stop, Clutch Blk	
13	587 45 12-02	1	Guard, Muffler Blk	
14	539 13 16-04	1	Muffler Assembly	
15	532 19 61-05	1	Spring, Deck Drive	
16	584 82 55-01	2	Assy, Drain Hose	
17	539 10 13-63	1	Clamp	
18	522 59 90-01	1	Adapter, Oil Drain	
19	585 80 71-01	1	Plug, Oil	
20	501 60 37-01	2	Bearing, Flanged	
21	582 53 95-01	1	Bolt 1/2-13 x 2-3/4 Hex Flange Hd	
22	874 52 06-56	1	Bolt 3/8-16 x 3-1/2 Hex Hd	
23	539 99 03-16	2	Bolt 5/16-18 x 3/4 Gr. 5 ZD	
24	539 99 02-08	2	Bolt 5/16-18 x 1 Gr. 5 ZD	
25	581 33 28-03	1	Bolt 7/16-20 x 2-1/2 Hex Hd	
26	817 49 04-10	1	Screw 1/4-20 X 5/8 Thread Form	
27	874 78 06-20	4	Bolt 3/8-16 x 1-3/4 Fin Hex	
28	817 49 05-12	4	Screw 5/16-18 x 3/4 Thread Form	
29	521 99 11-01	1	Nut 1/2-13 Hex Flange Nyloc	
30	539 11 28-99	5	Nut 5/16-18 Hex Flange Nyloc	
31	539 97 69-79	2	Nut 3/8-16 Hex Nyloc	
32	539 99 06-92	2	Washer 5/16 Std Flat	
33	532 12 61-97	1	Washer, Clutch	
34	539 99 01-18	4	Washer 3/8 Slotted Lock ZD	
	NOT SHOWN			
	532 17 81-51	2	Gasket Exhaust	
	532 18 43-62	4	Nut Hex Flange Toplock M8-1.25	
	539 10 81-20	4	Nut 1/4-20 Hx Thin Nyloc ZD	
	----------	1	Engine, Kawasaki FR730V 24 HP For Engine Replacement Parts, See a Kawasaki Dealer	

Z 254F, 96795400300

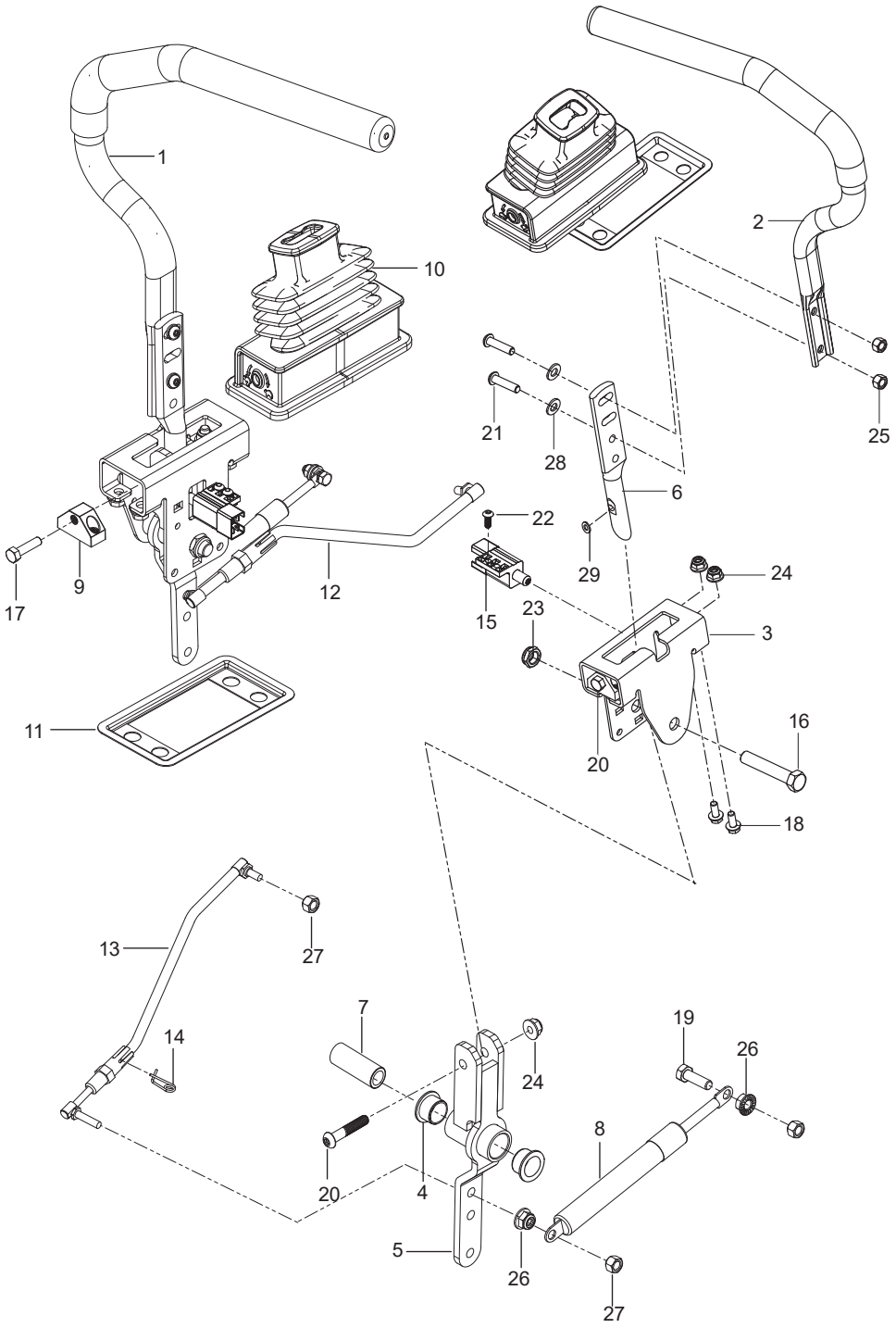

Ref.	Part No.	Qty	Description	Kit / Assy Includes
1	590 48 66-01	2	Assy, Wheel Rear 18 x 9.5	
2	576 58 86-02	2	Wheel Assembly Caster 11 x 6-5	
3	586 65 03-02	2	Yoke Orange	
4	539 11 56-38	2	Zerk 3/16 Drive	
6	539 11 26-60	2	Bearing, Flanged	
7	539 11 79-01	2	Bushing, Caster	
8	539 10 25-35	2	Grease Cap	
9	539 11 57-49	2	Plug, Caster	
10	585 99 54-01	2	Spacer, Pivot	
11	539 11 57-47	2	Spring, Caster	
12	874 95 05-16	2	Bolt, Hex 5/16-18 x 1 Nylon Patch	
13	576 60 15-01	2	Bolt 1/2-13 x 7-1/2 Round Hd Square Neck	
14	873 93 08-00	2	Nut 1/2-13 Hex Center Lock	
15	587 65 39-02	8	Nut 1/2 Lug	
16	539 11 56-75	2	Washer	
17	819 18 22-12	2	Washer 9/16	

Z 254F, 96795400300

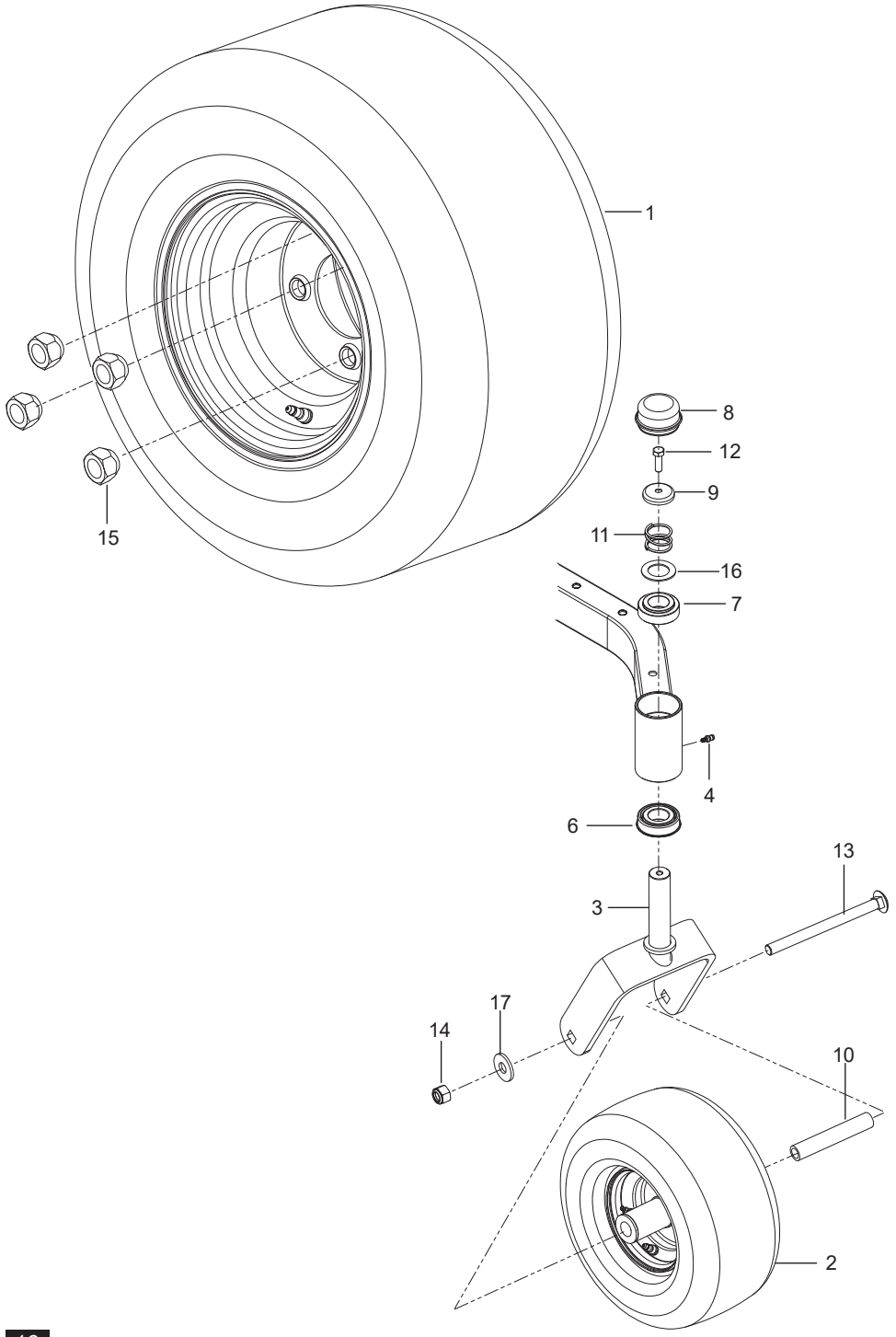

Ref.	Part No.	Qty	Description	Kit / Assy Includes
1	590 09 08-03	1	Lever w/ Grip Right Blk	
2	590 09 08-04	1	Lever w/ Grip Left Blk	
3	585 12 47-05	2	Bracket, Control	
4	539 13 15-18	4	Bearing, Flanged	
5	576 14 03-01	2	Control, Lever	
6	587 60 17-02	2	Lever, Handle	
7	584 92 72-01	2	Spacer, Pivot Control	
8	539 10 27-20	2	Dampener	
9	581 43 75-01	2	Block, Tracking	
10	585 83 16-01	2	Boot, Steering	
11	585 48 82-02	2	Flange, Boot	
12	588 60 49-01	2	Assy, Right Control Linkage	14
13	588 60 50-01	2	Assy, Left Control Linkage	14
14	532 19 98-49	2	Clip, Spring	
15	587 60 15-01	2	Switch, Interlock	
16	874 78 08-44	2	Bolt 1/2-13 x 2-3/4 Hex Head	
17	585 98 61-01	2	Bolt 5/16-18 x 1-1/4 Hex Head	
18	874 49 05-12	8	Bolt Hex Flange 5/16-18 x 3/4	
19	539 99 02-09	2	Bolt 5/16-18 x 1 Hex Head	
20	587 88 53-01	2	Screw 5/16-18 x 1-3/4 Button Head	
21	585 98 59-01	4	Screw 5/16-18 x 1-1/4 Button Head Blk	
22	586 93 60-01	2	Screw #10-24 x 1/2 Socket Hd	
23	539 10 80-10	2	Nut 1/2-13 Hex Jam Nyloc Grade 2	
24	539 11 28-99	10	Nut 5/16-18 Hex Flange Nyloc	
25	585 98 60-01	4	Nut 5/16-18 Hex Nyloc Blk	
26	539 99 05-85	4	Nut 5/16-18 Hex Whiz Lock	
27	873 80 05-00	4	Nut 5/16-18 Hex Nyloc	
28	819 11 11-16	4	Washer 11/32 16 Gauge	
29	587 61 42-01	2	Washer 11/32	

Z 254F, 96795400300

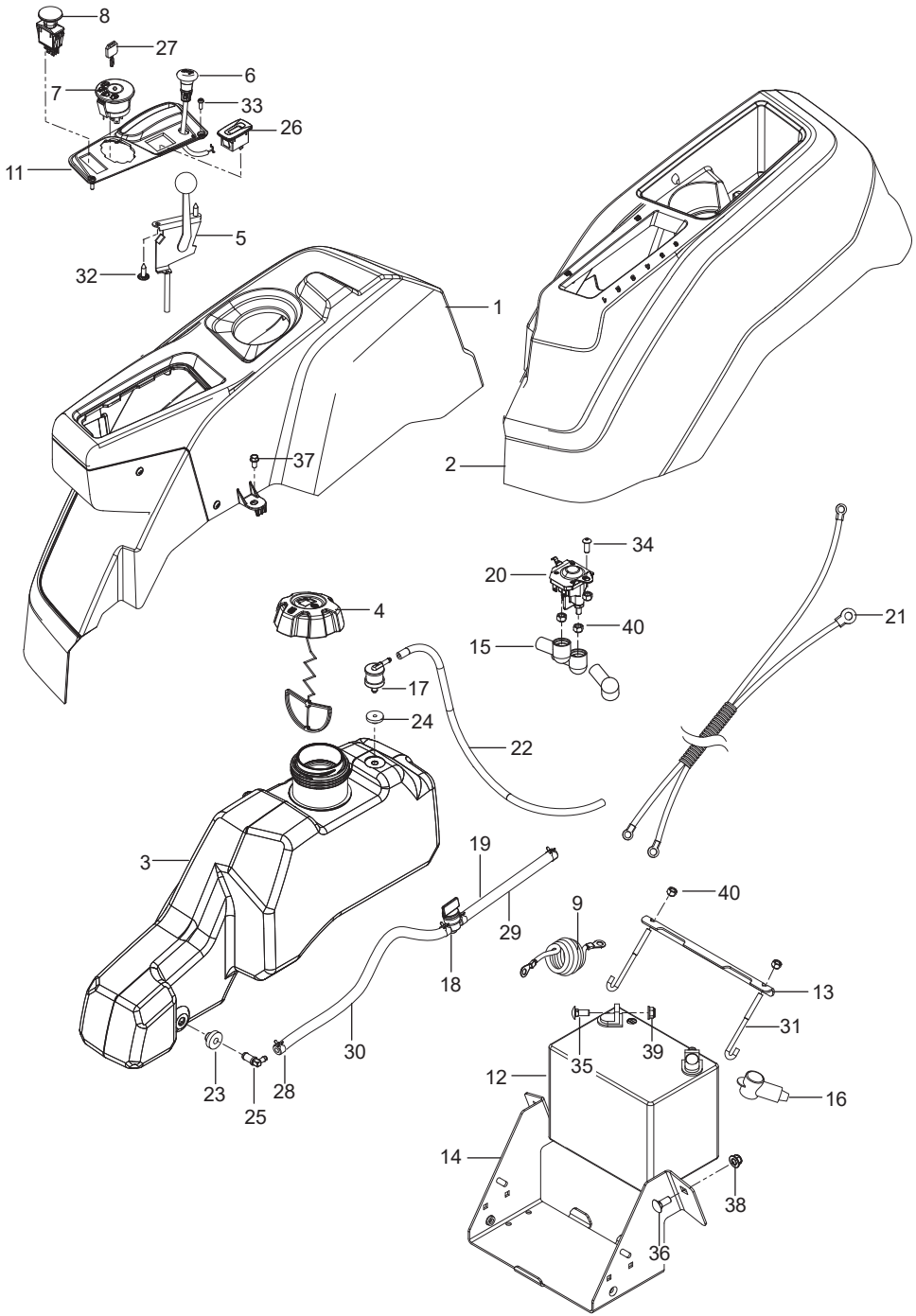

Ref.	Part No.	Qty	Description	Kit / Assy Includes
1	510 37 56-01	1	EZT, Left	
2	510 37 56-02	1	EZT, Right	
3	574 03 05-01	1	Rod, EZT Brake Left	
4	574 03 05-02	1	Rod, EZT Brake Right	
5	539 11 04-11	1	Belt, EZT	
6	585 47 44-01	1	Rod, Bypass Left	
7	585 47 45-01	1	Rod, Bypass Right	
8	586 66 51-01	2	Spring, Bypass	
9	539 11 03-42	2	Spring, Brake Rod	
10	539 12 00-80	2	Cog, Brake Disc	
11	539 12 00-79	2	Assembly Kit, Brake Arm	
12	575 50 70-01	1	Assembly Kit, Hub w/ Nuts	
13	501 40 36-02	2	Assembly Kit, Blade, Pulley	
14	510 18 41-04	2	Spacer Tube	
15	580 80 65-02	2	Support, EZT Front	
16	580 80 66-02	2	Mount, EZT Rear Blk	
17	587 22 53-01	1	Clip	
18	539 97 69-88	4	Clip	
19	587 11 53-01	1	Pin, Clevis	
20	874 78 05-44	4	Bolt 5/16-18 x 2-3/4 Hex Hd	
21	539 97 69-34	2	Bolt 5/16-18 x 3/4 Gr. 5 ZD	
22	874 78 05-36	2	Bolt 5/16-18 x 2-1/4 Hex Hd	
23	539 99 06-37	4	Bolt 3/8-16 x 2-1/2 Gr. 5 ZD	
24	873 80 05-00	4	Nut 5/16-18 Hex Nyloc	
25	539 97 69-78	2	Nut 1/4-20 Hex Nyloc ZD	
26	819 11 11-16	16	Washer 11/32 16 Gauge	
27	539 99 01-18	4	Washer 3/8 Splt Lock ZD	
28	819 13 13-16	8	Washer 3/8 SAE Flat	
29	819 09 10-16	4	Washer 1/4 SAE Flat	

Z 254F, 96795400300

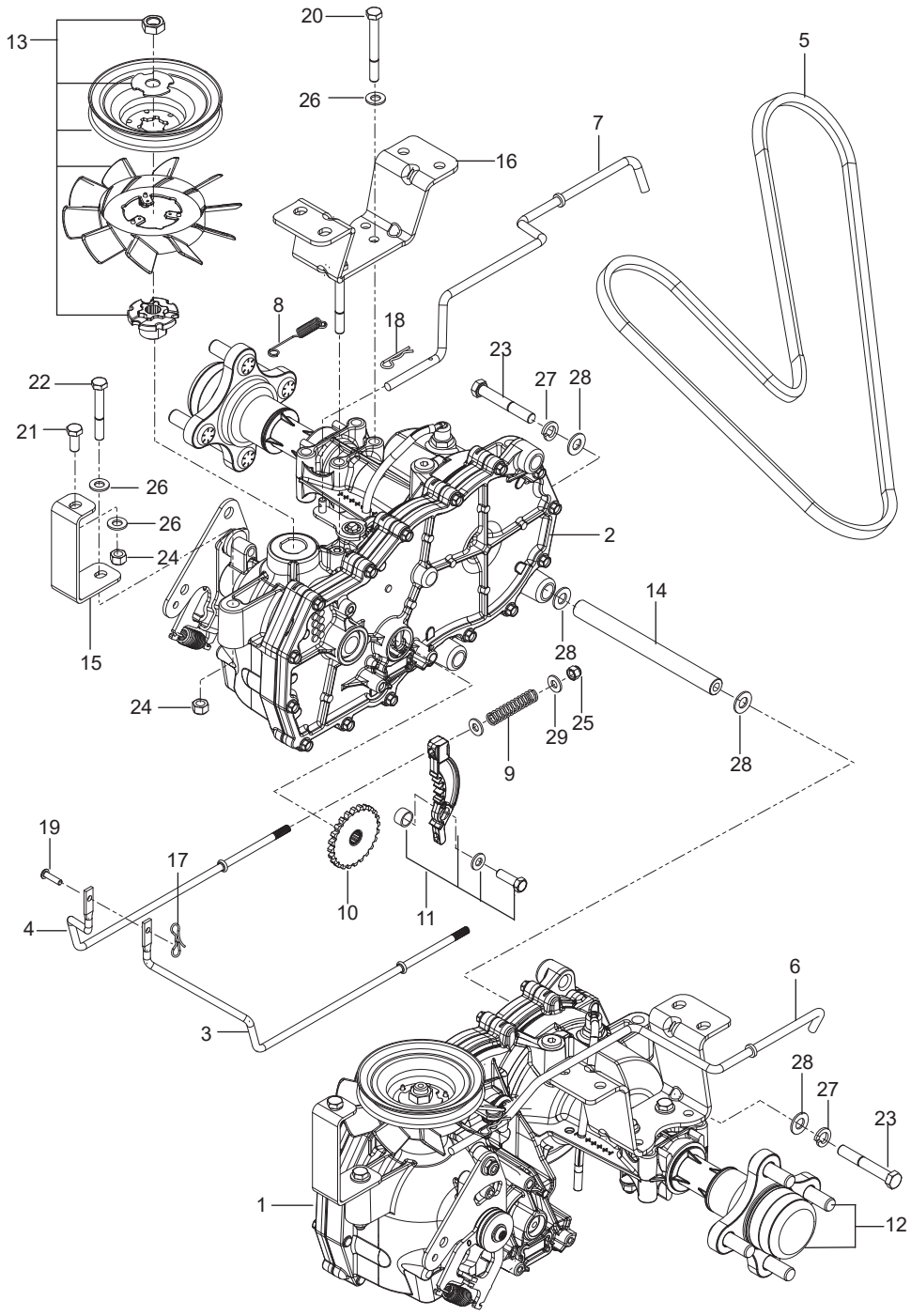

Ref.	Part No.	Qty	Description	Kit / Assy Includes
1	585 52 28-01	1	Assembly, Fender, Right Gry	
2	586 62 12 01	1	Assembly, Fender, Left Gry	
3	589 92 47-02	1	Assembly, Fuel Tank	23, 24, 25
4	585 12 48-01	1	Cap, Fuel w/ Tether	
5	539 11 24-38	1	Cable, Throttle	
6	586 88 15-01	1	Control, Choke	
7	539 10 75-41	1	Switch, Ignition	
8	582 10 76-02	1	Switch, Blade	
9	586 10 82-01	1	Cable, Battery Positive	
11	585 52 27-01	1	Panel, Control	
12	539 10 24-63	1	Battery	
13	510 03 00-03	1	Bracket, Battery	
14	582 60 96-02	1	Box, Battery Black	
15	532 13 15-63	3	Terminal Cover	
16	539 10 27-59	1	Terminal Cover	
17	576 61 81-01	1	Valve, Fuel Check	
18	539 91 63-25	1	Valve, Fuel	
19	586 12 39-06	1	Assembly, Fuel Line w/ Valve	18, 28, 29, 30
20	582 04 28-01	1	Solenoid	
21	587 19 86-01	1	Harness, Battery Cable	
22	587 04 45-50	1	Hose 3/16 x 50" Vapor	
23	532 00 36-45	1	Grommet, Rubber	
24	532 43 74-92	1	Grommet, Check Valve	
25	532 13 92-77	1	Elbow	
26	586 16 18-01	1	Meter, Service	
27	532 41 19-33	1	Key, Ignition	
28	532 12 34-87	4	Clamp, Hose	
29	587 04 48-10	1	Hose 1/4 x 10" Fuel	
30	587 04 48-18	1	Hose 1/4 x 18" Fuel	
31	588 83 94-01	2	J Hook	
32	532 14 18-41	2	Screw 10-16 x .65	
33	545 22 71-01	2	Screw 6-19 x 7/16 Pan Hd	
34	539 11 12-29	1	Screw 1/4-20 x 5/8 Button Socket	
35	539 99 03-16	2	Bolt 5/16-18 x 3/4 Gr. 5 ZD	
36	539 99 06-45	2	Bolt 3/8-16 x 1 Round Hd Square Neck	
37	817 49 04-08	2	Bolt 1/4-20 x 1/2	
38	521 99 65-01	2	Nut 3/8-16 Hex Flange Nyloc	
39	539 11 28-99	2	Nut 5/16-18 Flange Nyloc	
40	539 97 69-78	5	Nut 1/4-20 Hex Nyloc	
	NOT SHOWN			
	586 33 73-01	1	Harness, Wiring	
	586 54 81-01	1	Harness., LED Light	
	532 10 97-48	1	Relay 40A	
	505 28 00-01	1	Tie Wrap 8-3/8" w/ Clip	

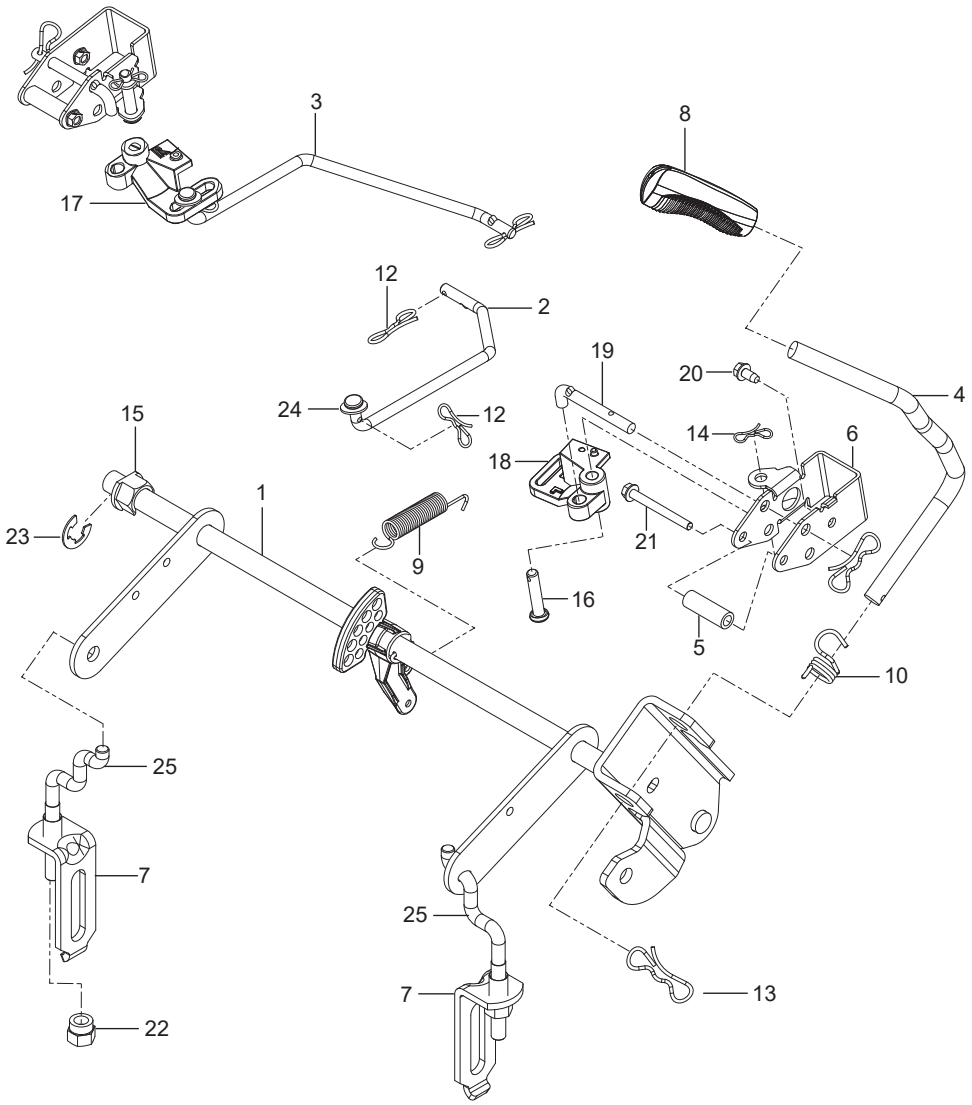

Ref.	Part No.	Qty	Description	Kit / Assy Includes
1	586 42 97-02	1	Assembly, Shaft	
2	586 45 71-01	1	Link, Brake Left	
3	586 45 72-01	1	Link, Brake Right	
4	586 42 87-01	1	Lift Handle	
5	580 48 61-01	2	Spacer	
6	585 68 21-02	2	Bracket, Bellcrank	
7	522 85 86-01	2	Centering Link Brkt	
8	580 96 23-01	1	Grip, Handle Black	
9	586 86 76-01	1	Spring	
10	532 19 63-14	1	Spring	
12	587 22 53-01	4	Clip	
13	532 19 42-09	3	Clip	
14	532 19 42-08	2	Clip	
15	510 18 49-01	2	Nut, Plastic	
16	585 70 14-01	2	Pin 1/2 Clevis	
17	586 45 75-01	1	Bellcrank Right	
18	586 45 74-01	1	Bellcrank Left	
19	585 68 20-01	2	Pushrod	
20	532 13 77-29	2	Screw 1/4-20 x 5/8 Thread Roll	
21	586 56 13-01	2	Screw 1/4-20 x 2-1/4 Thread Roll	
22	532 17 59-94	2	Nut, Lift Link	
23	812 00 00-02	1	Washer, E-ring	
24	819 13 13-16	2	Washer 3/8 SAE Flat	
25	525 84 72-01	2	Link, Rear Suspension	