Z 254F, 967680901-00, 2018-01

SPARE PARTS LIST

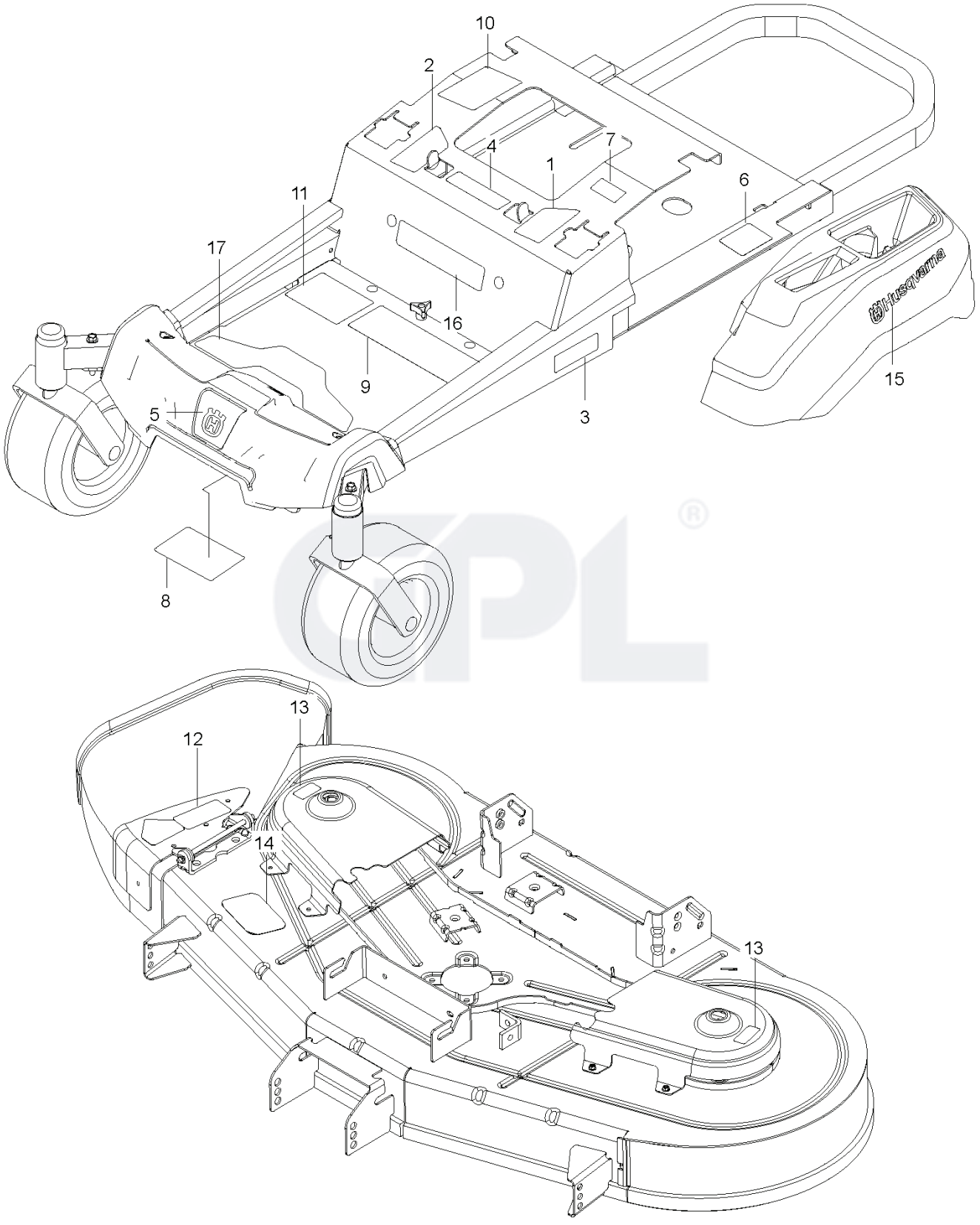
10
2
4
7
1
6
11
17
16
9
3
15
5
8
13
12
14
13

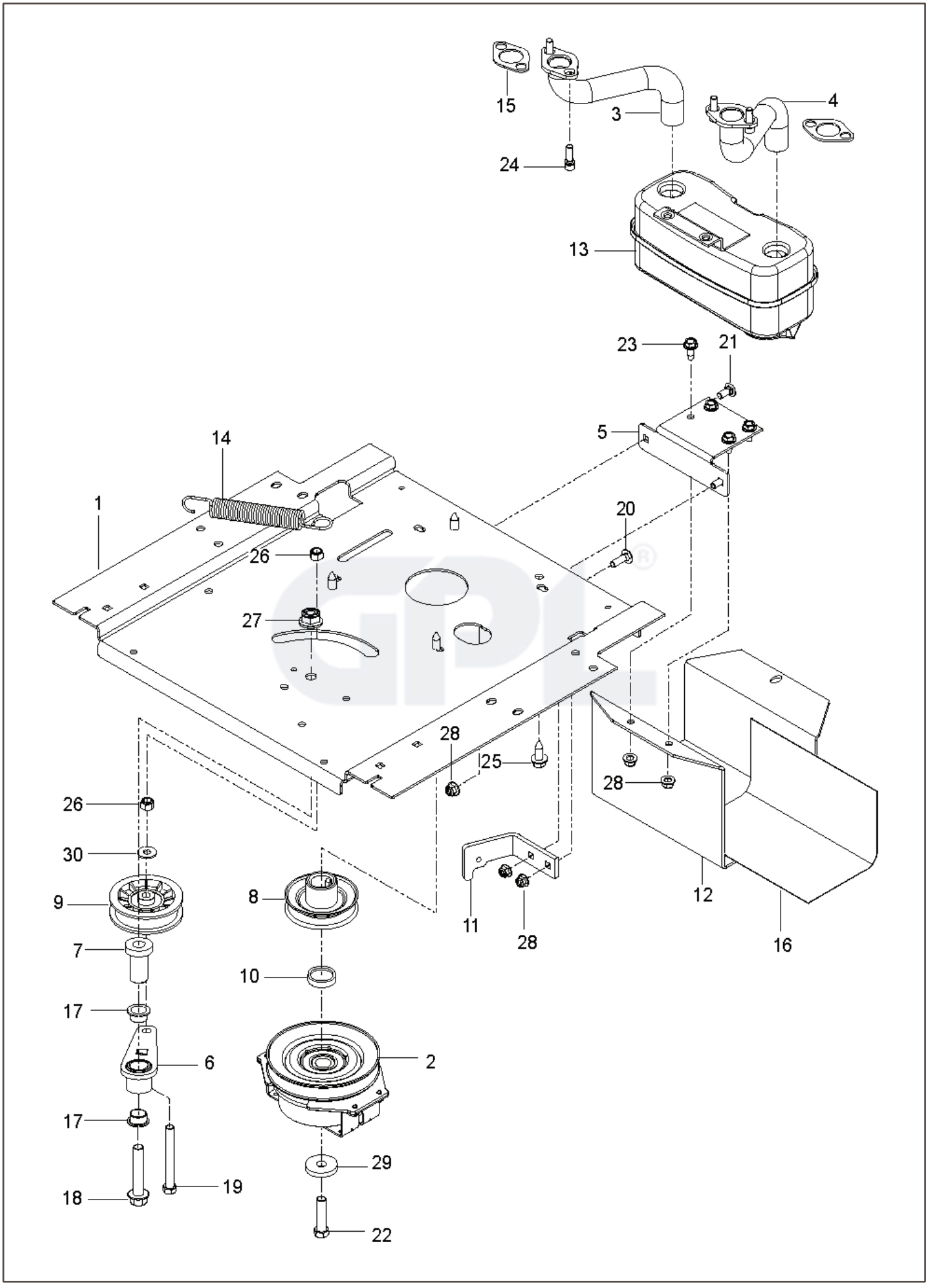
15
3
4
24
13
23
21
5
14
1
20
26
27
28
25
28
26
30
9
8
7
10
17
6
2
17
18
19
29
22
11
28
12
16

REF.	PART NO.	DESCRIPTION	REMARK	QTY.	KIT
1	588017102	PLATE		1	
2	587241601	CLUTCH		1	
3	581881101	TUBE		1	
4	581881001	TUBE		1	
5	581886702	BRACKET		1	
6	532448145	ARM		1	
7	582538901	SPINDLE		1	
8	587537401	PULLEY		1	
9	539110311	PULLEY		1	
10	587660101	SPACER		1	
11	587633302	STOP		1	
12	587451202	GUARD		1	
13	539131604	MUFFLER ASSY		1	
14	532196105	SPRING		1	
15	532165391	GASKET		2	
16	539132859	HEAT SHIELD		1	
17	501603701	BEARING		2	
18	582539501	BOLT		1	
19	874520656	BOLT		1	
20	872140508	BOLT		2	
21	872140506	BOLT		2	
22	581332803	BOLT		1	
23	817490512	SCREW		4	
24	532183906	SCREW		4	
25	539976979	NUT		2	
26	521991101	NUT		1	
27	539112899	NUT, 5/16–18, NYLOC		1	
28	539976979	NUT		2	
29	532126197	WASHER		2	
30	539990692	WASHER		1	
	000000000	W/O DESCRIPTION	Engine, Briggs & Stratton 44T877 24 HP. For engine replacement parts, see a B&S dealer.	1	

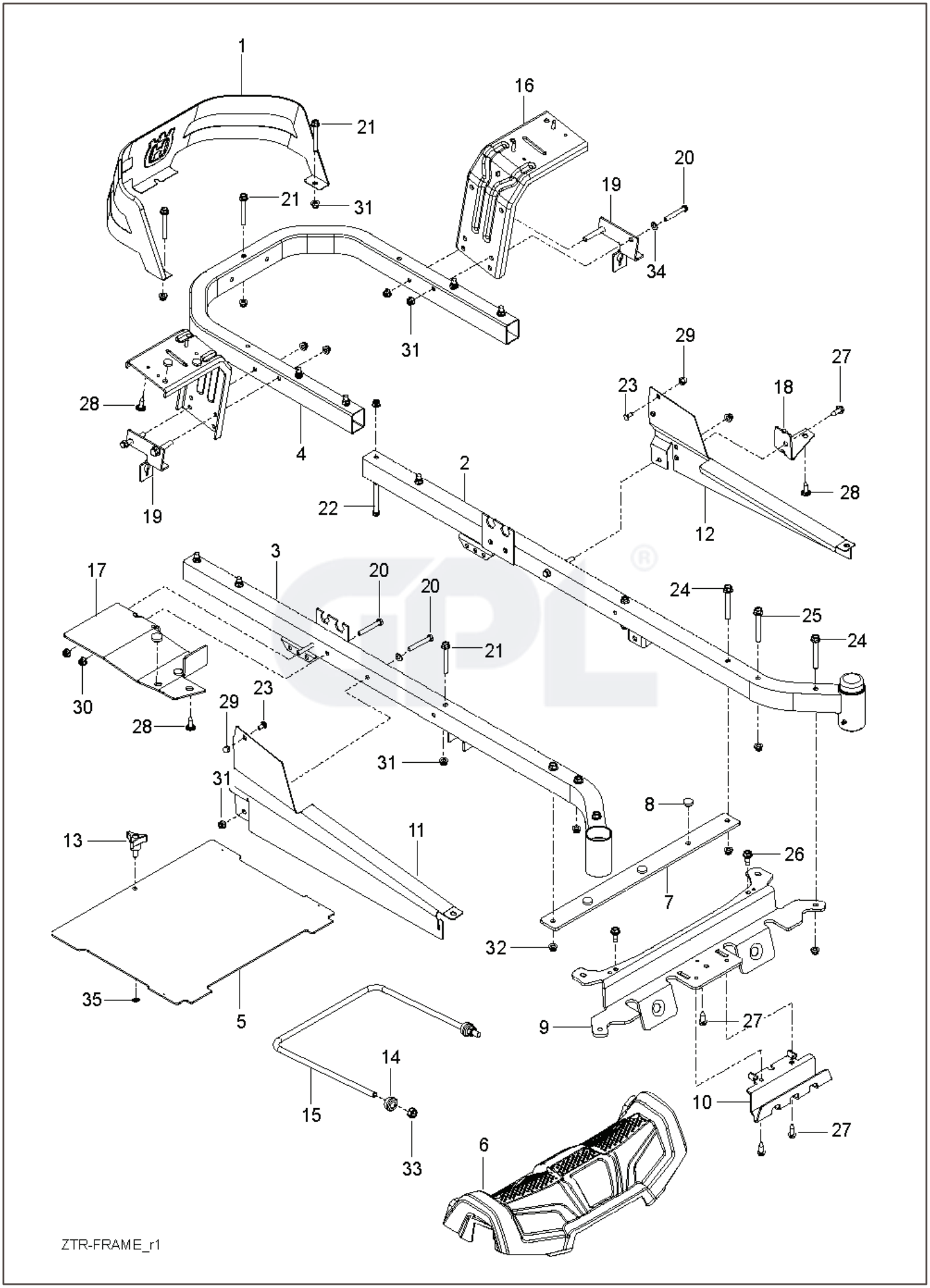
1
16
21
21
31
20
19
34
31
29
27
23
18
28
4
2
22
12
28
19
3
17
20
20
24
25
24
21
30
28
29
23
31
31
8
13
11
26
7
32
35
5
9
27
14
10
15
27
33
6
ZTR-FRAME_r1

REF.	PART NO.	DESCRIPTION	REMARK	QTY.	KIT
1	585039802	GUARD		1	
2	589283402	FRAME TUBE		1	
3	589283302	FRAME TUBE		1	
4	584991002	TUBE		1	
5	522842902	PLATE	for 967844601-00	1	
5	598712401	PLATE KIT	for 970467601-00	1	
6	585522401	FRONT COVER		1	
7	585523004	SUPPORT		1	
8	585989301	BUMPER		7	
9	585523104	CROSS MEMBER		1	
10	585523204	SKID PLATE		1	
11	585331602	COVER		1	
12	585331502	COVER		1	
13	539104411	KNOB		1	
14	532195263	BUSHING		2	
15	521938101	LINK		1	
16	580501302	BRACKET		2	
17	585523404	SUPPORT		1	
18	585523604	SUPPORT		1	
19	585474302	BRACKET		2	
20	874780536	BOLT		8	
21	874490544	SCREW		5	
22	874780648	BOLT		8	
23	585940001	BOLT		2	
24	577117701	SCREW		4	
25	586654301	BOLT		2	
26	586881101	BOLT		2	
27	817000510	BOLT		4	
28	532416358	SCREW		6	
29	585938101	NUT		2	
30	873900500	NUT		2	
31	539112899	NUT, 5/16-18, NYLOC		9	
32	521996501	NUT		8	
33	539119124	NUT		2	
34	819111116	WASHER		6	
35	532423063	WASHER		1	

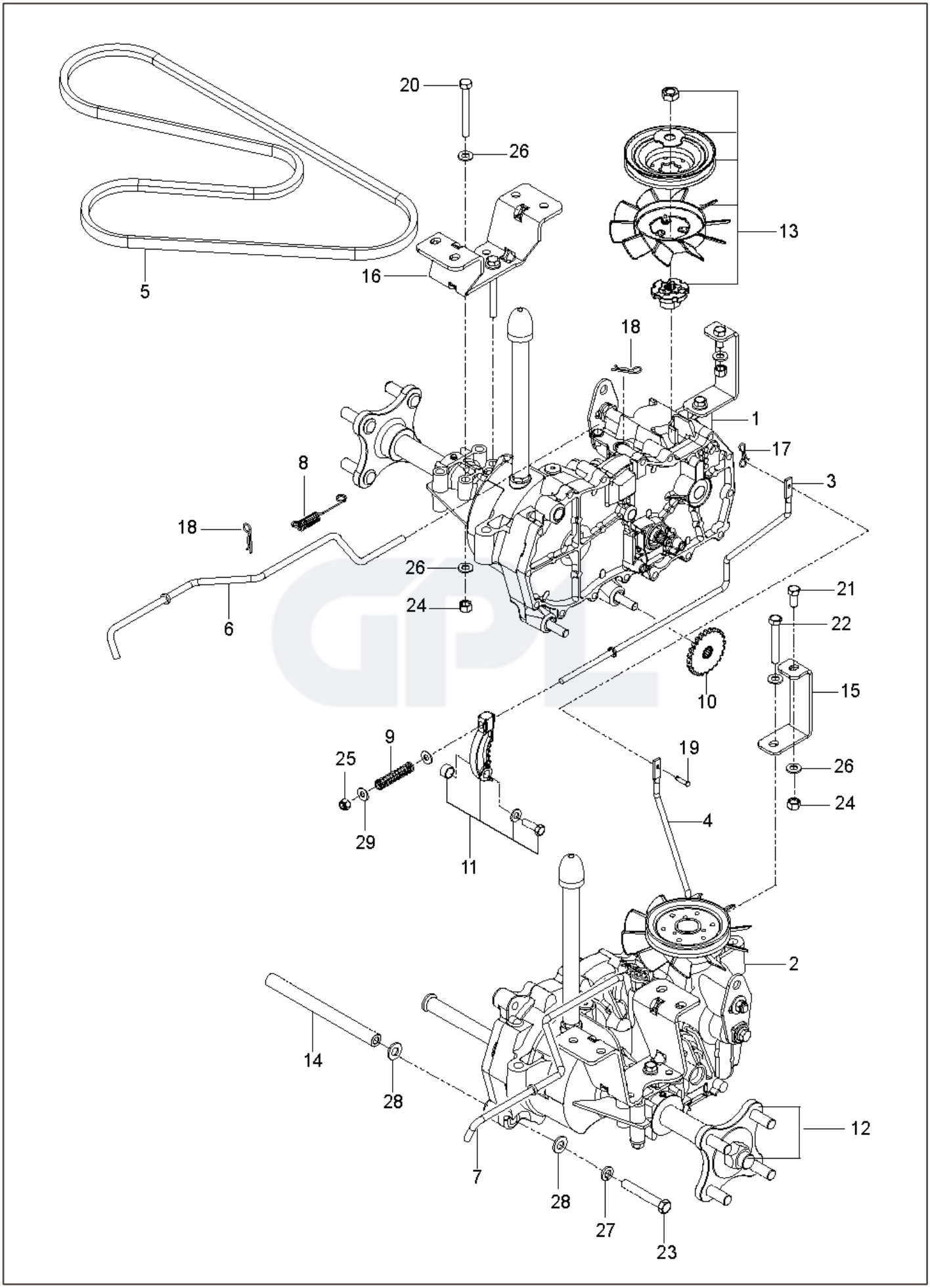
20
26
13
16
5
18
1
17
8
3
18
26
24
6
21
22
10
15
9
19
25
26
24
29
4
11
2
14
28
12
7
28
27
23

REF.	PART NO.	DESCRIPTION	REMARK	QTY.	KIT
1	510375601	TRANSMISSION		1	
2	510375602	TRANSMISSION		1	
3	574030501	LINKAGE		1	
4	574030502	LINKAGE		1	
5	539110411	BELT		1	
6	585474401	ROD		1	
7	585474501	ROD		1	
8	586665101	SPRING		2	
9	539110342	SPRING		2	
10	539120080	DISC		2	
11	539120079	ARM		2	
12	575507001	KIT		1	
13	501403602	TRANSMISSION KIT		2	
14	510184104	SPACING TUBE		2	
15	580806502	SUPPORT		2	
16	580806602	BRACKET		2	
17	587225301	PIN		1	
18	539976988	PIN		4	
19	587115301	PEN		1	
20	874780544	BOLT		4	
21	539976934	SCREW		2	
22	874780536	BOLT		2	
23	539990637	SCREW		4	
24	873800500	LOCK NUT		8	
25	539976978	NUT		2	
26	819111116	WASHER		16	
27	539990118	WASHER		4	
28	819131316	WASHER		8	
29	819091016	WASHER		4	

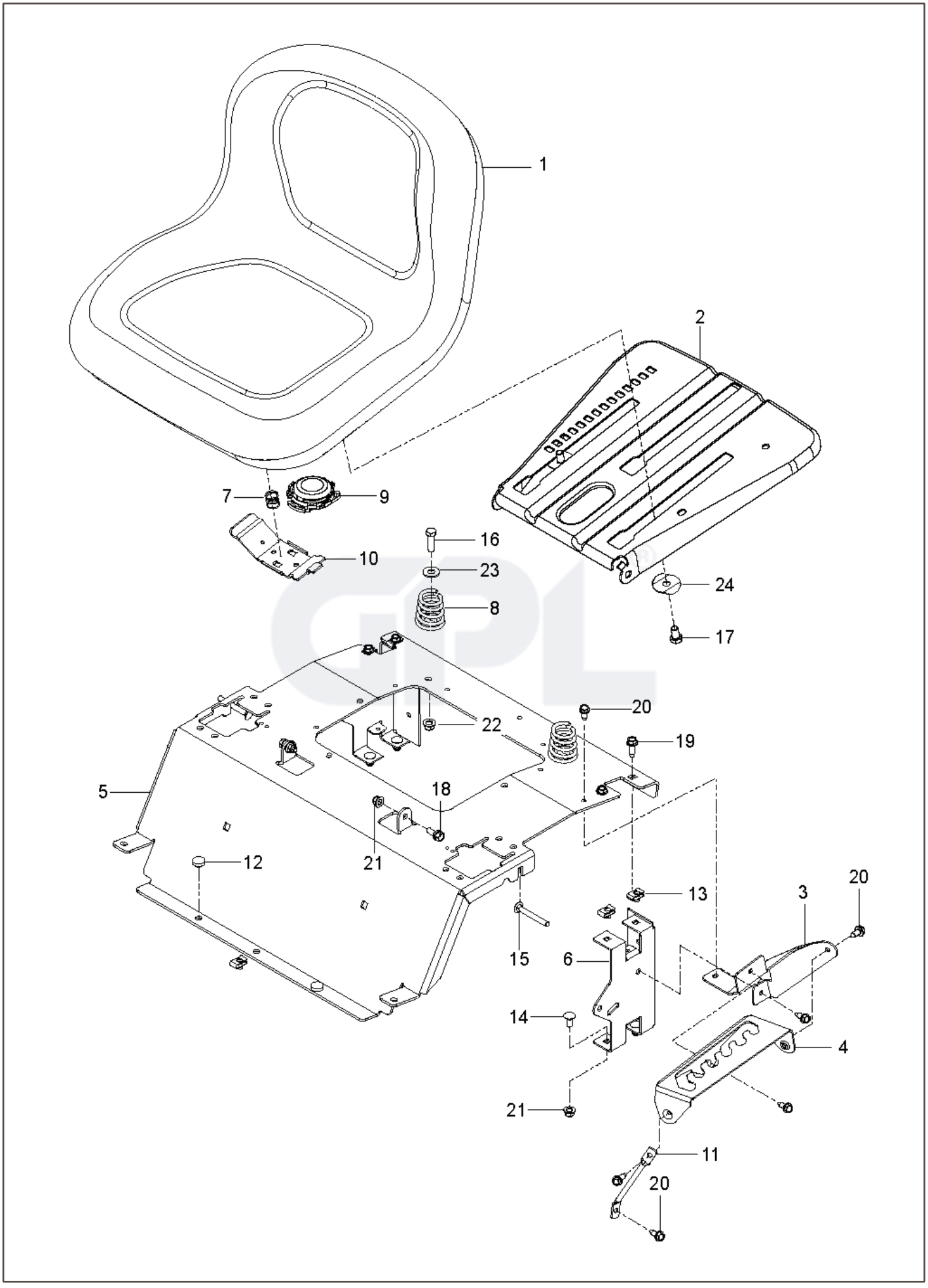
1
2
7
9
10
16
23
8
24
17
20
22
19
5
18
21
12
13
3
20
15
6
14
4
21
11
20

REF.	PART NO.	DESCRIPTION	REMARK	QTY.	KIT
1	532439822	SEAT		1	9
2	587232002	PLATE		1	
3	586220802	SUPPORT PLATE		1	
4	586221202	PLATE		1	
5	589761206	PLATE		1	
6	580308202	SUPPORT		2	
7	532198200	SPRING		1	
8	589483501	SPRING		2	
9	581429302	SWITCH		1	
10	532197661	HANDLE		1	
11	586428601	SUPPORT LEG		1	
12	585989301	BUMPER		2	
13	539104763	CLIP		5	
14	872140506	BOLT		4	
15	510422701	SCREW		2	
16	874780620	BOLT		2	
17	874760612	BOLT		1	
18	539110303	BOLT		2	
19	817490512	SCREW		4	
20	817000510	BOLT		6	
21	539112899	NUT, 5/16–18, NYLOC		4	
22	521996501	NUT		2	
23	819141614	WASHER		2	
24	501051801	WASHER		2	
	532421499	ARM REST		1	

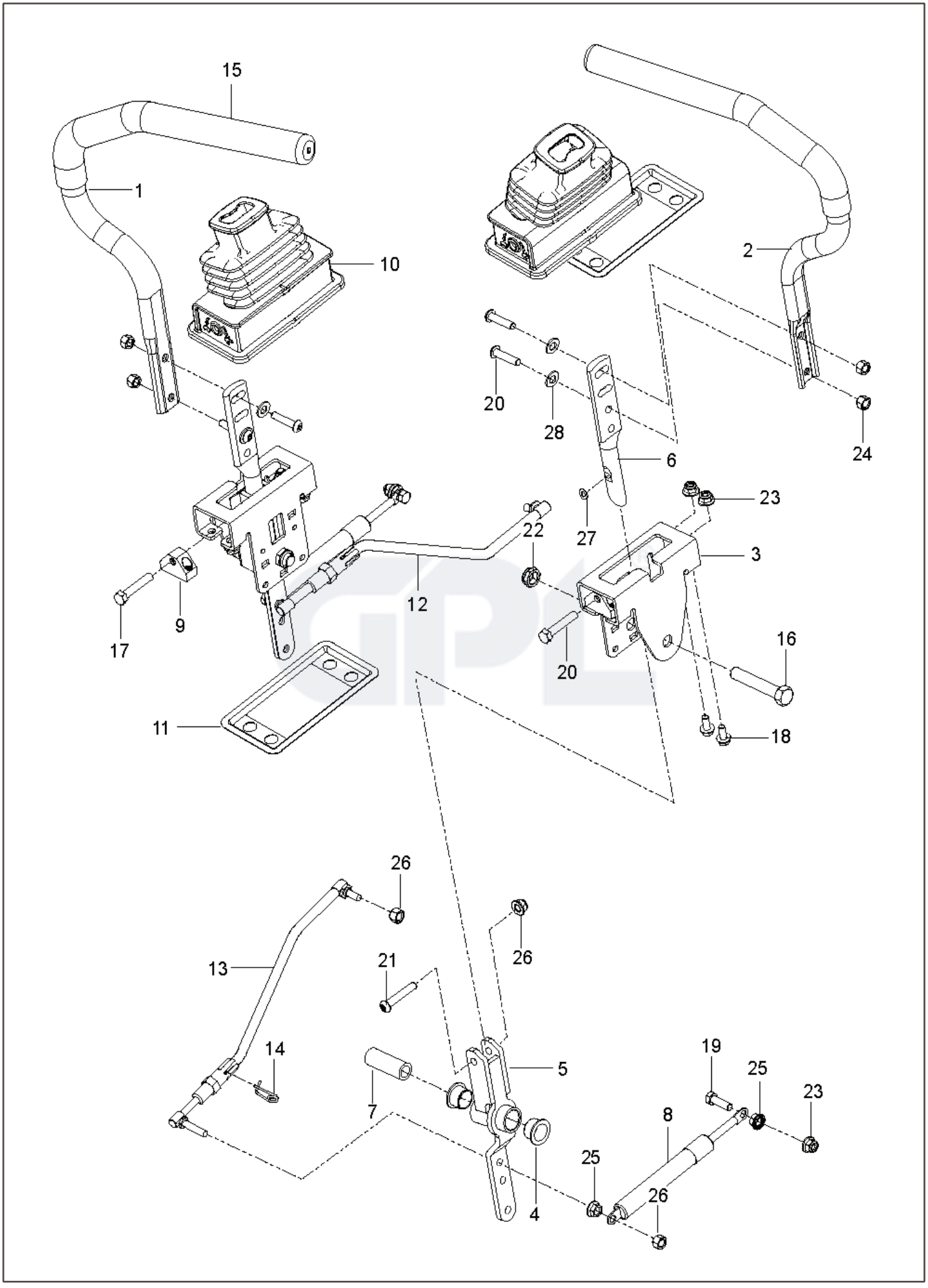
15
1
10
2
20
28
24
6
27
23
22
3
12
9
17
20
16
11
18
26
26
13
21
14
5
19
25
23
7
8
25
4
26

REF.	PART NO.	DESCRIPTION	REMARK	QTY.	KIT
1	590090803	TUBE		1	
2	590090804	TUBE		1	
3	585124705	BRACKET		2	
4	539131518	BEARING		4	
5	576140301	LEVER		2	
6	587601702	LEVER		2	
7	584927201	SPACER		2	
8	539102720	GAS SPRING		2	
9	581437501	BLOCK		2	
10	585831601	BOOT		2	
11	585488202	FLANGE		2	
12	588604901	ROD		2	14
13	588605001	ROD		2	14
14	532199849	SPRING RETAINER		2	
15	525392902	GRIP		2	
16	874780844	BOLT		2	
17	585986101	BOLT		2	
18	874490512	BOLT		8	
19	539990209	SCREW		4	
20	585985901	BOLT		4	
21	587885301	SCREW		2	
22	539108010	NUT		2	
23	539112899	NUT, 5/16–18, NYLOC		10	
24	585986001	NUT		4	
25	539990585	NUT		4	
26	873800500	LOCK NUT		8	
27	587614201	WASHER		2	
28	586309101	WASHER		4	

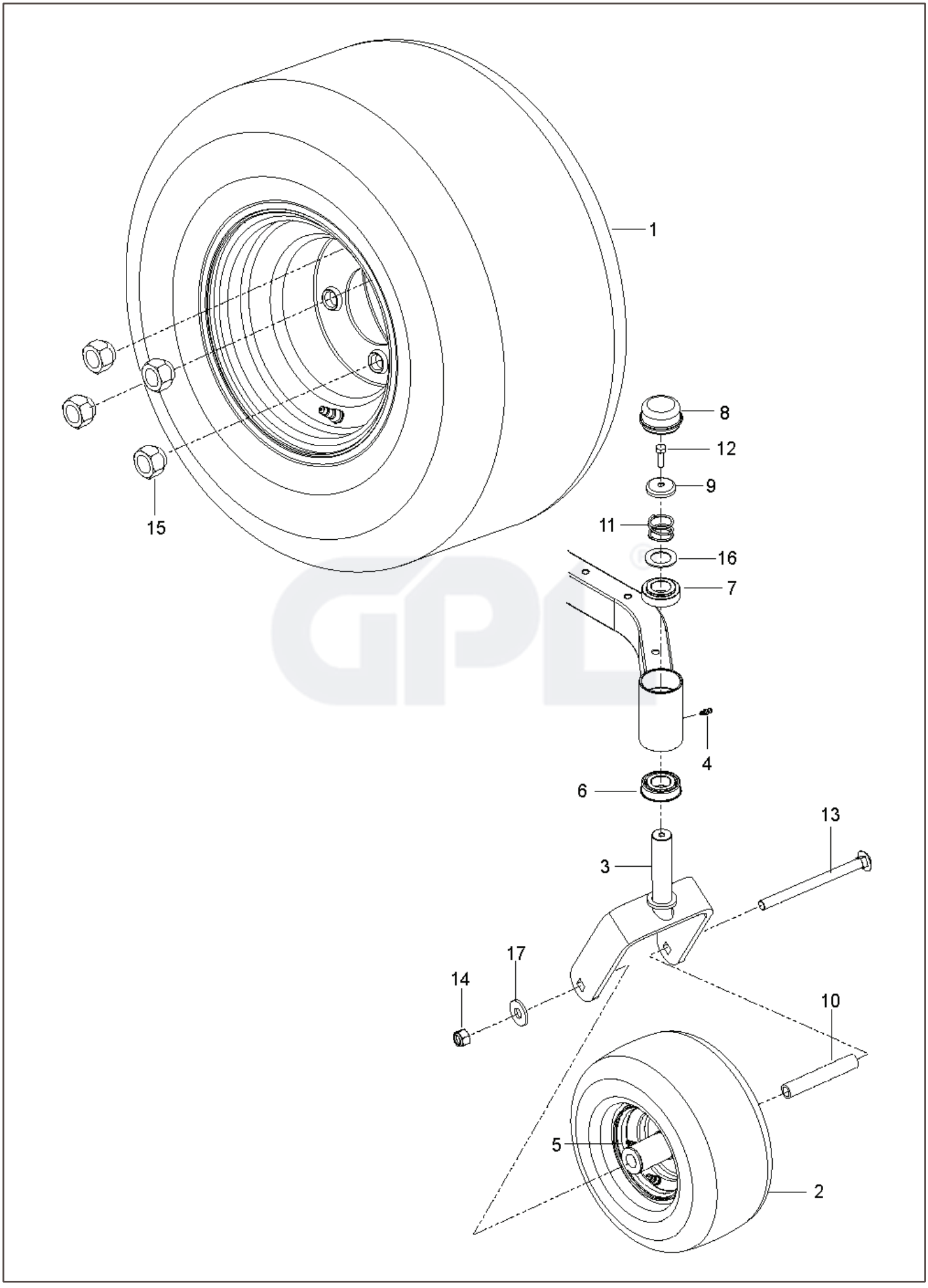
1
15
8
12
9
11
16
7
4
6
13
3
17
14
10
5
2

REF.	PART NO.	DESCRIPTION	REMARK	QTY.	KIT
1	579753401	WHEEL ASSY		2	
2	576588602	WHEEL ASSY		2	
3	586650302	YOKE		2	
4	539115638	FITTING		2	
5	539103300	NIPPLE		2	
6	539112660	BEARING		2	
7	539117901	BUSHING		2	
8	539102535	CAP		2	
9	539115749	CASTER PLUG		2	
10	585995401	SPACER		2	
11	539115747	SPRING		2	
12	874950516	SCREW		2	
13	576601501	SCREW		2	
14	873930800	NUT		2	
15	587653902	NUT		8	
16	539115675	WASHER		2	
17	819182212	WASHER		2	

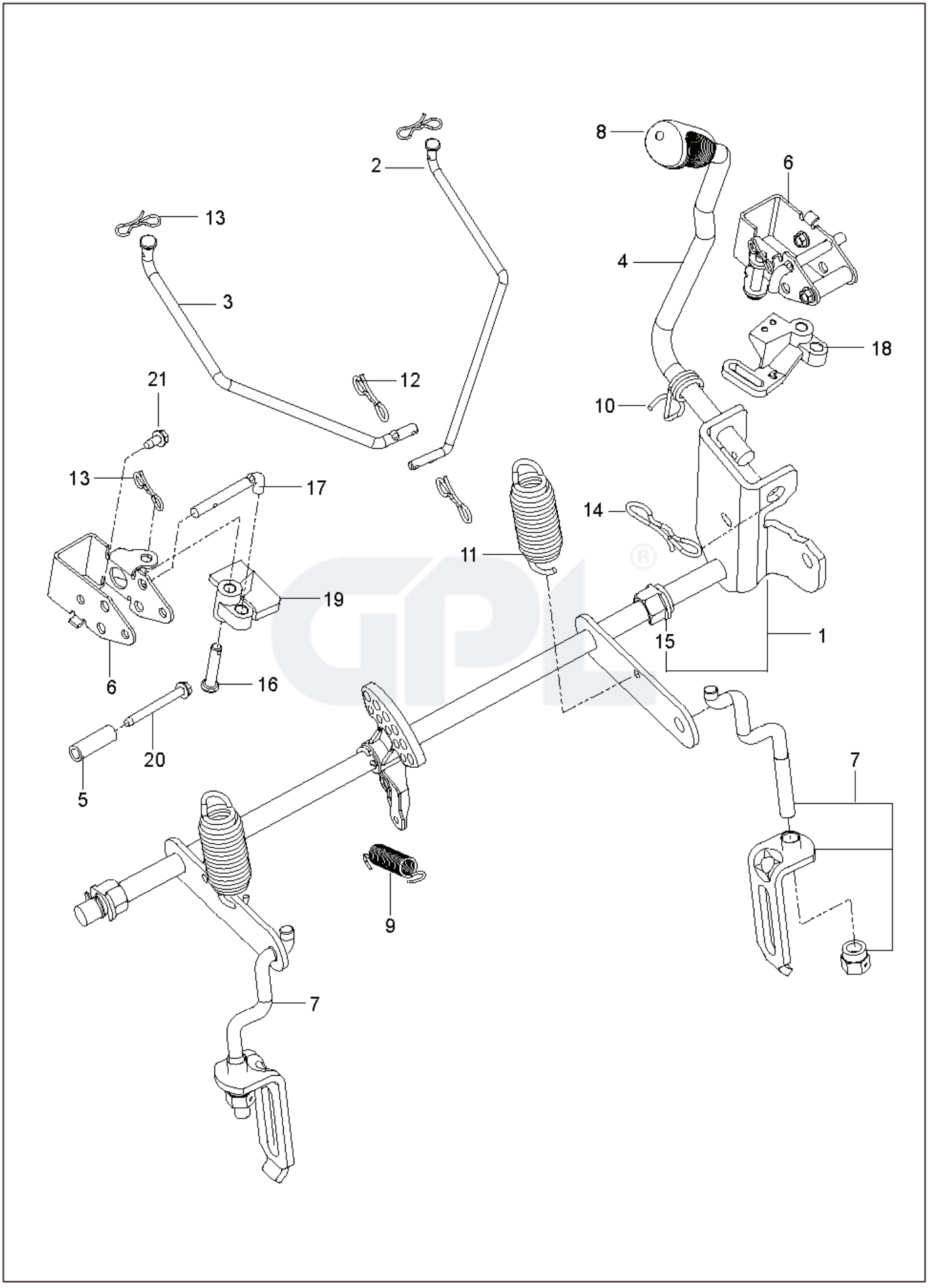
8
6
2
13
4
3
18
12
21
10
13
17
14
11
19
1
15
6
16
20
5
7
9
7

REF.	PART NO.	DESCRIPTION	REMARK	QTY.	KIT
1	587623101	SHAFT ASSY		1	15, 23
2	586457101	LINK		1	
3	586457201	LINK		1	
4	587622901	LIFTING LEVER ASSY		1	8, 10, 13
5	580486101	SPACER		2	
6	585682102	BRACKET		2	
7	587623001	LINK ASSY		2	22
8	532445060	LEVER		2	
9	586867601	SPRING		1	
10	532196314	SPRING		1	
11	539118762	SPRING		1	
12	587225301	PIN		4	
13	532194209	SPRING		1	
14	532194208	PIN		2	
15	510184901	BUSHING		2	
16	585701401	PIN		2	
17	586457501	BELLCRANK		1	
18	586457401	BELLCRANK		1	
19	586457501	BELLCRANK		1	
20	586561301	SCREW		2	
21	532137729	SCREW		2	

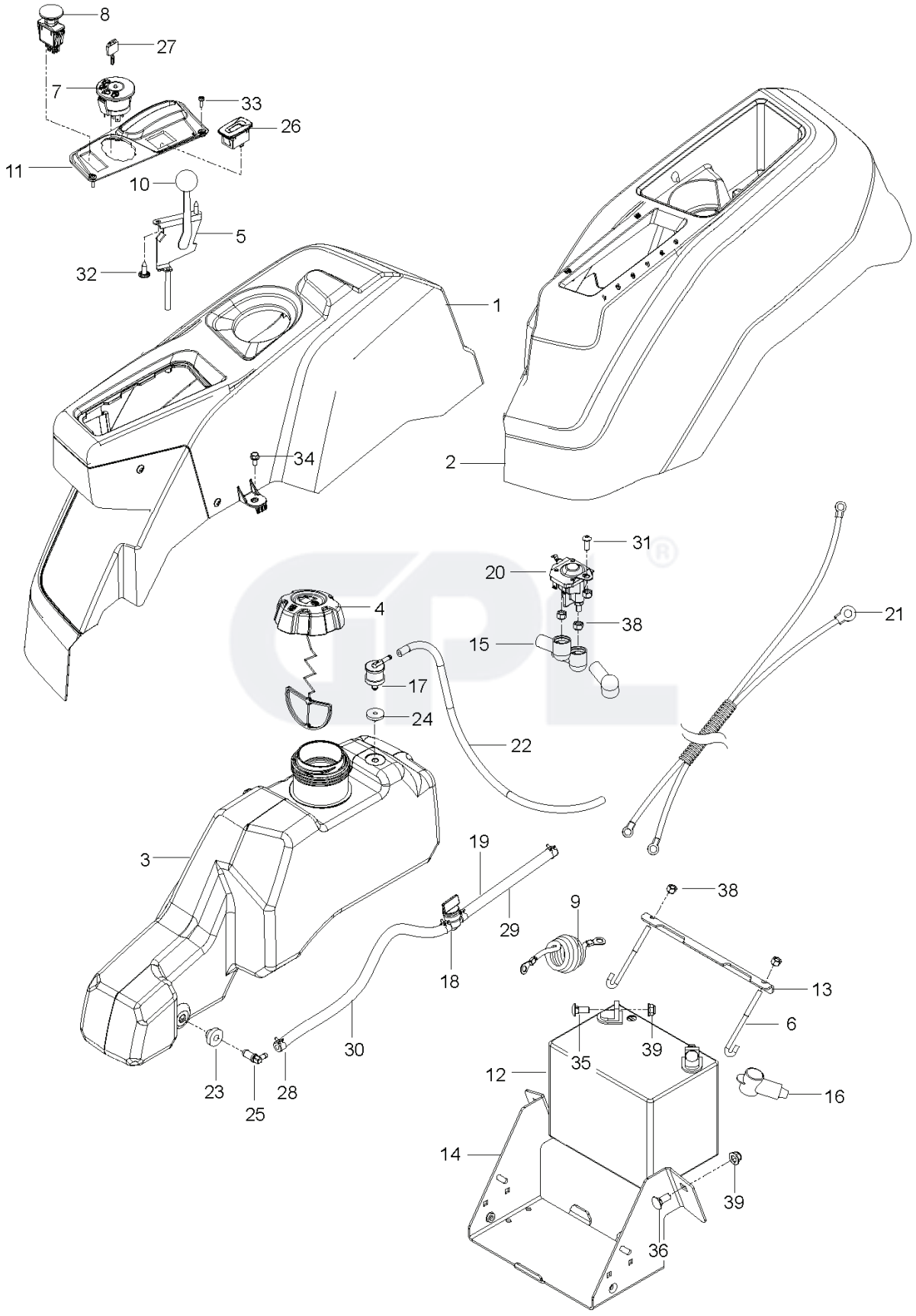
8
27
7
33
26
11
10
5
32
1
2
34
31
20
38
4
15
21
17
24
22
3
19
9
38
29
18
13
6
30
35
39
12
16
23
28
25
14
39
36

REF.	PART NO.	DESCRIPTION	REMARK	QTY.	KIT
1	585522801	CONSOLE ASSY		1	
2	586621201	CONSOLE ASSY		1	
3	589924701	FUEL TANK ASSY	Fits 2.75" filler neck	1	
4	585124801	FUEL CAP ASSY	Fits 2.75" filler neck	1	23, 24, 25
4	529989702	CAP	Fits 2.00" filler neck	1	
5	585974902	CABLE		1	
6	588839401	HOOK		2	
7	539107541	IGNITION SWITCH		1	
8	582107602	SWITCH		1	
9	586108201	HARNESS		1	
10	539133049	KNOB ROUND BALL		1	
11	585522703	CONTROL PANEL		1	
12	539102436	BATTERY		1	
13	510030003	BRACKET		1	
14	582609602	BOX		1	
15	532131563	COVER		3	
16	539102759	INSULATOR		1	
17	576618101	TANK VENT		1	
18	539916325	VALVE		1	
19	586123904	FUEL HOSE		1	18, 29, 30, 31
20	582042801	SOLENOID		1	
21	587198601	HARNESS		1	
22	587044518	HOSE		1	
23	532003645	BUSHING		1	
24	532437492	GROMMET		1	
25	532139277	NIPPLE		1	
26	586161801	HOUR METER		1	
27	532140401	KEY		1	
28	532123487	HOSE CLAMP		4	
29	587044810	HOSE		1	
30	587044818	HOSE		1	
31	539111229	SCR 1/4–20 X 5/8 BTN SKT HD ZD		1	
32	532141841	SCREW		2	
33	545227101	SCREW		2	
34	817490408	SCREW		2	
35	872140506	BOLT		2	
36	539990645	BOLT		2	
37	521996501	NUT		2	
38	539976978	NUT		5	
39	539112899	NUT, 5/16–18, NYLOC		2	
	586337301	HARNESS	NOT SHOWN	1	
	532109748	RELAY	NOT SHOWN	1	
	505280001	TIE WRAP	NOT SHOWN	1	

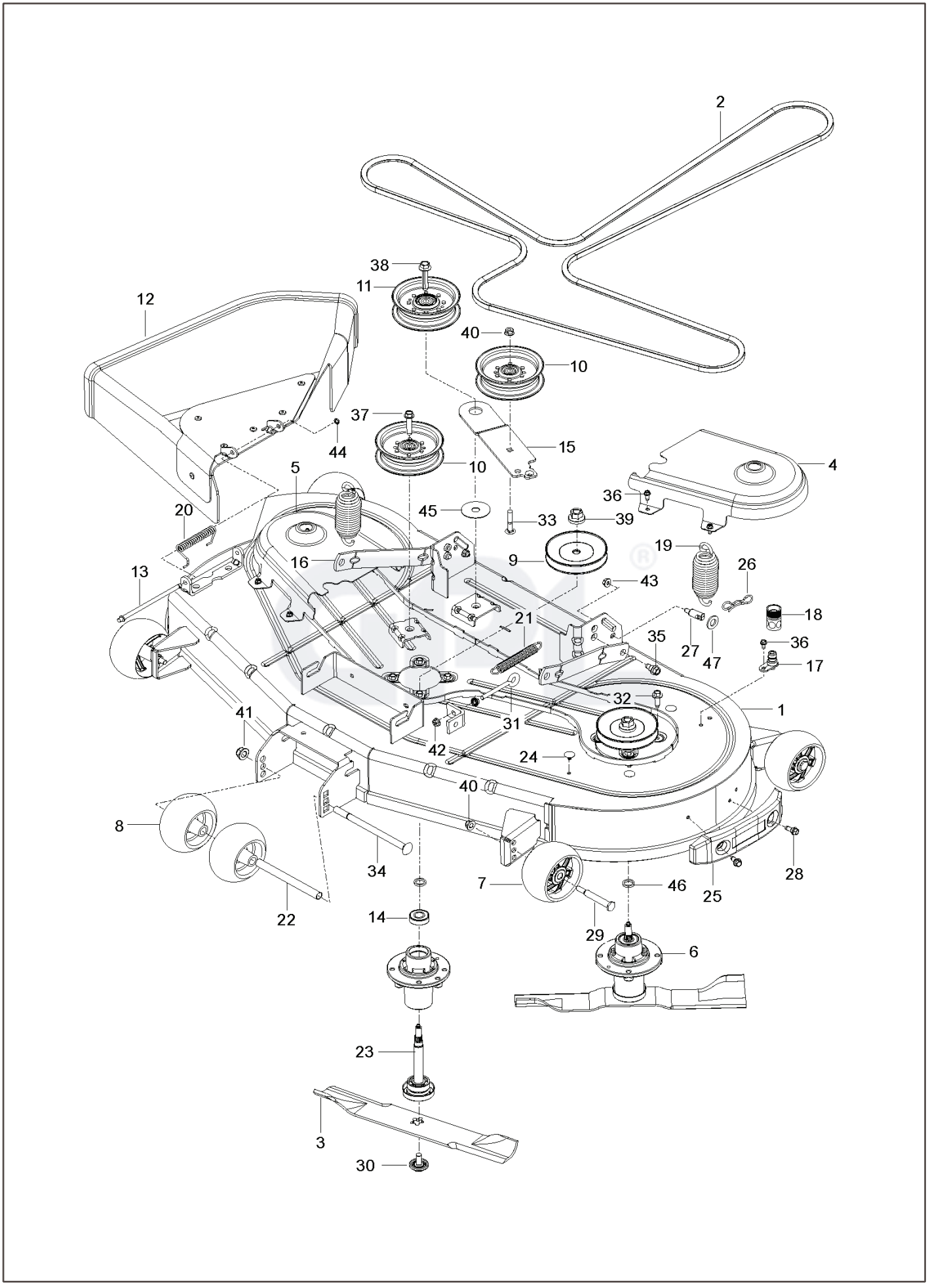
2
38
11
12
40
10
37
44
15
10
4
5
36
20
45
33
39
19
16
9
26
13
43
18
21
35
27
47
36
17
32
1
41
31
42
24
40
8
34
7
46
25
28
22
14
29
6
23
3
30

REF.	PART NO.	DESCRIPTION	REMARK	QTY.	KIT
1	582359102	DECK SHELL ASSY		1	
2	592951801	BELT		1	
3	582760501	BLADE		3	
4	590304403	COVER		1	
5	590304203	COVER		1	
6	539131898	SPINDLE		3	14, 23
7	589527301	WHEEL		4	
8	574169601	ROLLER		2	
9	532175708	PULLEY ASSY		3	
10	532197379	PULLEY		2	
11	532197380	PULLEY		1	
12	590632201	DEFLECTOR ASSY		1	
13	532131491	SHAFT		1	
14	532110485	BEARING		1	
15	582219602	ARM		1	
16	587140502	ARM		2	
17	532415598	HOSE COUPLING		1	
18	532416405	COUPLING		1	
19	539118762	SPRING		2	
20	587354701	SPRING		1	
21	587358401	SPRING		1	
22	574196501	TUBE		1	
23	532187291	SHAFT		1	
24	589813301	PLUG		3	
25	590732501	BUMPER ASSY		1	
26	532194209	SPRING		2	
27	532195161	STUD		2	
28	532170165	BOLT		2	
29	532193406	BOLT		4	
30	532193003	SCREW		3	
31	539115574	EYE BOLT		1	
32	584953901	BOLT		12	
33	872110616	BOLT		1	
34	872140864	BOLT		1	
35	532196539	BOLT		2	
36	532137729	SCREW		9	
37	817490628	SCREW		1	
38	588438301	SCREW		1	
39	532400234	NUT		3	
40	873900600	NUT		5	
41	521991101	NUT		1	
42	539990585	NUT		2	
43	873900500	NUT		2	
44	532110452	NUT		1	
45	532178515	WASHER		1	
46	532187690	WASHER		3	
47	819191912	WASHER		2	