Z254F, 96784490102, 2020-08

SPARE PARTS LIST

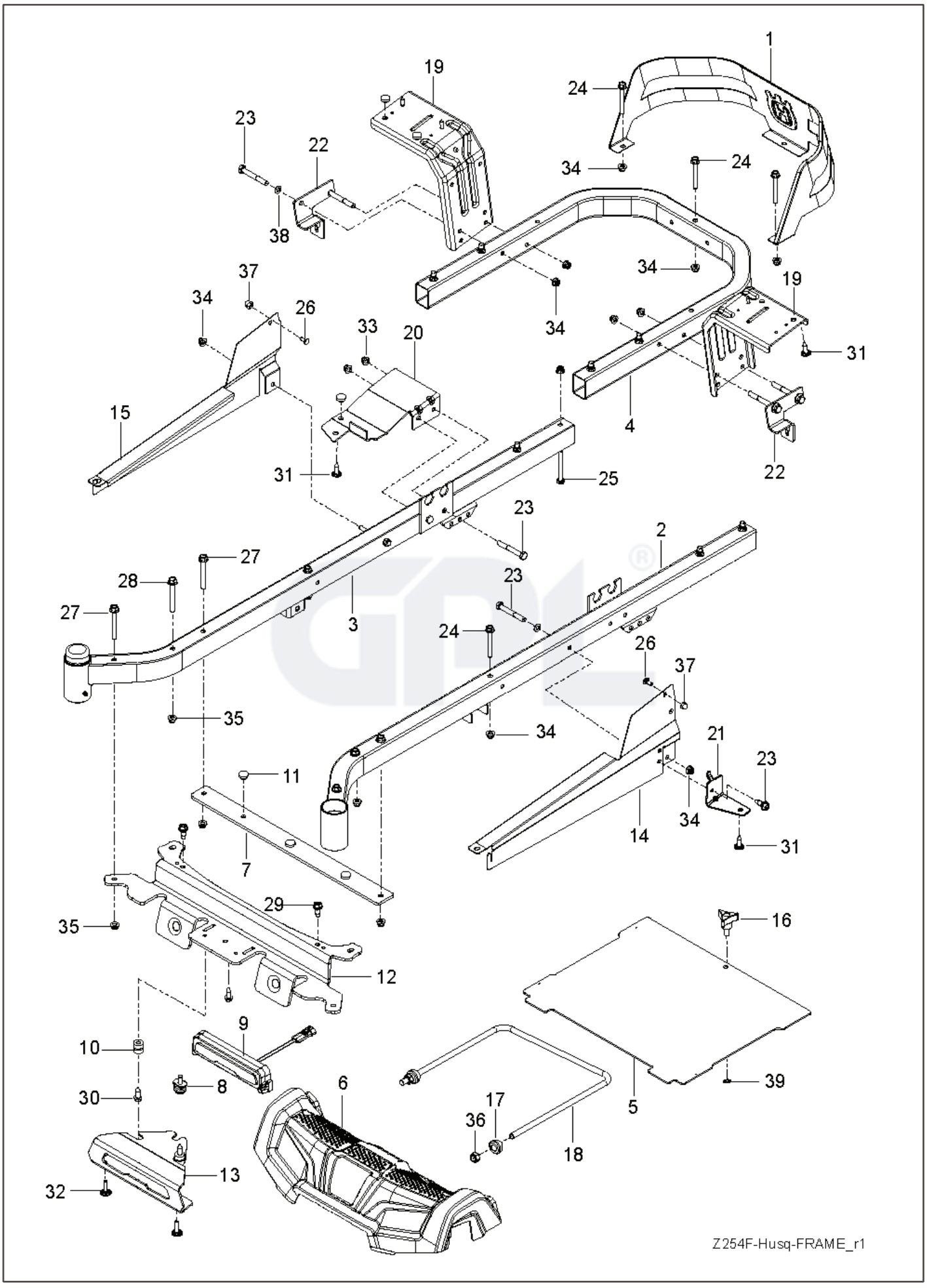
1
19
24
23
22
34
24
38
37
34
26
33
20
34
19
31
15
4
31
25
22
23
2
27
28
27
3
23
24
26
37
35
34
21
23
11
14
34
31
7
29
16
35
12
9
10
39
30
8
6
5
17
36
18
13
32
Z254F-Husq-FRAME_r1

REF.	PART NO.	DESCRIPTION	REMARK	QTY.	KIT
1	585039802	GUARD		1	
2	589283402	FRAME TUBE		1	
3	589283302	FRAME TUBE		1	
4	584991002	TUBE		1	
5	598712401	PLATE KIT		1	
6	586703801	FRONT COVER		1	
7	585523004	SUPPORT		1	
8	587546901	SCREW		1	
9	585916701	LIGHT		1	
10	587225201	GROMMET		2	
11	585989301	BUMPER		7	
12	585523104	CROSS MEMBER		1	
13	587458602	BRACKET		1	
14	585331602	COVER		1	
15	585331502	COVER		1	
16	539104411	KNOB		1	
17	532195263	BUSHING		2	
18	521938101	LINK		1	
19	580501302	BRACKET		2	
20	585523404	SUPPORT		1	
21	585523604	SUPPORT		1	
22	585474302	BRACKET		2	
23	874780536	BOLT		7	
24	874780544	BOLT		5	
25	874780648	BOLT		8	
26	585940001	BOLT		2	
27	577117701	SCREW		4	
28	586654301	BOLT		2	
29	586881101	BOLT		2	
30	817580520	BOLT		2	
31	532416358	SCREW		6	
32	532421756	SCREW		2	
33	873900500	NUT		2	
34	539112899	NUT, 5/16–18, NYLOC		9	
35	521996501	NUT		8	
36	539119124	NUT		2	
37	585938101	NUT		2	
38	819111116	WASHER		6	
39	532423063	WASHER		1	

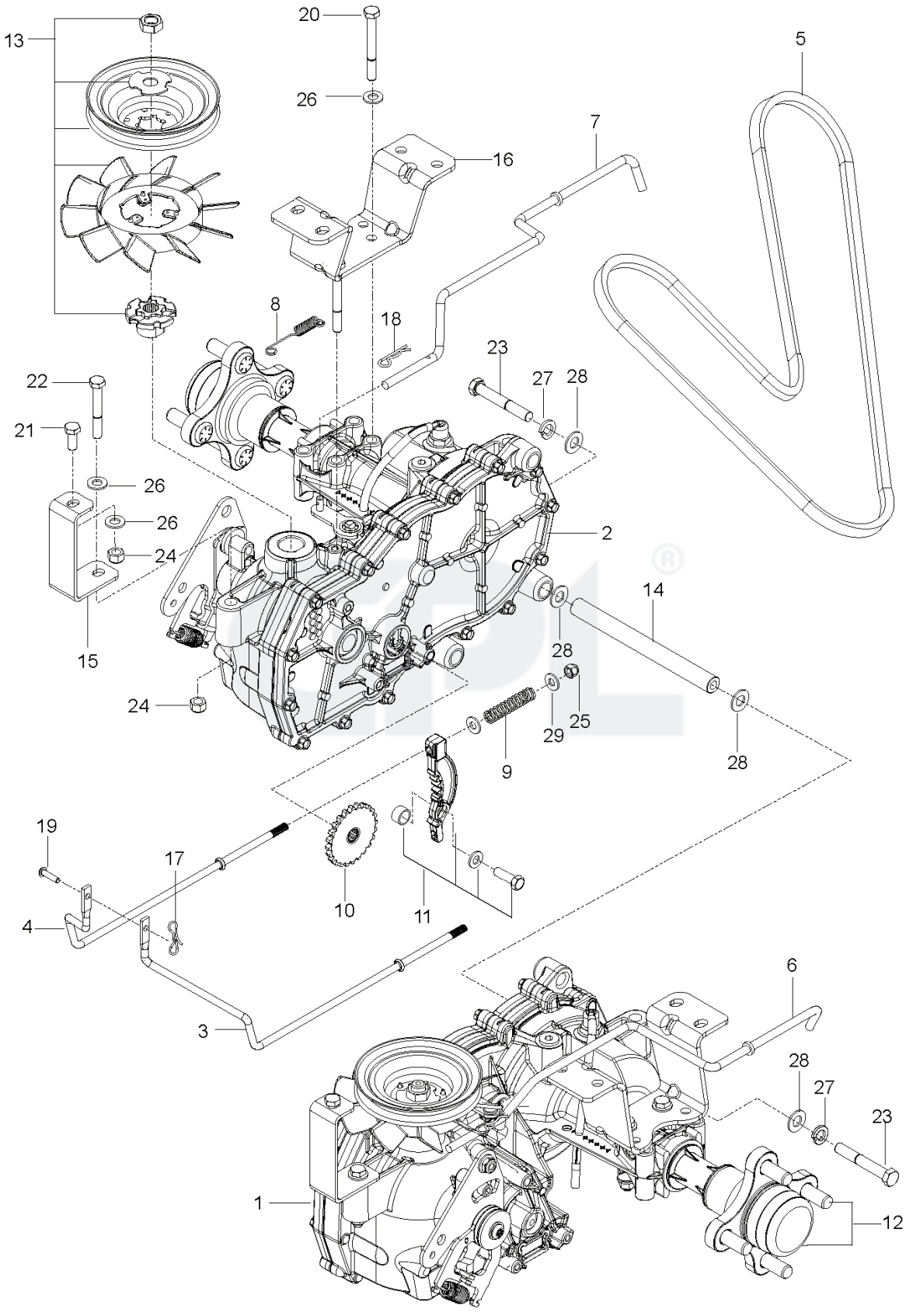
13
20
26
5
7
16
8
18
23
27
28
22
21
26
26
24
2
14
28
15
24
28
29
25
9
28
19
17
10
11
4
3
6
28
27
23
1
12

REF.	PART NO.	DESCRIPTION	REMARK	QTY.	KIT
1	510375601	TRANSMISSION		1	
2	510375602	TRANSMISSION		1	
3	574030501	LINKAGE		1	
4	574030502	LINKAGE		1	
5	539110411	BELT		1	
6	585474401	ROD		1	
7	585474501	ROD		1	
8	586665101	SPRING		2	
9	539110342	SPRING		2	
10	539120080	DISC		2	
11	539120079	ARM		2	
12	575507001	KIT		1	
13	501403602	TRANSMISSION KIT		2	
14	510184104	SPACING TUBE		2	
15	580806502	SUPPORT		2	
16	580806602	BRACKET		2	
17	587225301	PIN		1	
18	539976988	PIN		4	
19	587115301	PEN		1	
20	874780544	BOLT		4	
21	539976934	SCREW		2	
22	874780536	BOLT		2	
23	539990637	SCREW		4	
24	873800500	LOCK NUT		8	
25	539976978	NUT		2	
26	819111116	WASHER		16	
27	539990118	WASHER		4	
28	819131316	WASHER		8	
29	819091016	WASHER		4	

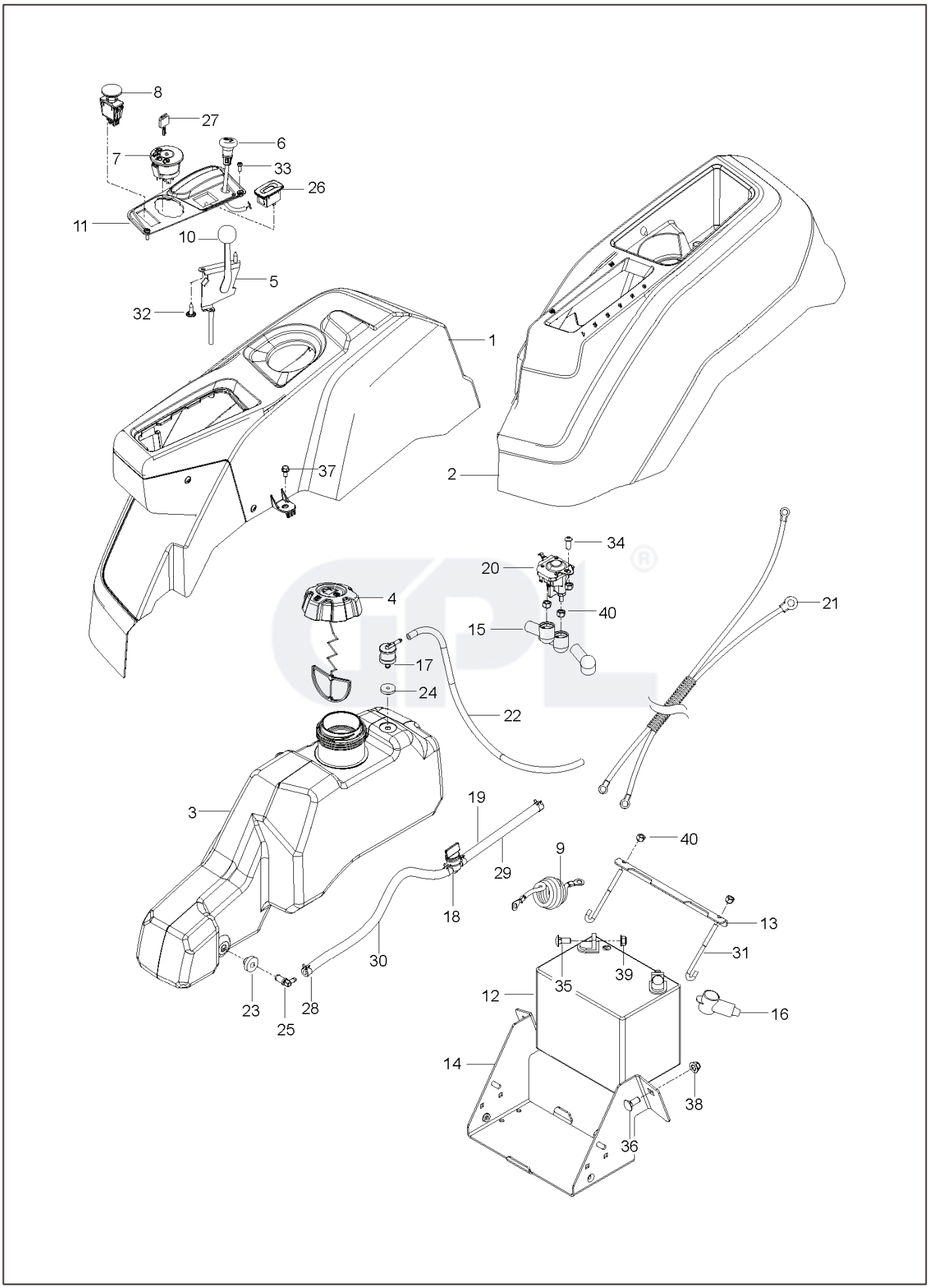
8
27
6
7
33
26
11
10
5
32
1
37
2
34
20
4
40
21
15
17
24
22
3
19
40
9
29
18
13
30
31
39
35
12
16
23
28
25
14
38
36

REF.	PART NO.	DESCRIPTION	REMARK	QTY.	KIT
1	585522801	CONSOLE ASSY		1	
2	586621201	CONSOLE ASSY		1	
3	589924702	FUEL TANK ASSY		1	23, 24, 25
4	585124801	FUEL CAP ASSY		1	
5	539102732	THROTTLE		1	
6	586881502	CHOKE CONTROL ASSY		1	
7	539107541	IGNITION SWITCH		1	
8	582107602	SWITCH		1	
9	586108201	HARNESS		1	
10	539133049	KNOB ROUND BALL		1	
11	585522701	CONTROL PANEL		1	
12	539102463	BATTERY		1	
13	510030003	BRACKET		1	
14	582609602	BOX		1	
15	532131563	COVER		3	
16	539102759	INSULATOR		1	
17	576618101	TANK VENT		1	
18	539916325	VALVE		1	
19	586123904	FUEL HOSE		1	18, 28, 29, 30
20	582042801	SOLENOID		1	
21	587198601	HARNESS		1	
22	587044529	HOSE		1	
23	532003645	BUSHING		1	
24	532437492	GROMMET		1	
25	532139277	NIPPLE		1	
26	586161801	HOUR METER		1	
27	532411933	KEY		1	
28	532123487	HOSE CLAMP		4	
29	587044810	HOSE		1	
30	587044803	HOSE		1	
31	588839401	HOOK		2	
32	532141841	SCREW		2	
33	545227101	SCREW		2	
34	539111229	SCR 1/4–20 X 5/8 BTN SKT HD ZD		1	
35	539990316	BOLT		2	
36	539990645	BOLT		2	
37	817490408	SCREW		2	
38	521996501	NUT		2	
39	539112899	NUT, 5/16–18, NYLOC		2	
40	539976978	NUT		5	
	532109748	RELAY	NOT SHOWN	1	
	505280001	TIE WRAP	NOT SHOWN	1	
	586337301	HARNESS	NOT SHOWN	1	
	586548101	HARNESS		1	

*OPTIONAL

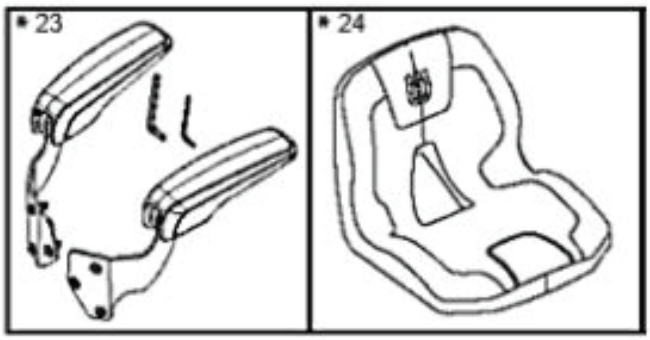
* 23
* 24

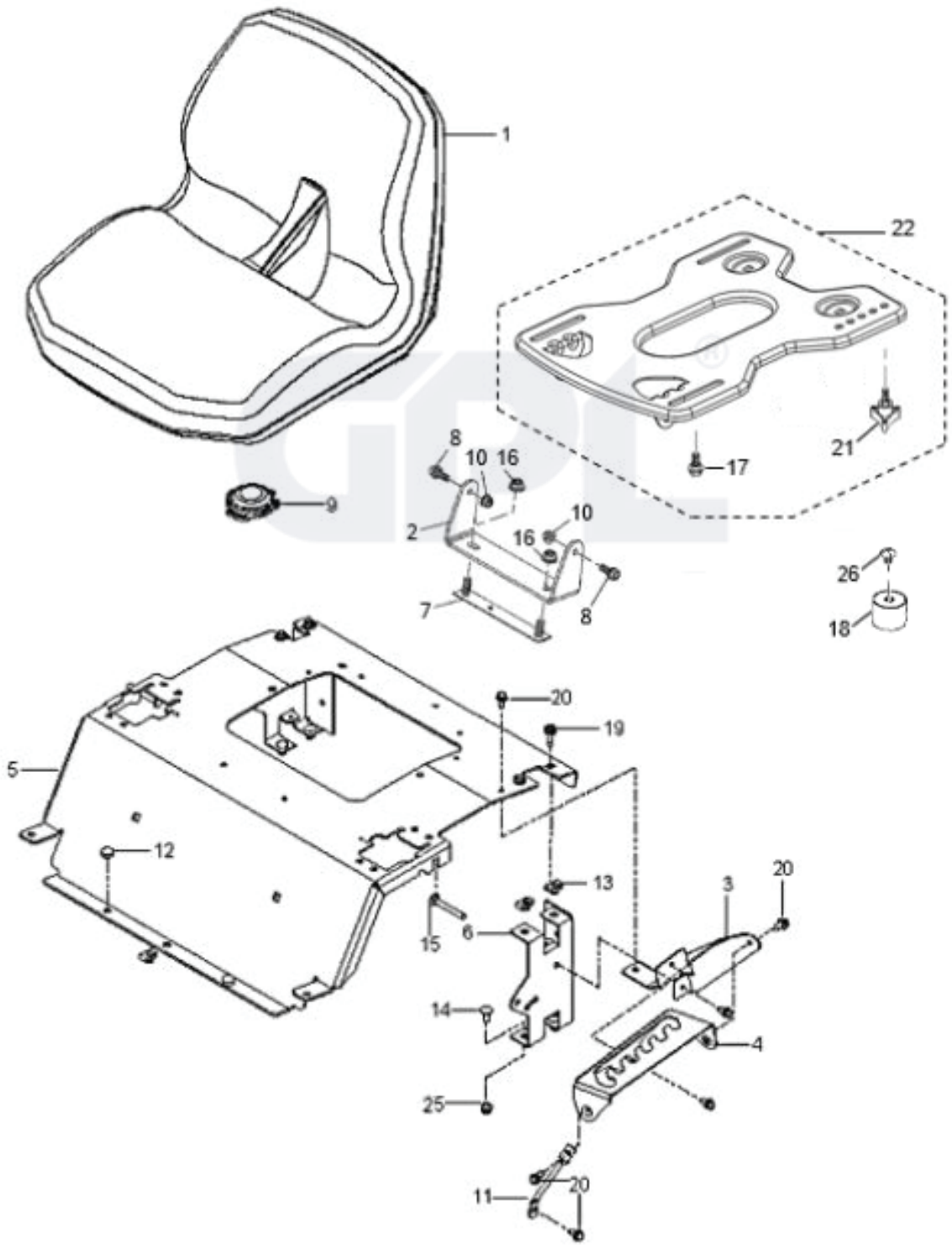
1
22
21
17
8
10
16
9
2
10
16
7
8
26
18
20
19
5
12
13
3
20
15
6
14
4
25
11
20

REF.	PART NO.	DESCRIPTION	REMARK	QTY.	KIT
1	597658101	SEAT		1	
2	597330002	BRACKET		1	
3	586220802	SUPPORT PLATE		1	
4	586221202	PLATE		1	
5	597160003	PLATE		1	
6	580308202	SUPPORT		1	
7	590777602	BRACKET		1	
8	596240701	BOLT		2	
9	532192749	SWITCH.SEAT.DP W/RAMPS		1	
10	594944401	NUT		2	
11	586428601	SUPPORT LEG		1	
12	585989301	BUMPER		2	
13	539104763	CLIP		5	
14	539990316	BOLT		4	
15	510422701	SCREW		2	
16	521996502	NUT		2	
17	597781801	BOLT		2	
18	597553401	BUMPER		2	
19	874490512	BOLT		4	
20	817000510	BOLT		6	
21	597783101	KNOB		2	
22	598001601	SERVICE KIT		1	
23	597658203	SERVICE KIT		1	
24	597959401	COVER		1	
25	539112899	NUT, 5/16–18, NYLOC		4	
26	597869301	BOLT		2	

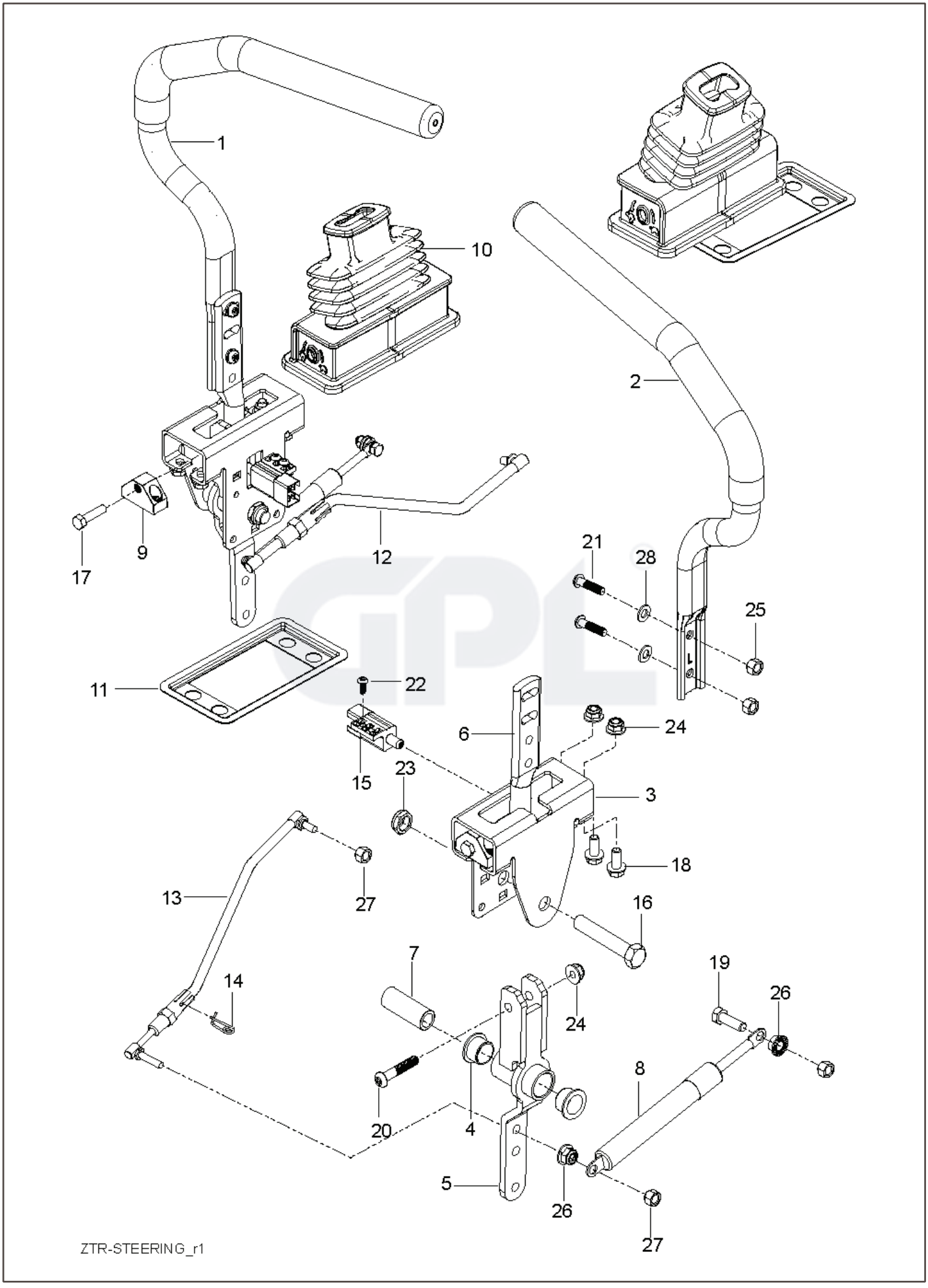
1
10
2
9
17
12
21
28
25
11
22
6
24
15
23
3
18
13
27
16
7
14
19
26
24
20
4
8
5
26
27
ZTR-STEERING_r1

REF.	PART NO.	DESCRIPTION	REMARK	QTY.	KIT
1	590090803	TUBE		1	
2	590090804	TUBE		1	
3	585124705	BRACKET		2	
4	539131518	BEARING		4	
5	576140301	LEVER		2	
6	587601702	LEVER		2	
7	584927201	SPACER		2	
8	539102720	GAS SPRING		2	
9	581437501	BLOCK		2	
10	585831601	BOOT		2	
11	585488202	FLANGE		2	
12	588604901	ROD		2	14
13	588605001	ROD		2	14
14	532199849	SPRING RETAINER		2	
15	587601501	SWITCH		2	
16	874780844	BOLT		2	
17	585986101	BOLT		2	
18	874490512	BOLT		8	
19	539990209	SCREW		2	
20	587885301	SCREW		2	
21	585985901	BOLT		4	
22	586936001	SCREW		2	
23	539108010	NUT		2	
24	539112899	NUT, 5/16–18, NYLOC		10	
25	585986001	NUT		4	
26	539990585	NUT		4	
27	873800500	LOCK NUT		4	
28	819111116	WASHER		4	

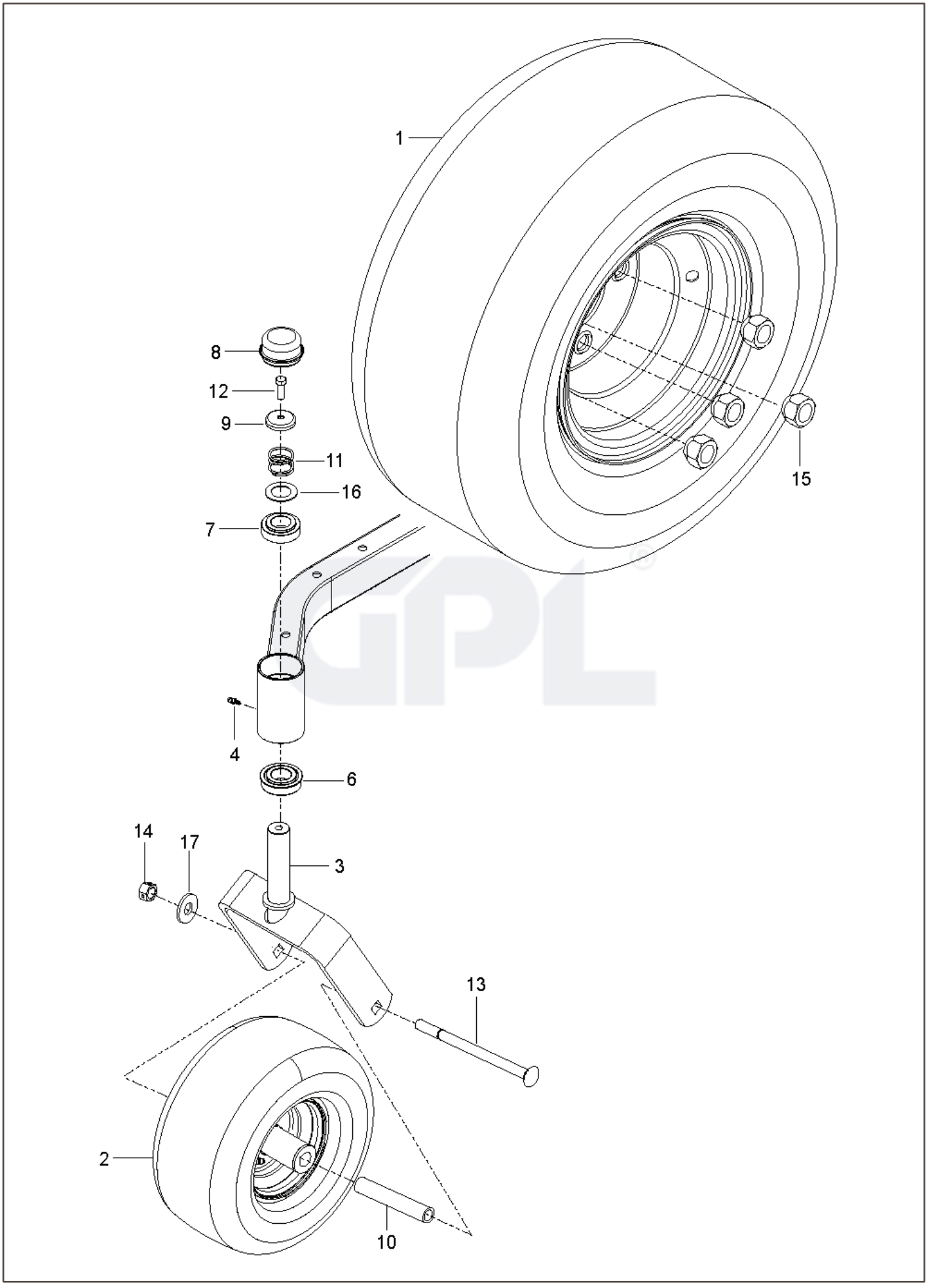
1
8
12
9
11
16
7
15
4
6
14
17
3
13
2
10

REF.	PART NO.	DESCRIPTION	REMARK	QTY.	KIT
1	590486601	WHEEL		2	
2	576588602	WHEEL ASSY		2	
3	586650302	YOKE		2	
4	539115638	FITTING		2	
6	539112660	BEARING		2	
7	539117901	BUSHING		2	
8	539102535	CAP		2	
9	539115749	CASTER PLUG		2	
10	585995401	SPACER		2	
11	539115747	SPRING		2	
12	874950516	SCREW		2	
13	576601501	SCREW		2	
14	873930800	NUT		2	
15	587653902	NUT		8	
16	539115675	WASHER		2	
17	819182212	WASHER		2	

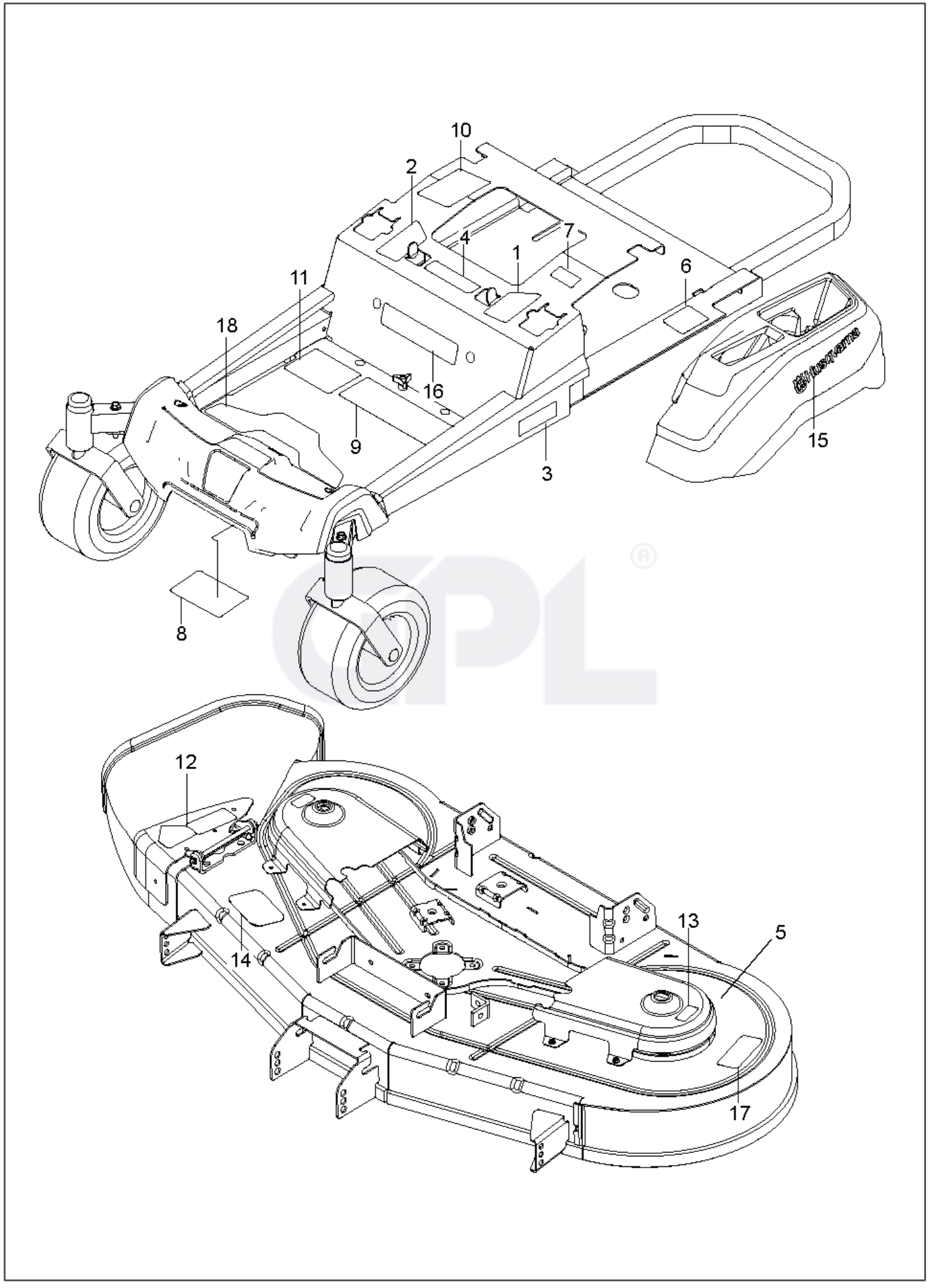
10
2
4
7
1
6
11
18
16
9
3
15
8
12
14
13
5
17

REF.	PART NO.	DESCRIPTION	REMARK	QTY.	KIT
1	587595601	DECAL		1	
2	587595501	DECAL		1	
3	592869901	DECAL		2	
4	539105745	DECAL		1	
5	592898301	DECAL		1	
6	539108385	DECAL		1	
7	539108386	DECAL		1	
8	539109897	DECAL		1	
9	590485501	DECAL		1	
10	532423829	DECAL		1	
11	588035101	DECAL	START NO CHOKE	1	
12	586978801	DECAL		1	
13	589357901	DECAL		1	
14	591163901	DECAL		1	
15	577469001	DECAL		2	
16	591357301	DECAL		1	
17	593808801	DECAL		1	
18	587000701	PAD		1	

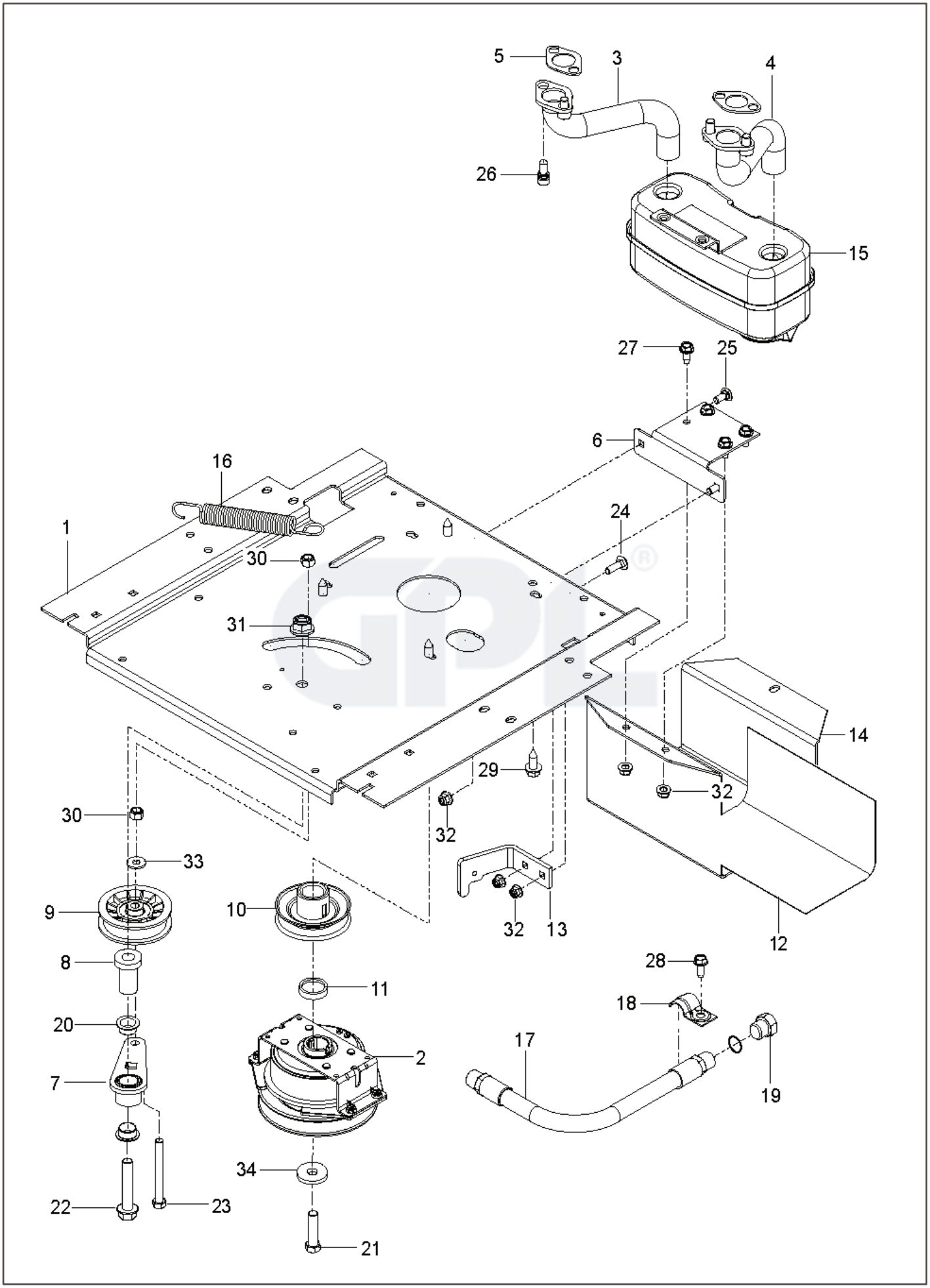
5
3
4
26
15
27
25
6
16
24
1
30
31
14
29
32
32
30
33
9
10
32
13
12
8
28
11
18
20
17
2
7
19
34
22
23
21

REF.	PART NO.	DESCRIPTION	REMARK	QTY.	KIT
1	593898602	PLATE		1	
2	587241601	CLUTCH		1	
3	583954801	TUBE		1	
4	583954501	TUBE		1	
5	532186054	GASKET MUFFLER		1	
6	581886702	BRACKET		1	
7	532448145	ARM		1	
8	582538901	SPINDLE		1	
9	539110311	PULLEY		1	
10	587537401	PULLEY		1	
11	587660101	SPACER		1	
12	539132859	HEAT SHIELD		1	
13	587633302	STOP		1	
14	587451202	GUARD		1	
15	539131604	MUFFLER ASSY		1	
16	532196105	SPRING		1	
17	584825501	HOSE ASSY		1	
18	539101363	CLAMP		1	
19	501603701	BEARING		2	
20	501603701	BEARING		1	
21	581332803	BOLT		1	
22	582539501	BOLT		1	
23	874520656	BOLT		2	
24	539990208	SCREW		2	
25	539990316	BOLT		4	
26	532183906	SCREW		1	
27	817490512	SCREW		4	
28	817490410	SCREW		4	
29	817120616	SCREW		2	
30	539976979	NUT		1	
31	521991101	NUT		5	
32	539112899	NUT, 5/16–18, NYLOC		1	
33	819121414	WASHER		1	
34	532126197	WASHER		1	
	589543901	INSTRUCTION		1	
	000000000	W/O DESCRIPTION	Engine, Kohler KT745 26 HP. For engine replacement parts, see a Kohler dealer.	1	

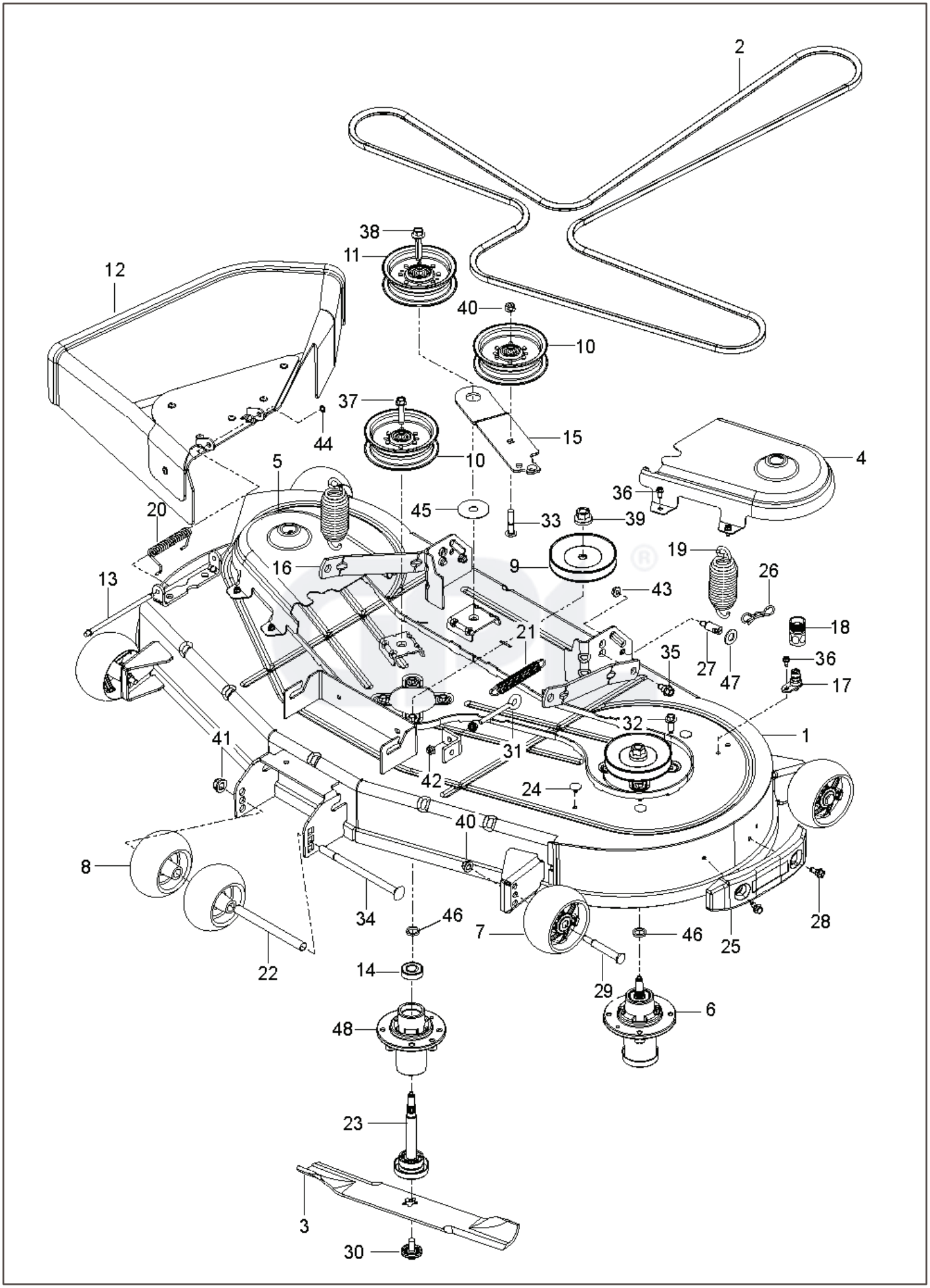
2
38
11
12
40
10
37
44
15
10
4
5
36
20
45
33
39
19
16
9
26
13
43
18
21
35
27
47
36
17
32
1
41
31
42
24
40
8
34
46
7
46
25
28
22
14
29
6
48
23
3
30

REF.	PART NO.	DESCRIPTION	REMARK	QTY.	KIT
1	582359102	DECK SHELL ASSY		1	
2	592951801	BELT		1	
3	582760501	BLADE		3	
4	590304403	COVER		1	
5	590304203	COVER		1	
6	539131898	SPINDLE		3	14, 23
7	589527301	WHEEL		4	
8	574169601	ROLLER		2	
9	532175708	PULLEY ASSY		3	
10	532197379	PULLEY		2	
11	532197380	PULLEY		1	
12	590632201	DEFLECTOR ASSY		1	
13	532131491	SHAFT		1	
14	532110485	BEARING		1	
15	582219602	ARM		1	
16	587140502	ARM		2	
17	532415598	HOSE COUPLING		1	
18	532416405	COUPLING		1	
19	539118762	SPRING		2	
20	587354701	SPRING		1	
21	587358401	SPRING		1	
22	574196501	TUBE		1	
23	532187291	SHAFT		1	
24	589813301	PLUG		3	
25	590732501	BUMPER ASSY		1	
26	532194209	SPRING		2	
27	532195161	STUD		2	
28	532170165	BOLT		2	
29	532193406	BOLT		4	
30	532193003	SCREW		3	
31	539115574	EYE BOLT		1	
32	584953901	BOLT		12	
33	872110616	BOLT		1	
34	872140864	BOLT		1	
35	532196539	BOLT		2	
36	532137729	SCREW		9	
37	817490628	SCREW		1	
38	588438301	SCREW		1	
39	532400234	NUT		3	
40	873900600	NUT		5	
41	521991101	NUT		1	
42	539990585	NUT		2	
43	873900500	NUT		2	
44	532110452	NUT		1	
45	532178515	WASHER		1	
46	532187690	WASHER		3	
47	819191912	WASHER		2	
48	539131767	MANDREL. HOUSING - CAST IRON		1	

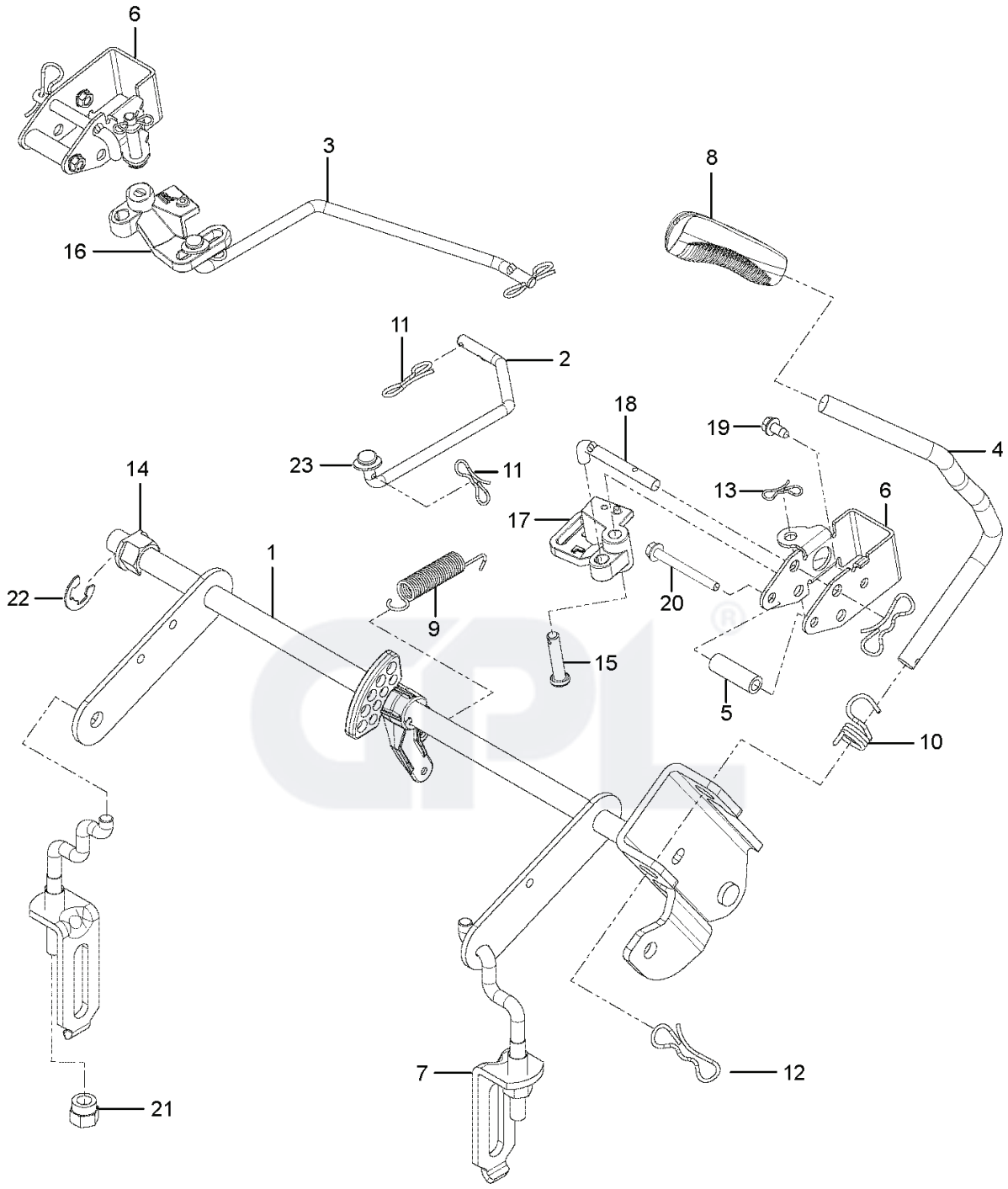
6
3
16
8
11
2
18
19
4
23
11
14
13
6
17
1
22
9
20
15
5
10
7
12
21

REF.	PART NO.	DESCRIPTION	REMARK	QTY.	KIT
1	586429702	SHAFT ASSY		1	14, 22
2	586457101	LINK		1	
3	586457201	LINK		1	
4	586428701	HANDLE		1	8, 10, 12
5	580486101	SPACER		2	
6	585682102	BRACKET		2	
7	587623001	LINK ASSY		2	21
8	580962301	GRIP		1	
9	586867601	SPRING		1	
10	532196314	SPRING		1	
11	587225301	PIN		2	
12	532194209	SPRING		3	
13	532194208	PIN		2	
14	510184901	BUSHING		2	
15	585701401	PIN		2	
16	586457501	BELLCRANK	RIGHT	1	
17	586457401	BELLCRANK	LEFT	1	
18	585682001	ROD		2	
19	532137729	SCREW		2	
20	586561301	SCREW		2	
21	532175994	NUT		2	
22	812000002	RETAINER RING		1	
23	819131316	WASHER		2	

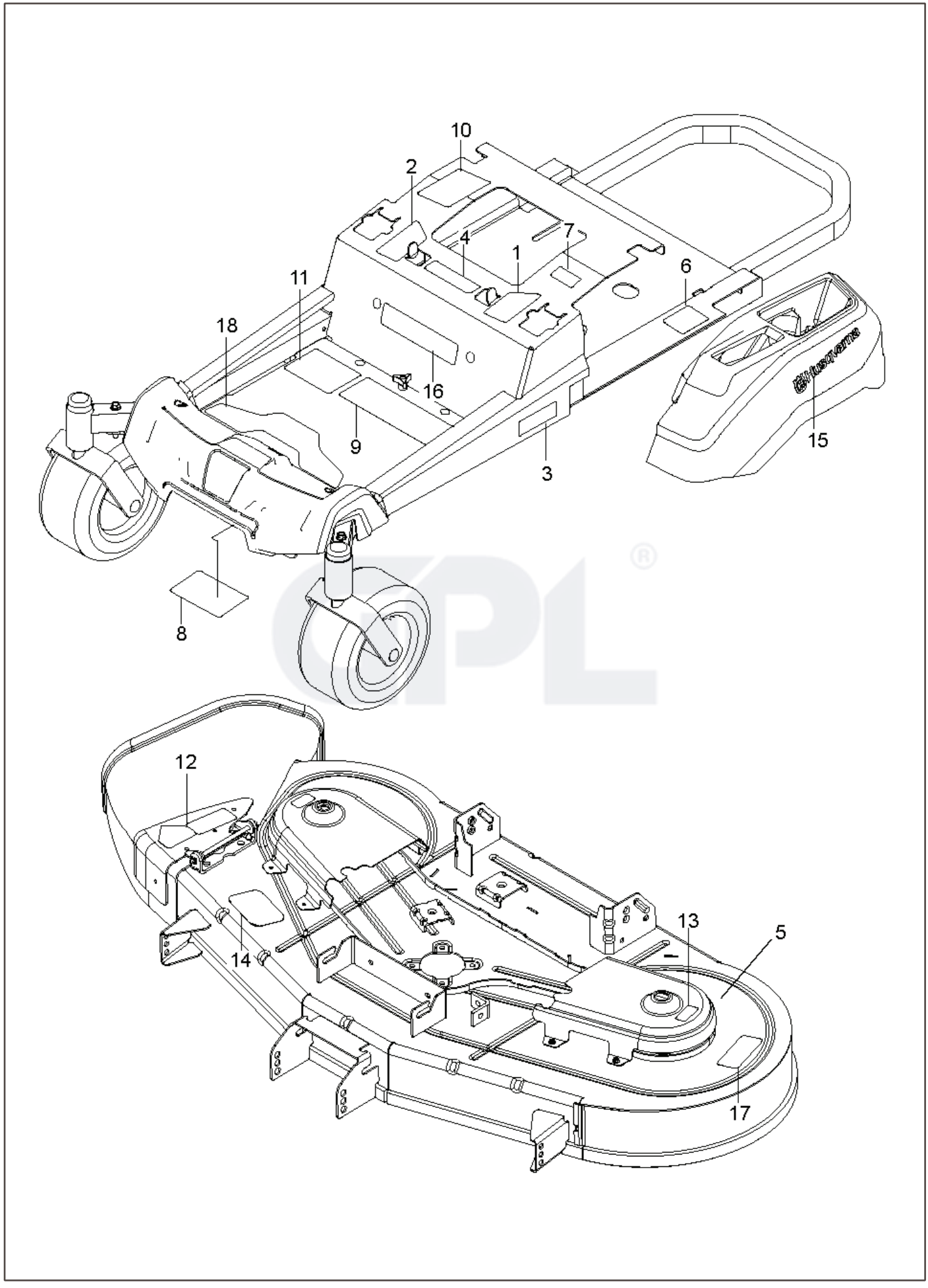
10
2
4
7
1
6
11
18
16
9
3
15
8
12
14
13
5
17

REF.	PART NO.	DESCRIPTION	REMARK	QTY.	KIT
1	587595601	DECAL		1	
2	587595501	DECAL		1	
3	592869901	DECAL		2	
4	539105745	DECAL		1	
5	592898301	DECAL		1	
6	539108385	DECAL		1	
7	539108386	DECAL		1	
8	539109897	DECAL		1	
9	590485501	DECAL		1	
10	532423829	DECAL		1	
11	588035101	DECAL	START NO CHOKE	1	
12	586978801	DECAL		1	
13	589357901	DECAL		1	
14	591163901	DECAL		1	
15	577469001	DECAL		2	
16	591357301	DECAL		1	
17	593808801	DECAL		1	
18	587000701	PAD		1	

For 967844901-00, 96784490101, 96795400100, 967954001-01, 96784490102

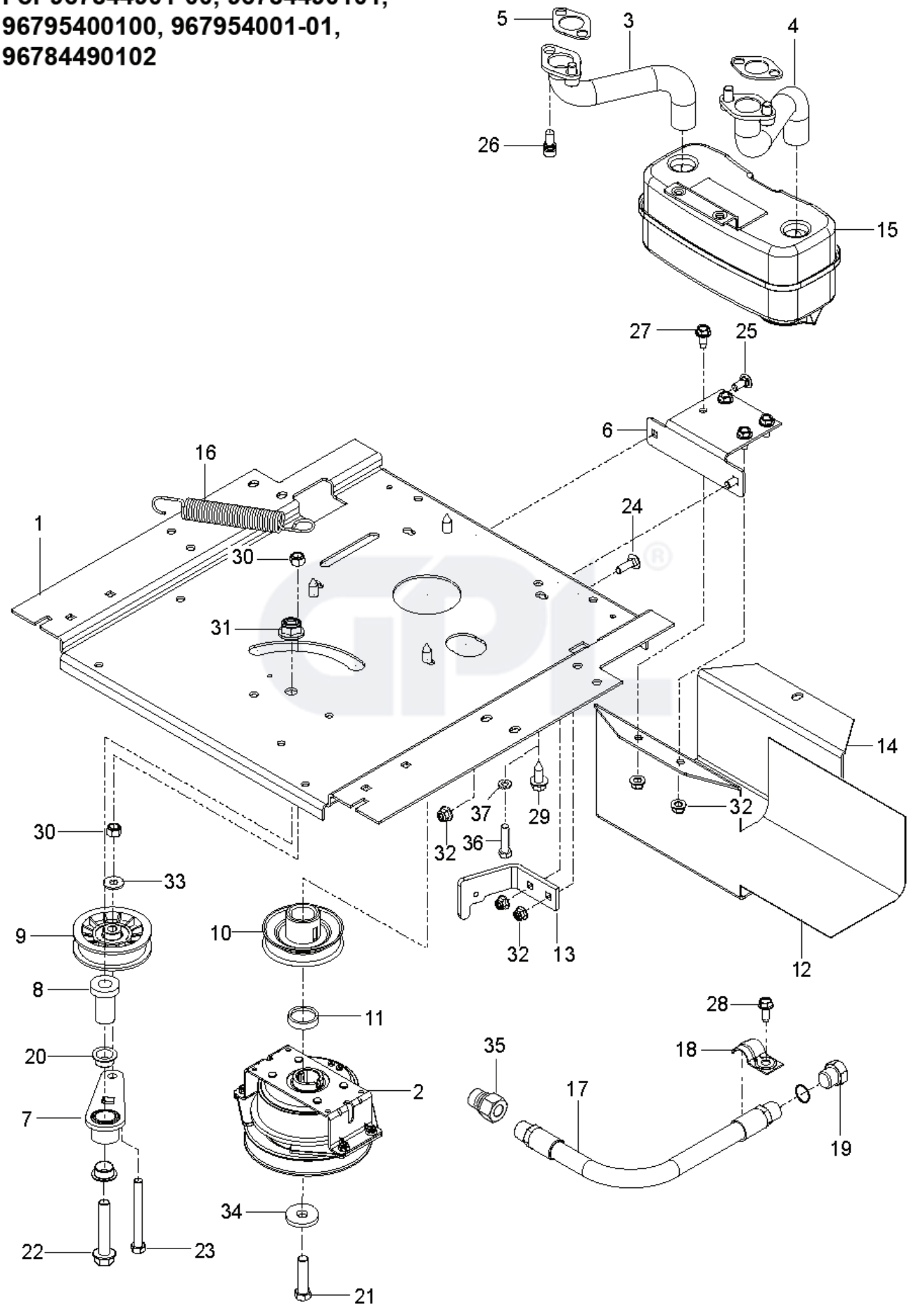

REF.	PART NO.	DESCRIPTION	REMARK	QTY.	KIT
1	588017102	PLATE	For 967844901–00	1	
1	593898602	PLATE	For 96784490101, 96795400100, 967954001–01, 96784490102	1	
2	587241601	CLUTCH		1	
3	583954801	TUBE	For 967844901–00, 96784490101, 96784490102	1	
3	583955701	TUBE	For 96795400100, 967954001–01	1	
4	583954501	TUBE	For 967844901–00, 96784490101, 96784490102	1	
4	583955601	TUBE	For 96795400100, 967954001–01	1	
5	532186054	GASKET MUFFLER	For 967844901–00, 96784490101, 96784490102	1	
6	581886702	BRACKET		1	
7	532448145	ARM		1	
8	582538901	SPINDLE		1	
9	539110311	PULLEY		1	
10	587537401	PULLEY		1	
11	587660101	SPACER		1	
12	539132859	HEAT SHIELD		1	
13	587633302	STOP		1	
14	587451202	GUARD		1	
15	539131604	MUFFLER ASSY		1	
16	532196105	SPRING		1	
17	584825501	HOSE ASSY		1	
18	539101363	CLAMP		1	
19	585807101	PLUG	For 967844901–00, 96795400100, 967954001–01	2	
19	501603701	BEARING	For 96784490101, 96784490102	2	
20	501603701	BEARING	For 96784490101, 96784490102	1	
21	581332803	BOLT		1	
22	582539501	BOLT		1	
23	874520656	BOLT		2	
24	539990208	SCREW		2	
25	539990316	BOLT		4	
26	596134201	SCREW	For 967844901–00	1	
26	532183906	SCREW	For 96784490101, 96784490102	1	
27	817490512	SCREW		4	
28	817490410	SCREW		4	
29	817120616	SCREW	For 967844901–00, 96784490101, 96784490102	2	
30	539976979	NUT		1	
31	521991101	NUT		5	
32	539112899	NUT, 5/16–18, NYLOC		1	
33	819121414	WASHER		1	
34	532126197	WASHER		1	
35	522599001	ADAPTER	For 96795400100, 967954001–01	1	
36	874780620	BOLT	For 96795400100, 967954001–01	4	
37	539990118	WASHER	For 96795400100, 967954001–01	4	
	589543901	INSTRUCTION	For 96784490101, 96784490102	1	
	000000000	W/O DESCRIPTION	For 967844901–00, 96784490101, 96784490102. Engine, Kohler KT745 26 HP. For engine replacement parts, see a Kohler dealer.	1	
	532178151	MUFFLER GASKET	For 96795400100, 967954001–01. NOT SHOWN.	2	
	532184362	NUT	For 96795400100, 967954001–01	1	
	539108120	NUT	For 96795400100, 967954001–01	1	

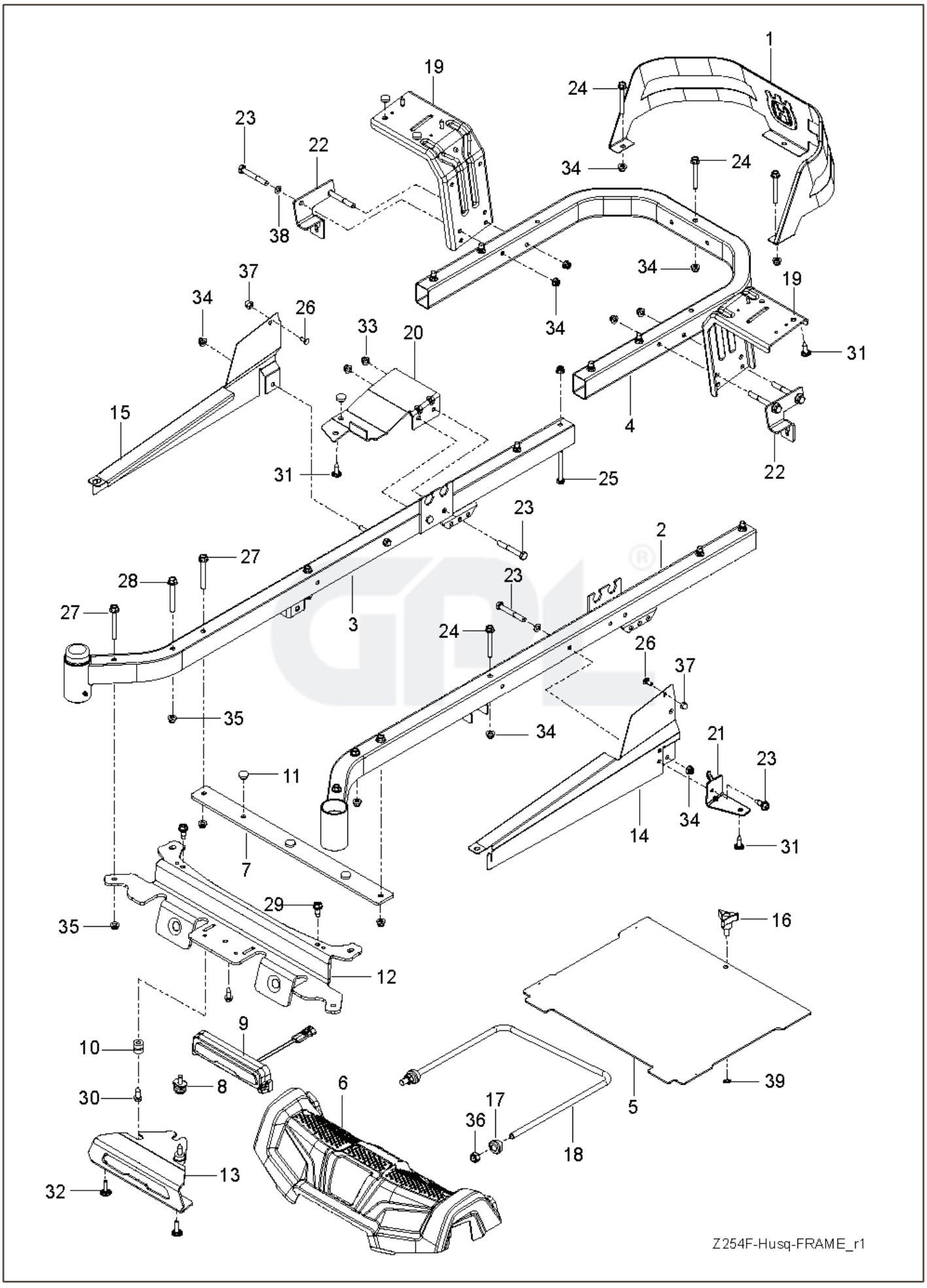
1
19
24
23
22
34
24
38
37
34
26
33
20
34
19
31
15
4
31
25
22
23
2
27
28
27
3
23
24
26
37
35
34
21
23
11
14
34
31
7
29
16
35
12
9
10
39
30
8
6
5
17
36
18
13
32
Z254F-Husq-FRAME_r1

REF.	PART NO.	DESCRIPTION	REMARK	QTY.	KIT
1	585039802	GUARD		1	
2	589283402	FRAME TUBE		1	
3	589283302	FRAME TUBE		1	
4	584991002	TUBE		1	
5	598712401	PLATE KIT		1	
6	586703801	FRONT COVER		1	
7	585523004	SUPPORT		1	
8	587546901	SCREW		1	
9	585916701	LIGHT		1	
10	587225201	GROMMET		2	
11	585989301	BUMPER		7	
12	585523104	CROSS MEMBER		1	
13	587458602	BRACKET		1	
14	585331602	COVER		1	
15	585331502	COVER		1	
16	539104411	KNOB		1	
17	532195263	BUSHING		2	
18	521938101	LINK		1	
19	580501302	BRACKET		2	
20	585523404	SUPPORT		1	
21	585523604	SUPPORT		1	
22	585474302	BRACKET		2	
23	874780536	BOLT		7	
24	874780544	BOLT		5	
25	874780648	BOLT		8	
26	585940001	BOLT		2	
27	577117701	SCREW		4	
28	586654301	BOLT		2	
29	586881101	BOLT		2	
30	817580520	BOLT		2	
31	532416358	SCREW		6	
32	532421756	SCREW		2	
33	873900500	NUT		2	
34	539112899	NUT, 5/16–18, NYLOC		9	
35	521996501	NUT		8	
36	539119124	NUT		2	
37	585938101	NUT		2	
38	819111116	WASHER		6	
39	532423063	WASHER		1	

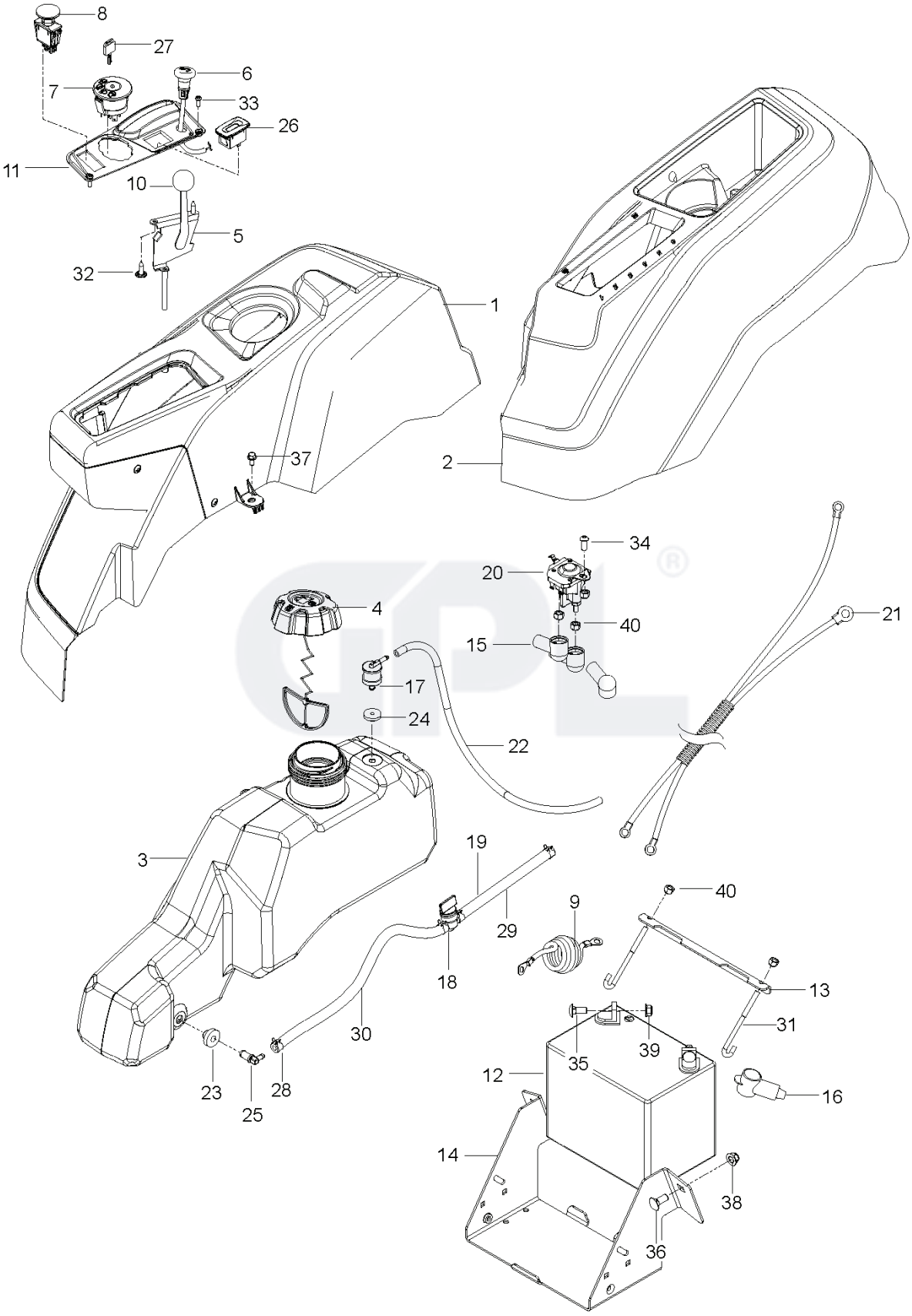
8
27
6
7
33
26
11
10
5
32
1
37
2
34
20
4
40
21
15
17
24
22
3
19
40
9
29
18
13
30
31
39
35
12
16
23
28
25
14
38
36

REF.	PART NO.	DESCRIPTION	REMARK	QTY.	KIT
1	585522801	CONSOLE ASSY		1	
2	586621201	CONSOLE ASSY		1	
3	589924702	FUEL TANK ASSY	Fits 2.75" filler neck	1	23, 24, 25
4	585124801	FUEL CAP ASSY	Fits 2.75" filler neck	1	
4	529989702	CAP	Fits 2.00" filler neck	1	
5	539102732	THROTTLE		1	
6	586881502	CHOKE CONTROL ASSY		1	
7	539107541	IGNITION SWITCH		1	
8	582107602	SWITCH		1	
9	586108201	HARNESS		1	
10	539133049	KNOB ROUND BALL		1	
11	585522701	CONTROL PANEL		1	
12	539102463	BATTERY		1	
13	510030003	BRACKET		1	
14	582609602	BOX		1	
15	532131563	COVER		3	
16	539102759	INSULATOR		1	
17	576618101	TANK VENT		1	
18	539916325	VALVE		1	
19	586123904	FUEL HOSE		1	18, 28, 29, 30
20	582042801	SOLENOID		1	
21	587198601	HARNESS		1	
22	587044529	HOSE		1	
23	532003645	BUSHING		1	
24	532437492	GROMMET		1	
25	532139277	NIPPLE		1	
26	586161801	HOUR METER		1	
27	532411933	KEY		1	
28	532123487	HOSE CLAMP		4	
29	587044810	HOSE		1	
30	587044803	HOSE		1	
31	588839401	HOOK		2	
32	532141841	SCREW		2	
33	545227101	SCREW		2	
34	539111229	SCR 1/4–20 X 5/8 BTN SKT HD ZD		1	
35	539990316	BOLT		2	
36	539990645	BOLT		2	
37	817490408	SCREW		2	
38	521996501	NUT		2	
39	539112899	NUT, 5/16–18, NYLOC		2	
40	539976978	NUT		5	
	532109748	RELAY	NOT SHOWN	1	
	505280001	TIE WRAP	NOT SHOWN	1	
	586337301	HARNESS	NOT SHOWN	1	
	586548101	HARNESS		1	

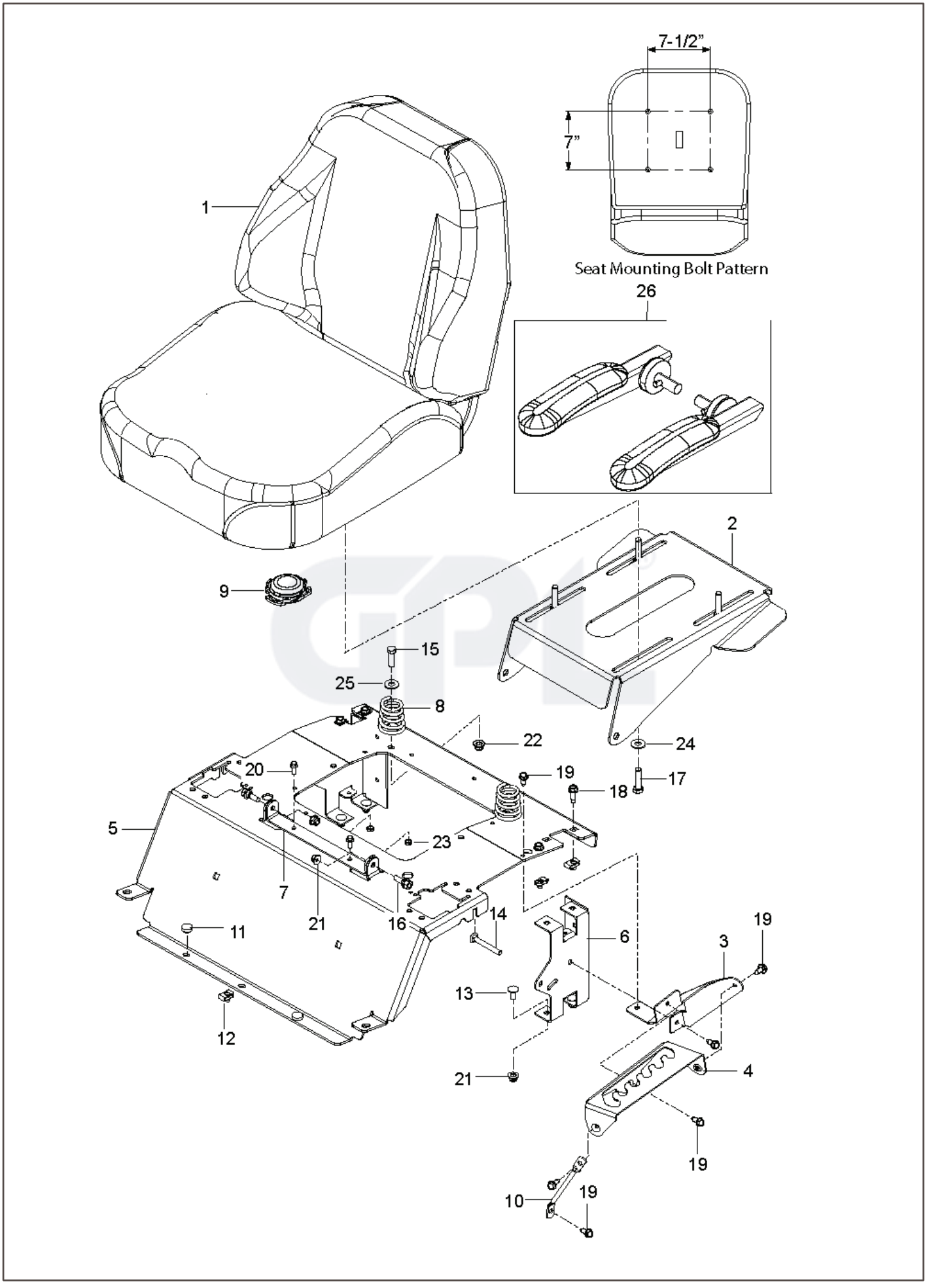
7-1/2”
7”
Seat Mounting Bolt Pattern
1
2
3
4
5
6
7
8
9
10
11
12
13
14
15
16
17
18
19
20
21
22
23
24
25
26

REF.	PART NO.	DESCRIPTION	REMARK	QTY.	KIT
1	590873404	SEAT		1	8
2	590856002	PAN		1	
3	586220802	SUPPORT PLATE		1	
4	586221202	PLATE		1	
5	589761211	PLATE		1	
6	580308202	SUPPORT		2	
7	590899902	BRACKET		1	
8	589483501	SPRING		2	
9	532401545	SWITCH		1	
10	586428601	SUPPORT LEG		1	
11	585989301	BUMPER		2	
12	539104763	CLIP		5	
13	539990316	BOLT		4	
14	510422701	SCREW		2	
15	874780620	BOLT		2	
16	532169612	SCREW		2	
17	874780520	BOLT		4	
18	817490512	SCREW		4	
19	817000510	BOLT		6	
20	589028501	SCREW		1	
21	539112899	NUT, 5/16–18, NYLOC		4	
22	521996501	NUT		2	
23	873350400	NUT		2	
24	819111116	WASHER		4	
25	819141614	WASHER		2	
26	590873402	SEAT	ARM REST KIT - NOT SHOWN	1	

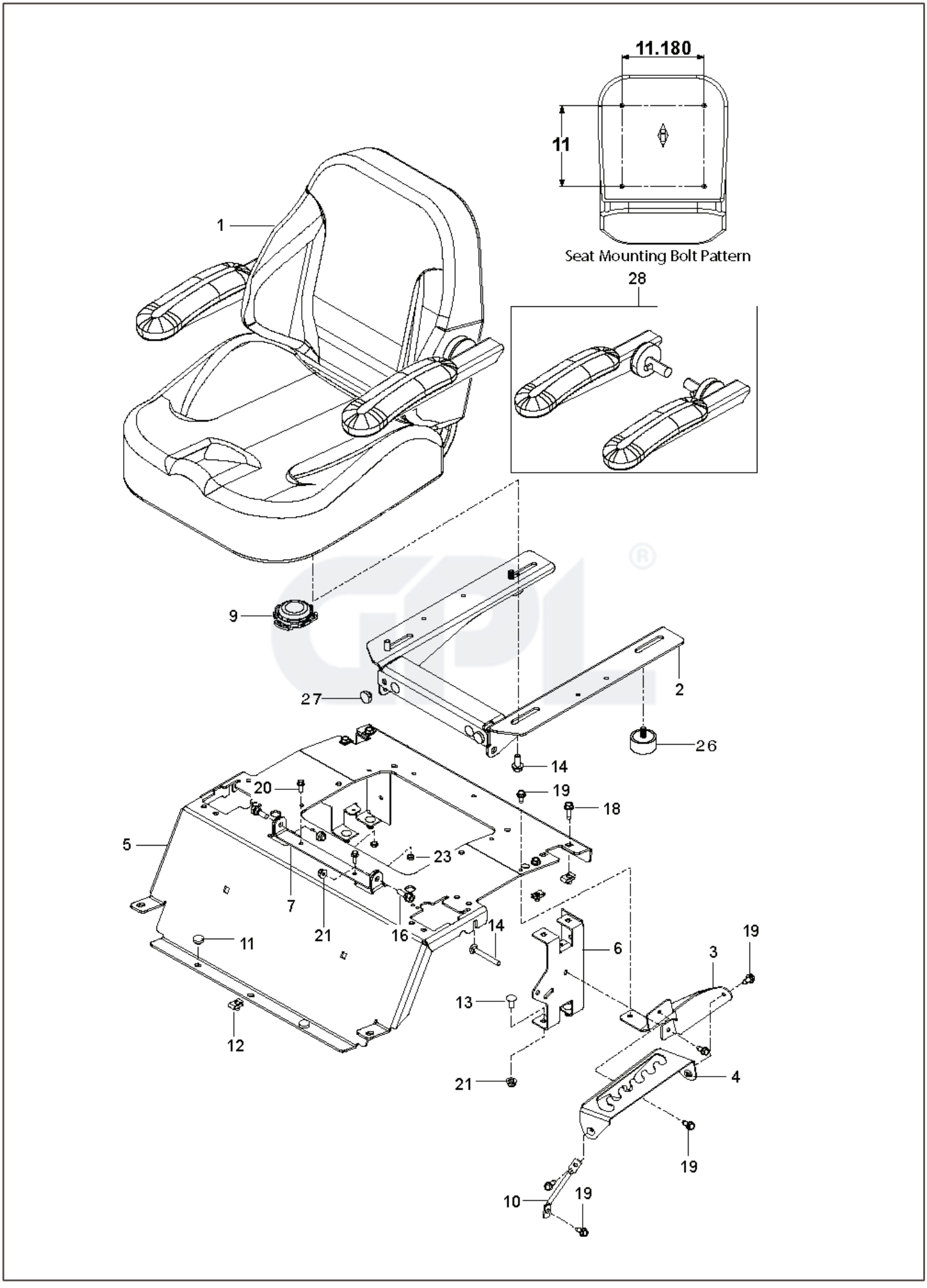
11.180
11
Seat Mounting Bolt Pattern
28
1
9
27
2
26
14
20
19
18
5
23
7
21
16
14
11
6
3
19
13
12
21
4
19
10
19

REF.	PART NO.	DESCRIPTION	REMARK	QTY.	KIT
1	598696602	SEAT		1	
2	596992703	BRACKET		1	
3	586220802	SUPPORT PLATE		1	
4	586221202	PLATE		1	
5	589761211	PLATE		1	
6	580308202	SUPPORT		2	
7	590899902	BRACKET		1	
9	532401545	SWITCH		1	
10	586428601	SUPPORT LEG		1	
11	585989301	BUMPER		2	
12	539104763	CLIP		5	
13	539990316	BOLT		4	
14	592858702	BOLT		2	
16	532169612	SCREW		2	
18	817490512	SCREW		4	
19	817000510	BOLT		6	
20	589028501	SCREW		2	
21	539112899	NUT, 5/16-18, NYLOC		4	
23	873350400	NUT		2	
26	582478702	BUMPER		2	
27	539102587	ABSORBER		2	
28	590873402	SEAT		1	

*OPTIONAL

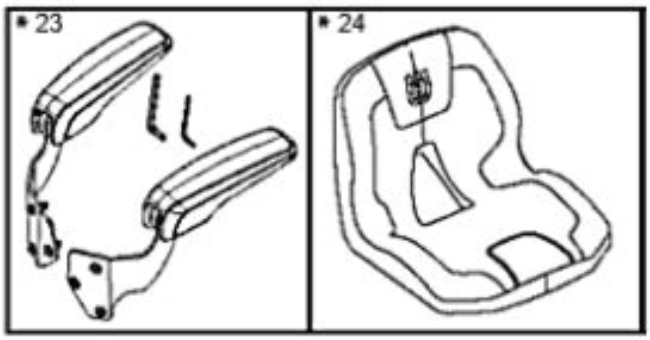
* 23
* 24

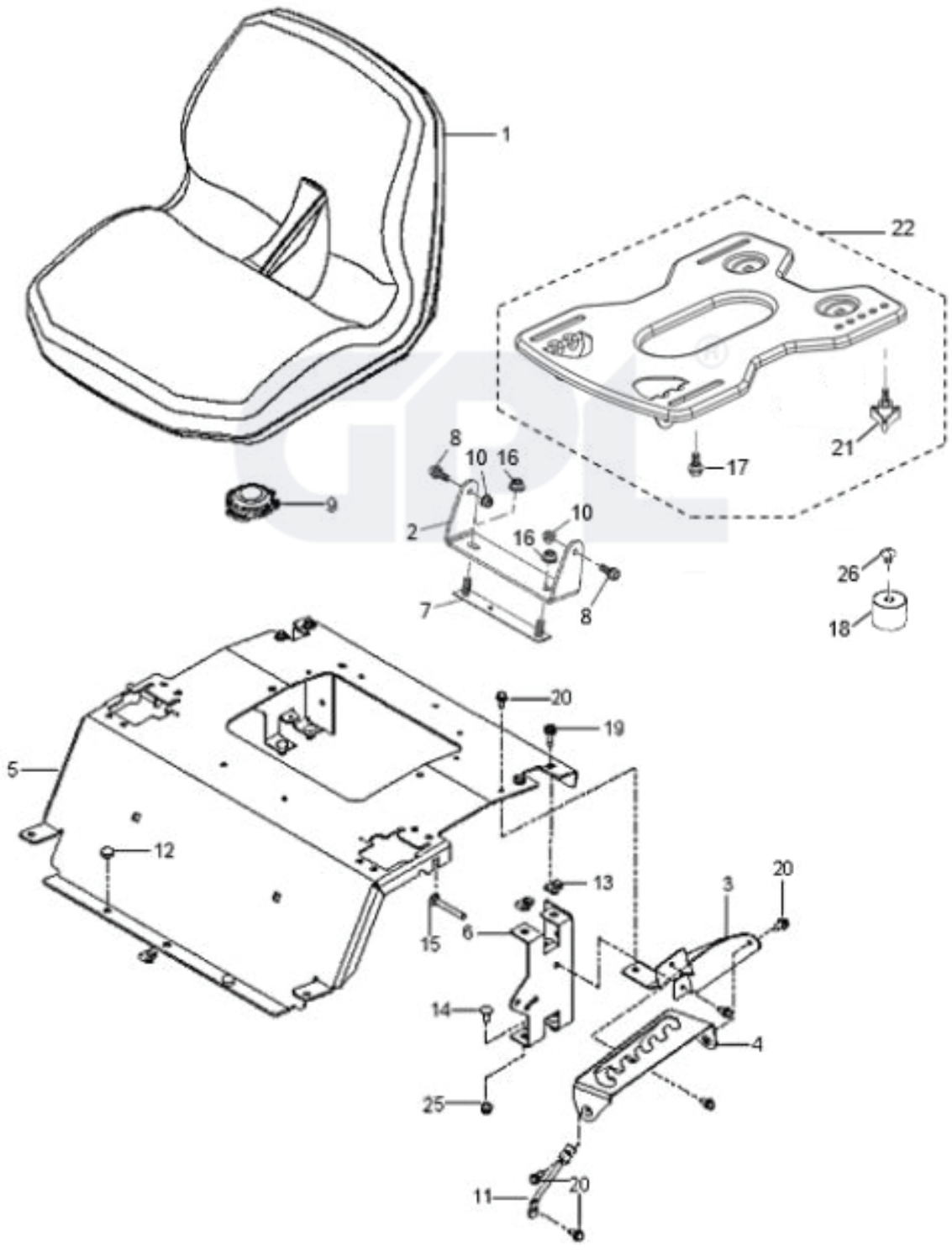
1
22
21
17
8
10
16
9
2
10
16
7
8
26
18
20
19
5
12
13
3
20
15
6
14
4
25
11
20

REF.	PART NO.	DESCRIPTION	REMARK	QTY.	KIT
1	597658101	SEAT		1	
2	597330002	BRACKET		1	
3	586220802	SUPPORT PLATE		1	
4	586221202	PLATE		1	
5	597160003	PLATE		1	
6	580308202	SUPPORT		1	
7	590777602	BRACKET		1	
8	596240701	BOLT		2	
9	532192749	SWITCH.SEAT.DP W/RAMPS		1	
10	594944401	NUT		2	
11	586428601	SUPPORT LEG		1	
12	585989301	BUMPER		2	
13	539104763	CLIP		5	
14	539990316	BOLT		4	
15	510422701	SCREW		2	
16	521996502	NUT		2	
17	597781801	BOLT		2	
18	597553401	BUMPER		2	
19	874490512	BOLT		4	
20	817000510	BOLT		6	
21	597783101	KNOB		2	
22	598001601	SERVICE KIT		1	
23	597658203	SERVICE KIT		1	
24	597959401	COVER		1	
25	539112899	NUT, 5/16–18, NYLOC		4	
26	597869301	BOLT		2	

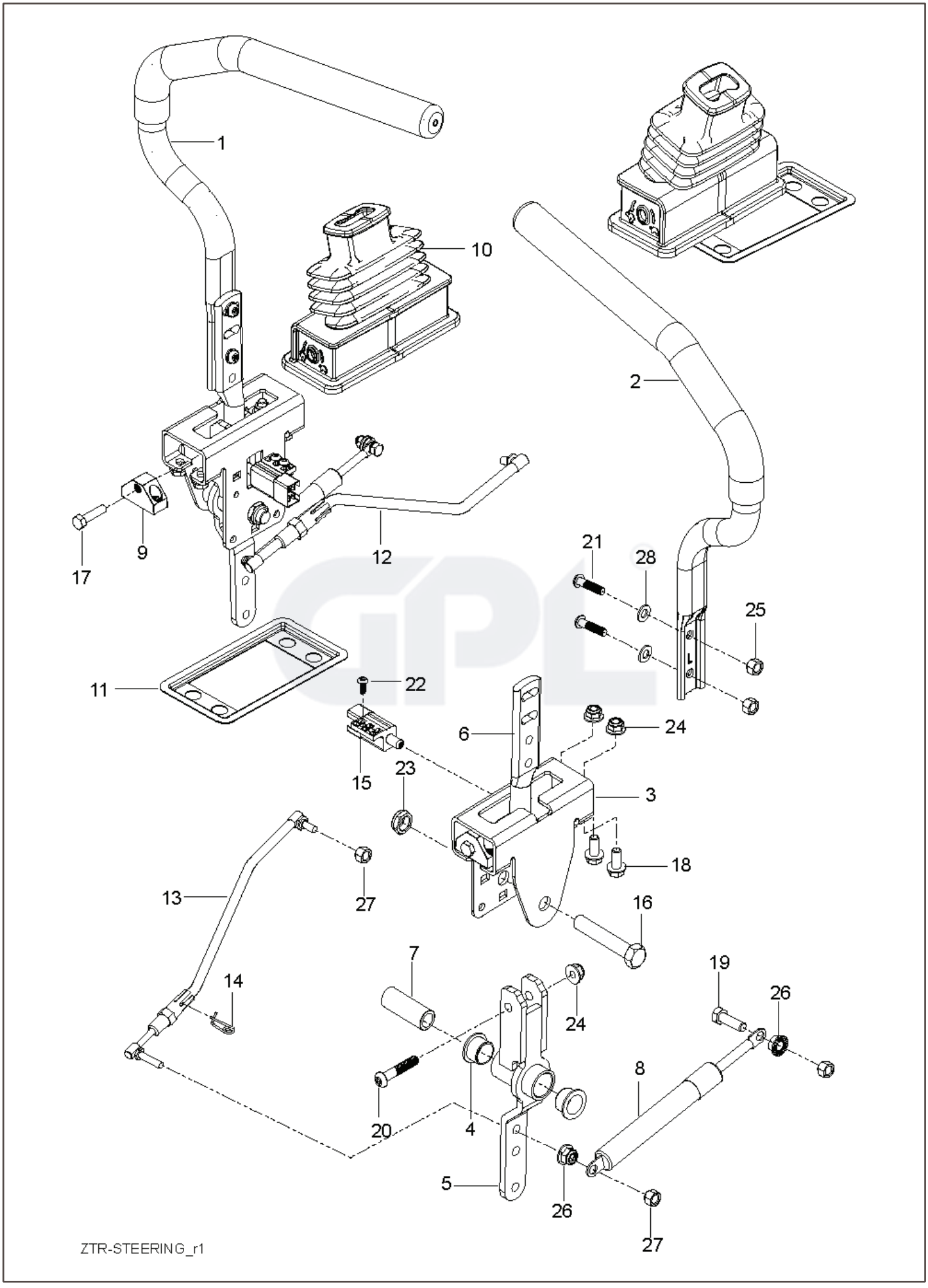
1
10
2
9
17
12
21
28
25
11
22
6
24
15
23
3
18
13
27
16
7
14
19
26
24
20
4
8
5
26
27
ZTR-STEERING_r1

REF.	PART NO.	DESCRIPTION	REMARK	QTY.	KIT
1	590090803	TUBE		1	
2	590090804	TUBE		1	
3	585124705	BRACKET		2	
4	539131518	BEARING		4	
5	576140301	LEVER		2	
6	587601702	LEVER		2	
7	584927201	SPACER		2	
8	539102720	GAS SPRING		2	
9	581437501	BLOCK		2	
10	585831601	BOOT		2	
11	585488202	FLANGE		2	
12	588604901	ROD		2	14
13	588605001	ROD		2	14
14	532199849	SPRING RETAINER		2	
15	587601501	SWITCH		2	
16	874780844	BOLT		2	
17	585986101	BOLT		2	
18	874490512	BOLT		8	
19	539990209	SCREW		2	
20	587885301	SCREW		2	
21	585985901	BOLT		4	
22	586936001	SCREW		2	
23	539108010	NUT		2	
24	539112899	NUT, 5/16–18, NYLOC		10	
25	585986001	NUT		4	
26	539990585	NUT		4	
27	873800500	LOCK NUT		4	
28	819111116	WASHER		4	

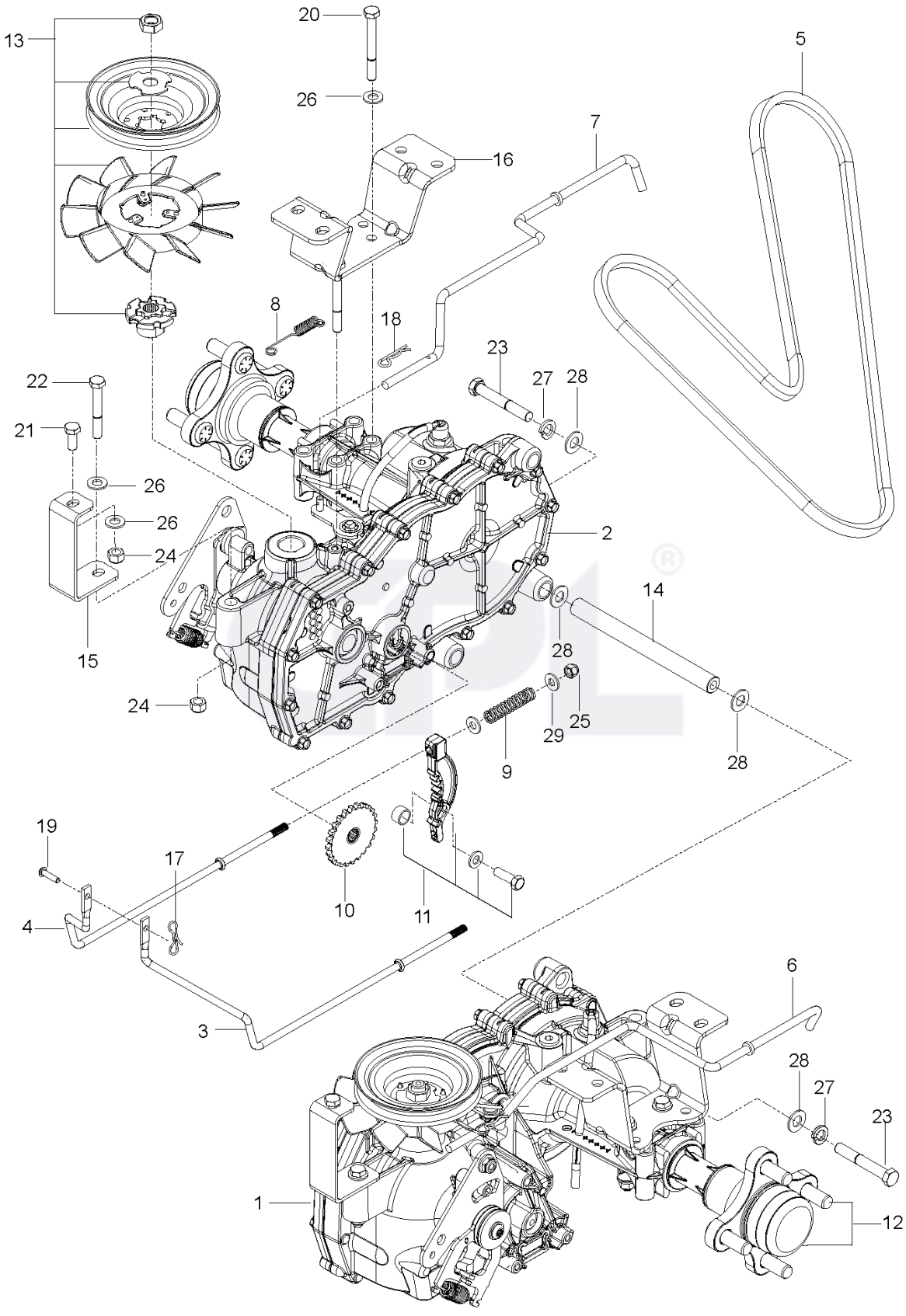
13
20
26
5
7
16
8
18
23
27
28
22
21
26
26
24
2
14
28
15
24
28
29
25
9
28
19
17
10
11
4
3
6
28
27
23
1
12

REF.	PART NO.	DESCRIPTION	REMARK	QTY.	KIT
1	510375601	TRANSMISSION		1	
2	510375602	TRANSMISSION		1	
3	574030501	LINKAGE		1	
4	574030502	LINKAGE		1	
5	539110411	BELT		1	
6	585474401	ROD		1	
7	585474501	ROD		1	
8	586665101	SPRING		2	
9	539110342	SPRING		2	
10	539120080	DISC		2	
11	539120079	ARM		2	
12	575507001	KIT		1	
13	501403602	TRANSMISSION KIT		2	
14	510184104	SPACING TUBE		2	
15	580806502	SUPPORT		2	
16	580806602	BRACKET		2	
17	587225301	PIN		1	
18	539976988	PIN		4	
19	587115301	PEN		1	
20	874780544	BOLT		4	
21	539976934	SCREW		2	
22	874780536	BOLT		2	
23	539990637	SCREW		4	
24	873800500	LOCK NUT		8	
25	539976978	NUT		2	
26	819111116	WASHER		16	
27	539990118	WASHER		4	
28	819131316	WASHER		8	
29	819091016	WASHER		4	

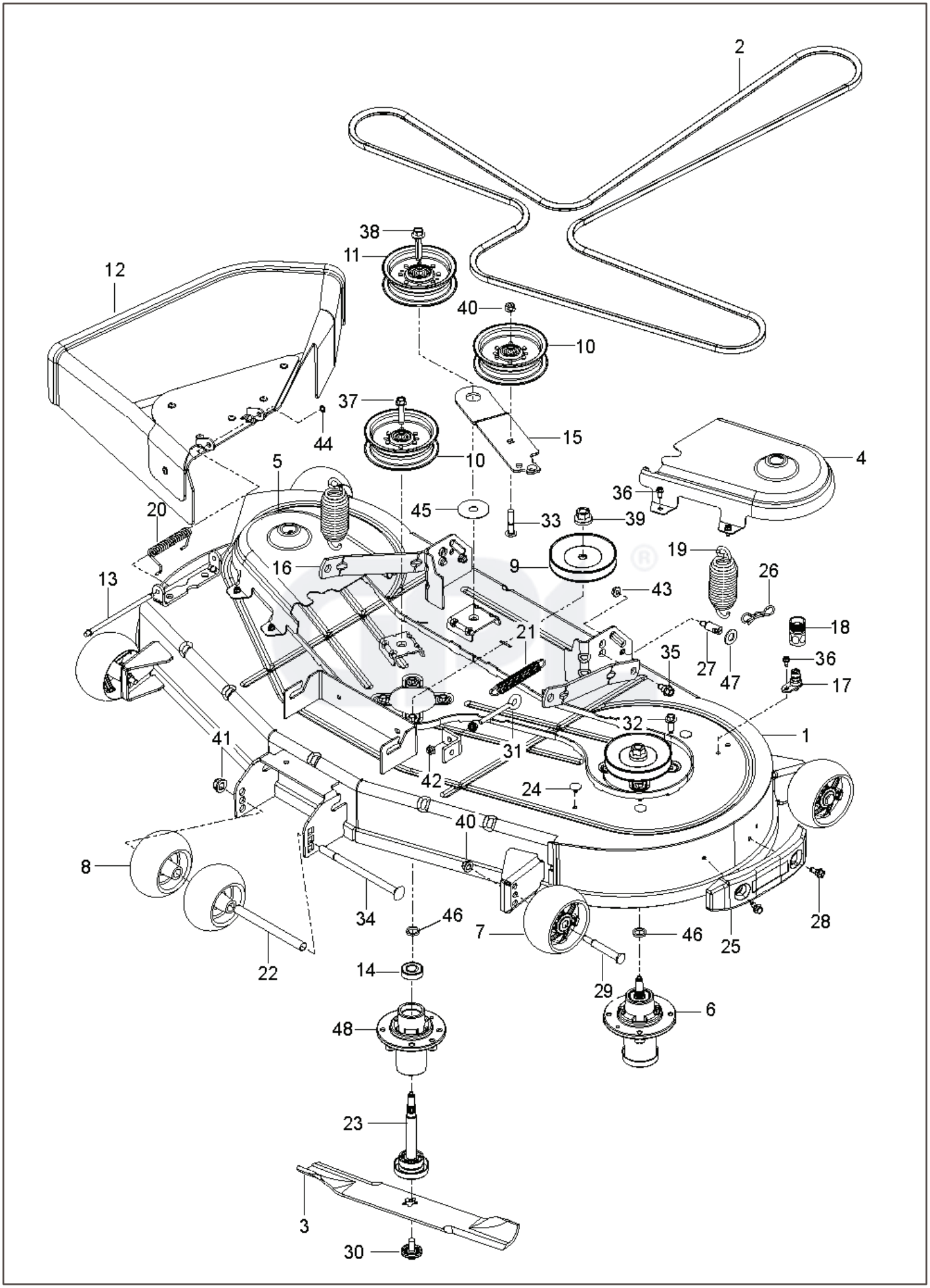
2
38
11
12
40
10
37
44
15
10
4
5
36
20
45
33
39
19
16
9
26
13
43
18
21
35
27
47
36
17
32
1
41
31
42
24
40
8
34
46
7
46
25
28
22
14
29
6
48
23
3
30

REF.	PART NO.	DESCRIPTION	REMARK	QTY.	KIT
1	582359102	DECK SHELL ASSY		1	
2	592951801	BELT		1	
3	582760501	BLADE		3	
4	590304403	COVER		1	
5	590304203	COVER		1	
6	539131898	SPINDLE		3	14, 23
7	589527301	WHEEL		4	
8	574169601	ROLLER		2	
9	532175708	PULLEY ASSY		3	
10	532197379	PULLEY		2	
11	532197380	PULLEY		1	
12	590632201	DEFLECTOR ASSY		1	
13	532131491	SHAFT		1	
14	532110485	BEARING		1	
15	582219602	ARM		1	
16	587140502	ARM		2	
17	532415598	HOSE COUPLING		1	
18	532416405	COUPLING		1	
19	539118762	SPRING		2	
20	587354701	SPRING		1	
21	587358401	SPRING		1	
22	574196501	TUBE		1	
23	532187291	SHAFT		1	
24	589813301	PLUG		3	
25	590732501	BUMPER ASSY		1	
26	532194209	SPRING		2	
27	532195161	STUD		2	
28	532170165	BOLT		2	
29	532193406	BOLT		4	
30	532193003	SCREW		3	
31	539115574	EYE BOLT		1	
32	584953901	BOLT		12	
33	872110616	BOLT		1	
34	872140864	BOLT		1	
35	532196539	BOLT		2	
36	532137729	SCREW		9	
37	817490628	SCREW		1	
38	588438301	SCREW		1	
39	532400234	NUT		3	
40	873900600	NUT		5	
41	521991101	NUT		1	
42	539990585	NUT		2	
43	873900500	NUT		2	
44	532110452	NUT		1	
45	532178515	WASHER		1	
46	532187690	WASHER		3	
47	819191912	WASHER		2	
48	539131767	MANDREL. HOUSING - CAST IRON		1	

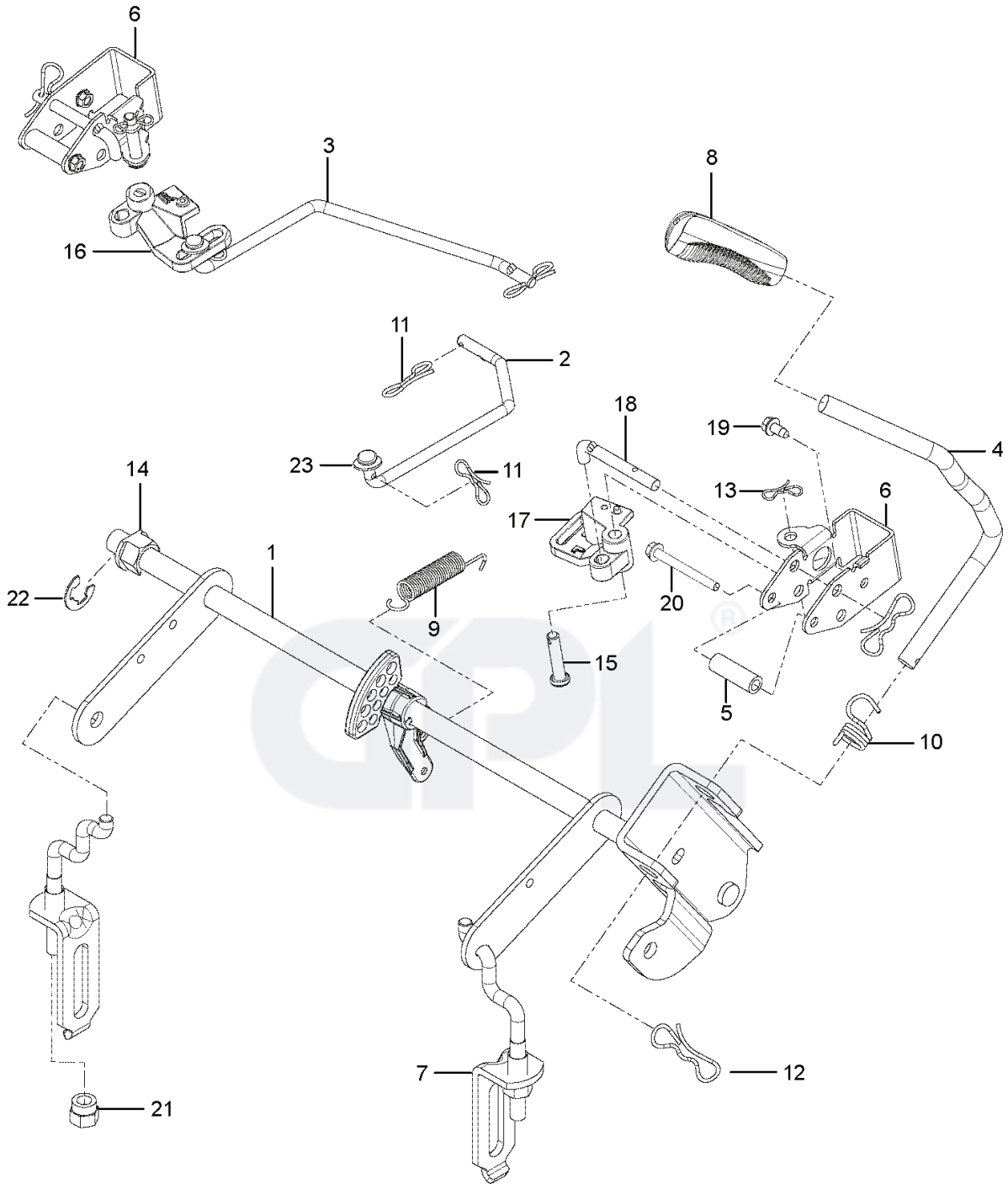
6
3
16
8
11
2
18
19
4
23
11
14
13
6
17
1
22
9
20
15
5
10
7
12
21

REF.	PART NO.	DESCRIPTION	REMARK	QTY.	KIT
1	586429702	SHAFT ASSY		1	14, 22
2	586457101	LINK		1	
3	586457201	LINK		1	
4	586428701	HANDLE		1	8, 10, 12
5	580486101	SPACER		2	
6	585682102	BRACKET		2	
7	587623001	LINK ASSY		2	21
8	580962301	GRIP		1	
9	586867601	SPRING		1	
10	532196314	SPRING		1	
11	587225301	PIN		2	
12	532194209	SPRING		3	
13	532194208	PIN		2	
14	510184901	BUSHING		2	
15	585701401	PIN		2	
16	586457501	BELLCRANK	RIGHT	1	
17	586457401	BELLCRANK	LEFT	1	
18	585682001	ROD		2	
19	532137729	SCREW		2	
20	586561301	SCREW		2	
21	532175994	NUT		2	
22	812000002	RETAINER RING		1	
23	819131316	WASHER		2	

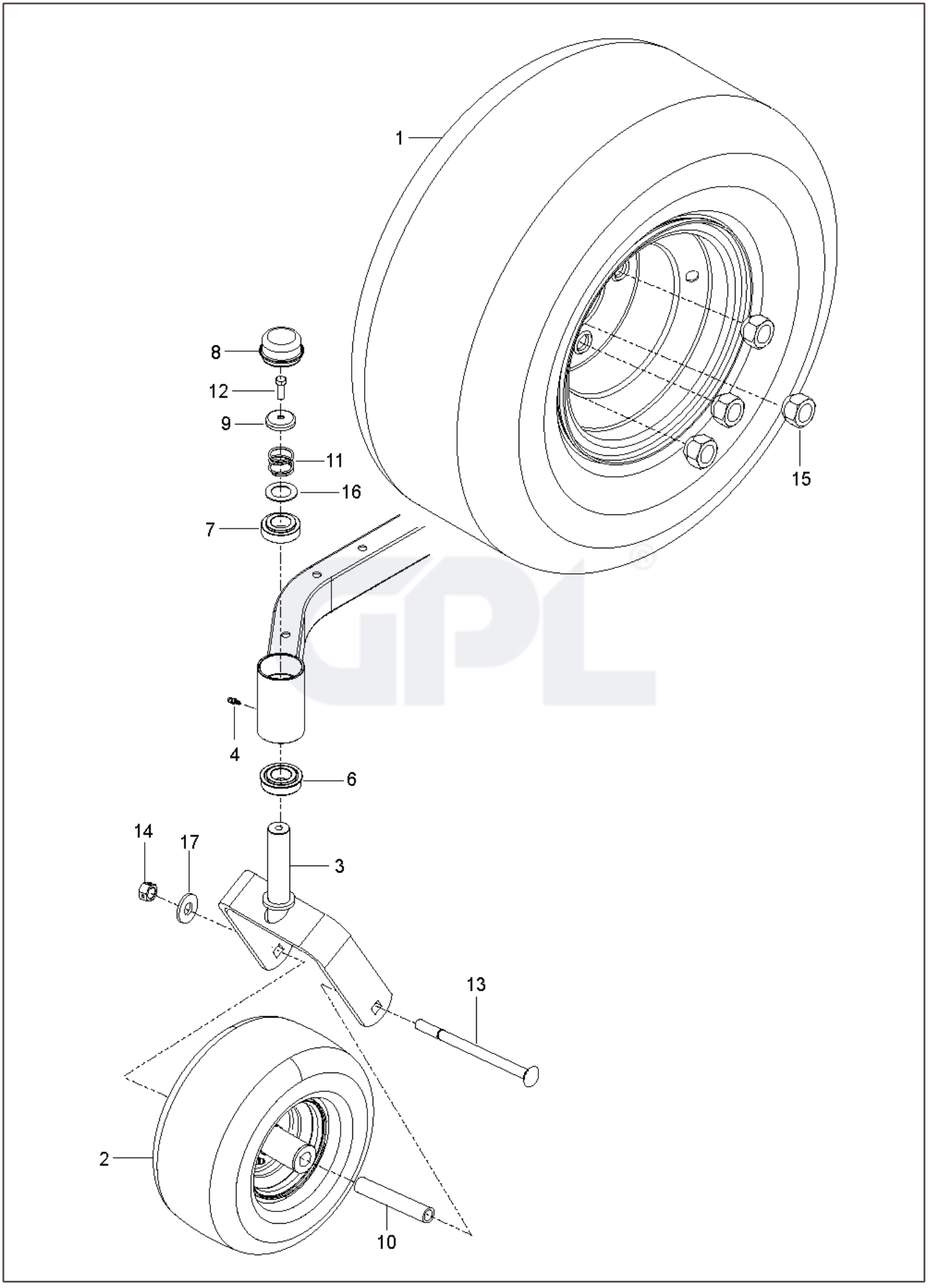
1
8
12
9
11
16
7
15
4
6
14
17
3
13
2
10

REF.	PART NO.	DESCRIPTION	REMARK	QTY.	KIT
1	590486601	WHEEL		2	
2	576588602	WHEEL ASSY		2	
3	586650302	YOKE		2	
4	539115638	FITTING		2	
6	539112660	BEARING		2	
7	539117901	BUSHING		2	
8	539102535	CAP		2	
9	539115749	CASTER PLUG		2	
10	585995401	SPACER		2	
11	539115747	SPRING		2	
12	874950516	SCREW		2	
13	576601501	SCREW		2	
14	873930800	NUT		2	
15	587653902	NUT		8	
16	539115675	WASHER		2	
17	819182212	WASHER		2	