Z 254i, 967324202, 2015-01

SPARE PARTS LIST

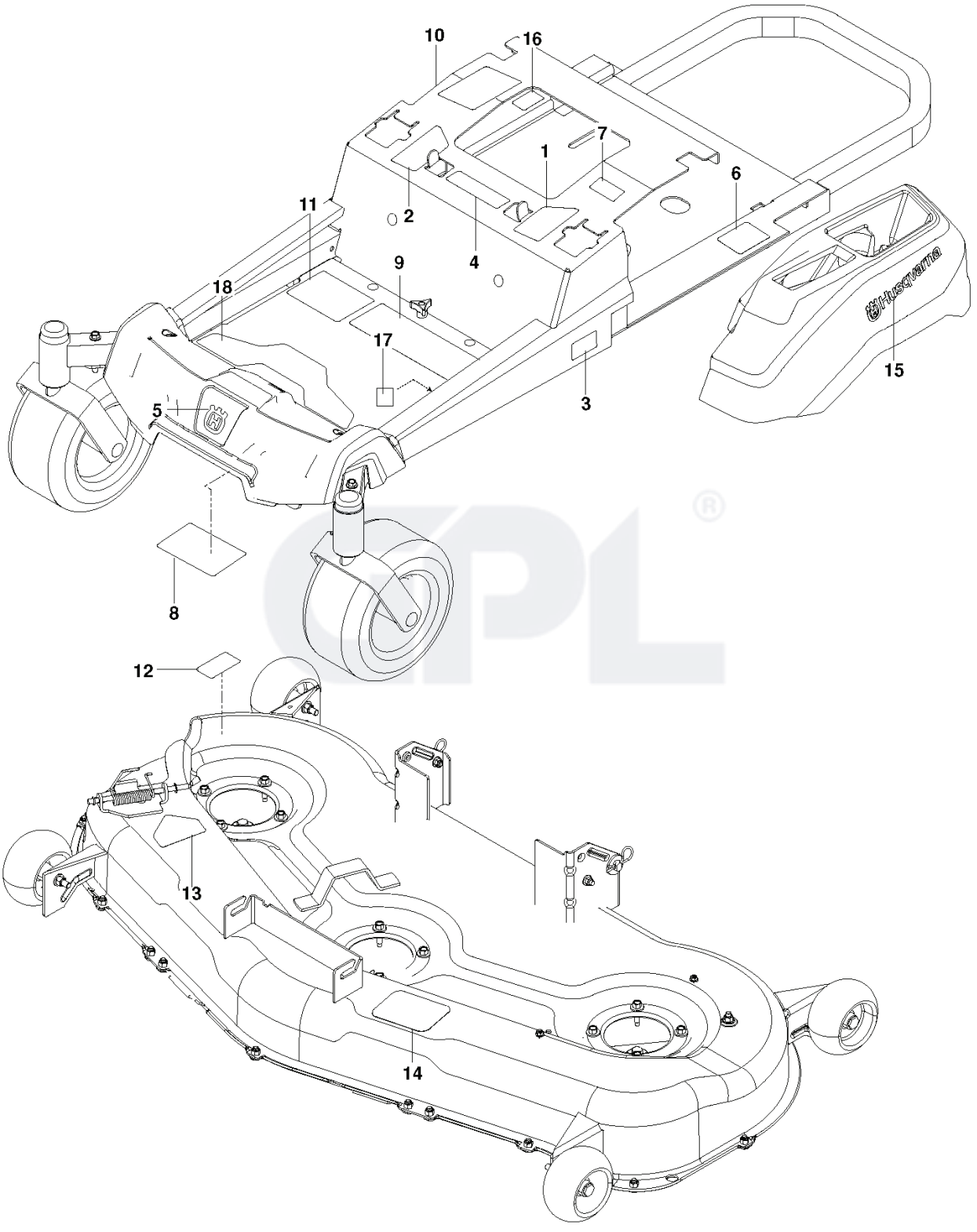
10
16
7
1
6
11
2
4
9
18
17
15
3
5
8
12
13
14

REF.	PART NO.	DESCRIPTION	REMARK	QTY.	KIT
1	587595601	DECAL	STEER / BRAKE LT	1	
2	587595501	DECAL	STEER / BRAKE RT	1	
3	587865401	DECAL	Z 254i	2	
4	539105745	DECAL	BATTERY WARNING	1	
5	532428677	DECAL	CROWN	1	
6	539108385	DECAL	DO NOT TOW	1	
7	539108386	DECAL	EXIT MOWER	1	
8	539109897	DECAL	SERVICE	1	
9	583934001	DECAL		1	
10	532423829	DECAL		1	
11	588701501	DECAL	START	1	
12	581724401	DECAL	DEFLECTOR	1	
13	584904601	DECAL	BLADE DANGER	1	
14	539112620	DECAL	BELT ROUTING	1	
15	577469001	DECAL	HUSQVARNA	2	
16	539110279	DECAL		1	
17	581724102	DECAL	DB80	1	
18	587000701	PAD		1	

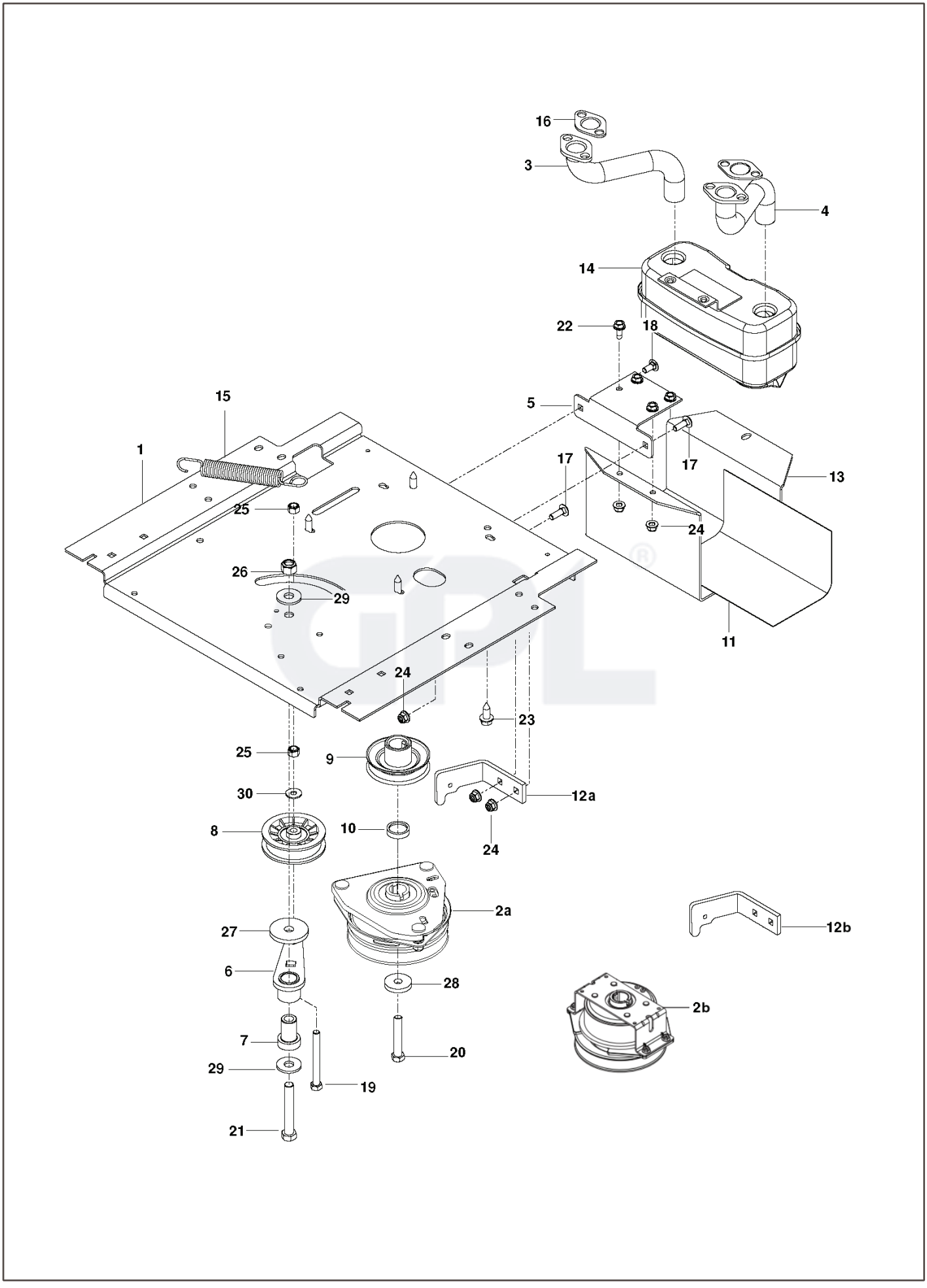
16
3
4
14
22
18
5
15
1
17
17
13
25
24
26
29
11
24
23
25
9
12a
30
8
10
24
2a
12b
27
6
28
2b
7
20
29
19
21

REF.	PART NO.	DESCRIPTION	REMARK	QTY.	KIT
1	588017102	PLATE		1	
2a	532400008	CLUTCH		1	
2b	587241601	CLUTCH		1	
3	581881001	TUBE		1	
4	581881101	TUBE		1	
5	581886702	BRACKET		1	
6	532448145	ARM		1	
7	539101231	SPINDLE		1	
8	539110311	PULLEY		1	
9	587537401	PULLEY		1	
10	587660101	SPACER		1	
11	539132859	HEAT SHIELD		1	
12b	587633302	STOP		1	
12a	522442506	STOP		1	
13	587451202	GUARD		1	
14	539131604	MUFFLER ASSY		1	
15	532196105	SPRING		1	
16	532165391	GASKET		2	
17	872140508	BOLT		2	
18	872140506	BOLT		2	
19	874520656	BOLT		1	
20	581332803	BOLT		1	
21	874780852	BOLT		1	
22	817490512	SCREW		4	
23	817120616	SCREW		4	
24	539112899	NUT, 5/16–18, NYLOC		5	
25	539976979	NUT		2	
26	873800800	NUT		1	
27	539112670	WASHER		1	
28	532126197	WASHER		1	
29	819182212	WASHER		2	
30	819121414	WASHER		2	

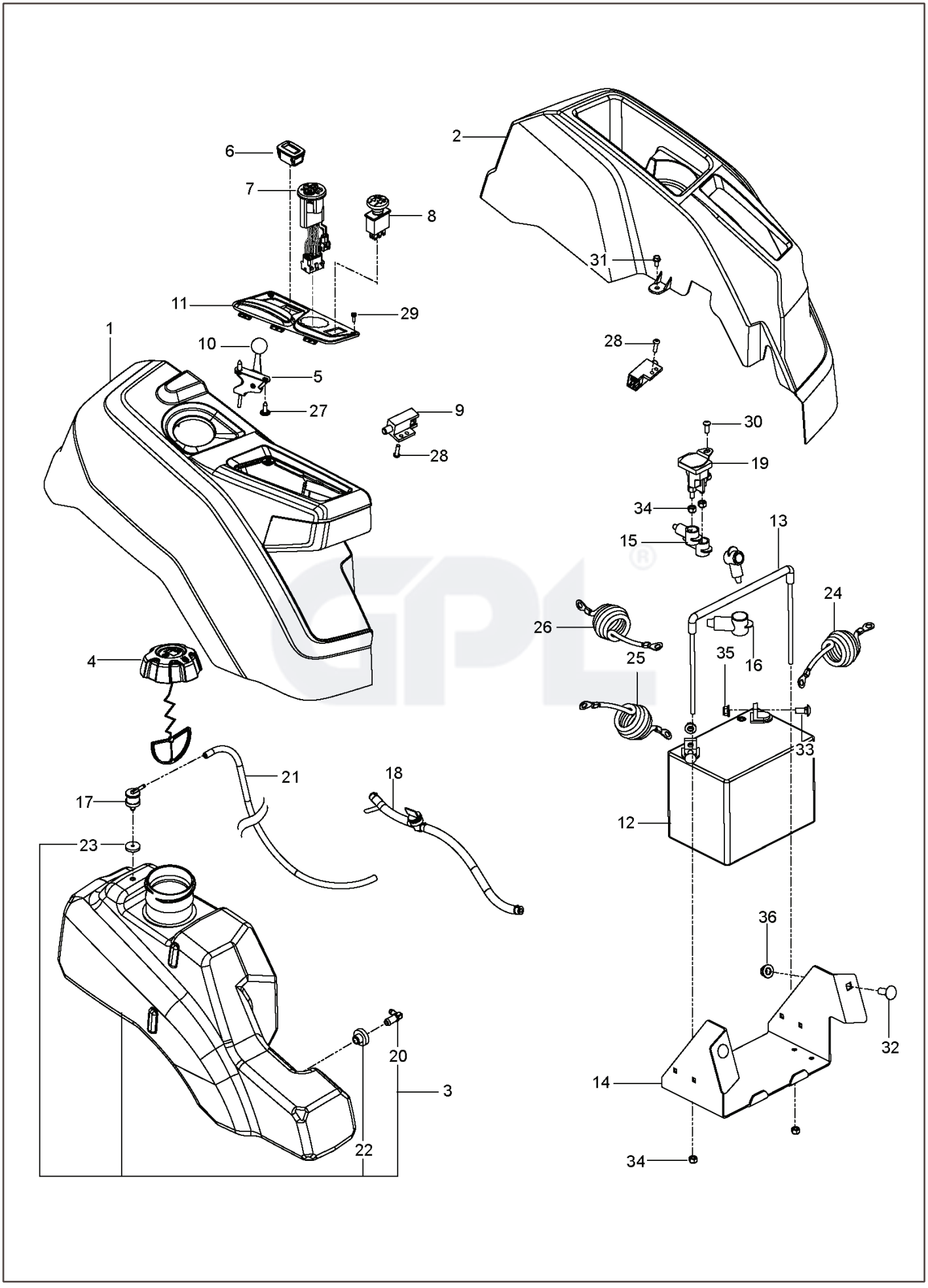
1
2
3
4
5
6
7
8
9
10
11
12
13
14
15
16
17
18
19
20
21
22
23
24
25
26
27
28
29
30
31
32
33
34
35
36

REF.	PART NO.	DESCRIPTION	REMARK	QTY.	KIT
1	585522801	CONSOLE ASSY		1	
2	586621201	CONSOLE ASSY		1	
3	578180602	FUEL TANK ASSY	Fits 2.75" filler neck	1	
4	585124801	FUEL CAP ASSY	Fits 2.75" filler neck	1	
4	529989702	CAP	Fits 2.00" filler neck	1	
5	585974902	CABLE		1	
6	586161801	HOUR METER		1	
7	586836704	SWITCH		1	
8	582107602	SWITCH		1	
9	587601501	SWITCH		2	
10	539133049	KNOB ROUND BALL		1	
11	585522703	CONTROL PANEL		1	
12	539102436	BATTERY		1	
13	539131209	BATTERY TIE DOWN ASSEMBLY		1	
14	585048702	BOX		1	
15	532131563	COVER		3	
16	539102759	INSULATOR		1	
17	576618101	TANK VENT		1	
18	586123904	FUEL HOSE		1	
19	532192507	SOLENOID		1	
20	532139277	NIPPLE		1	
21	576660608	HOSE		1	
22	532003645	BUSHING		1	
23	532437492	GROMMET		1	
24	586108201	HARNESS		1	
25	585306904	CABLE		1	
26	585734303	CABLE		1	
27	532141841	SCREW		2	
28	574822701	SCREW		2	
29	545227101	SCREW		2	
30	539111229	SCR 1/4–20 X 5/8 BTN SKT HD ZD		1	
31	817490408	SCREW		2	
32	539990645	BOLT		2	
33	872140506	BOLT		2	
34	873800400	NUT		5	
35	539112899	NUT, 5/16–18, NYLOC		2	
36	521996501	NUT		2	
	587232102	HARNESS	NOT SHOWN	1	
	532109748	RELAY		1	

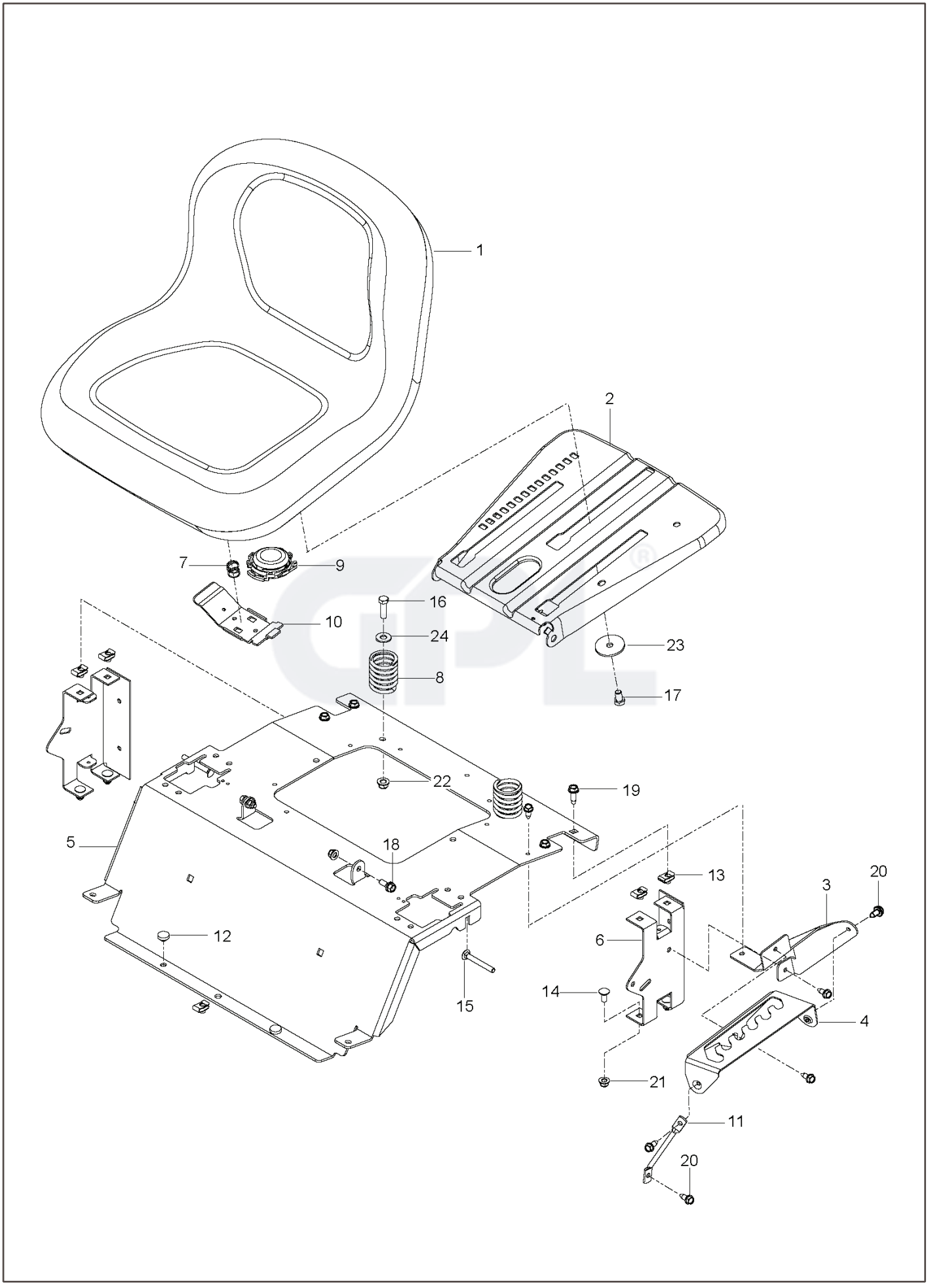
1
2
7
9
10
16
24
8
23
17
22
19
5
18
13
20
3
6
12
14
15
4
21
11
20

REF.	PART NO.	DESCRIPTION	REMARK	QTY.	KIT
1	532439822	SEAT		1	
2	532196977	PLATE		1	
3	586220802	SUPPORT PLATE		1	
4	586221202	PLATE		1	
5	577260503	SUPPORT		1	
6	580308202	SUPPORT		2	
7	532198200	SPRING		1	
8	587613301	SPRING		2	
9	581429302	SWITCH		1	
10	532197661	HANDLE		1	
11	586428601	SUPPORT LEG		1	
12	585989301	BUMPER		2	
13	539104763	CLIP		5	
14	872140506	BOLT		4	
15	510422701	SCREW		2	
16	874780620	BOLT		2	
17	874760512	BOLT		1	
18	539110303	BOLT		2	
19	817490512	SCREW		4	
20	817000510	BOLT		6	
21	539112899	NUT, 5/16–18, NYLOC		4	
22	521996501	NUT		2	
23	539111897	WASHER		1	
24	819141614	WASHER		2	

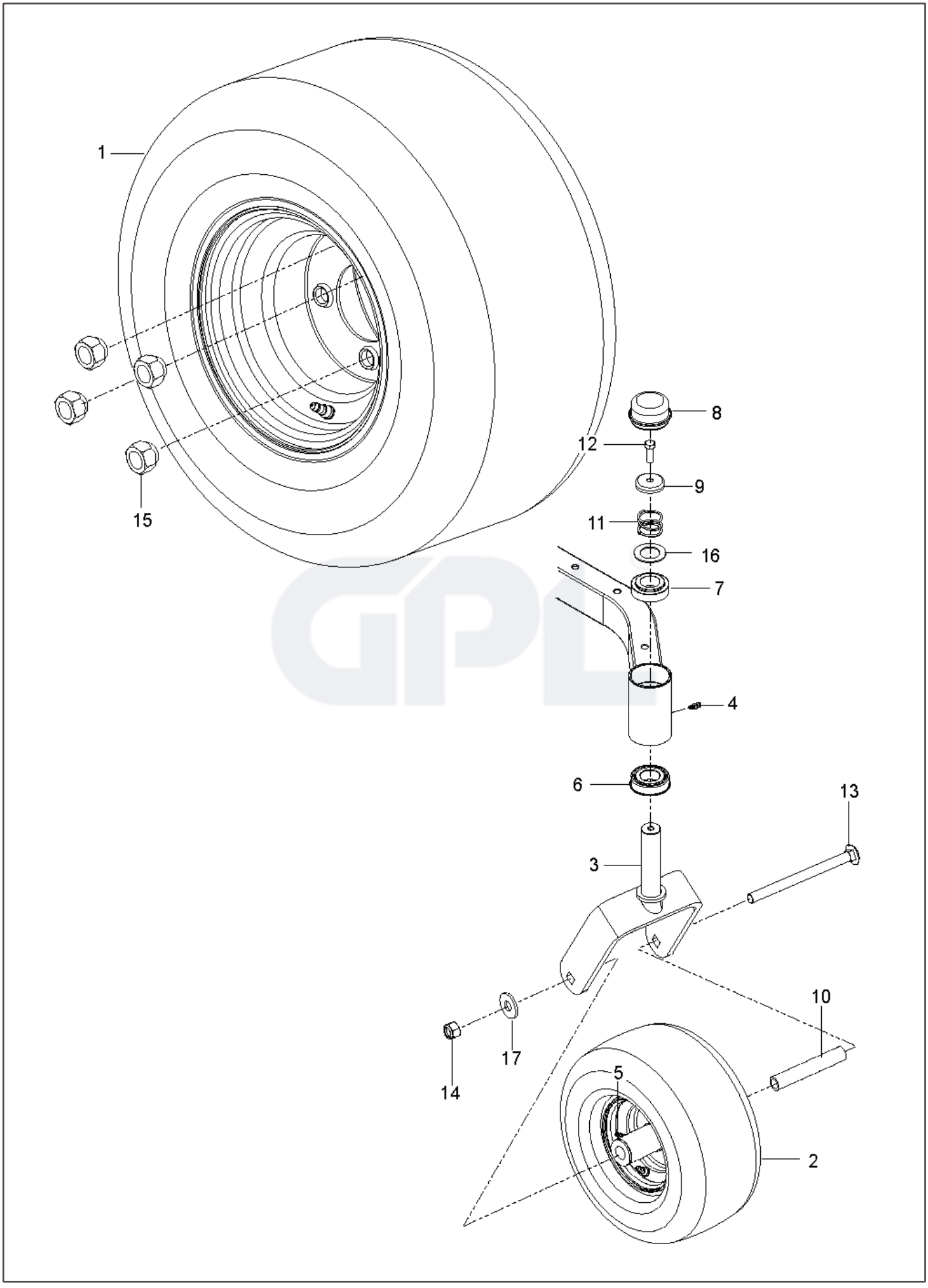
1
15
8
12
9
11
16
7
4
6
13
3
10
17
14
5
2

REF.	PART NO.	DESCRIPTION	REMARK	QTY.	KIT
1	590486601	WHEEL		2	
2	576588602	WHEEL ASSY		2	
3	586650302	YOKE		2	
4	539115638	FITTING		2	
5	539103300	NIPPLE		2	
6	539112660	BEARING		2	
7	539117901	BUSHING		2	
8	539102535	CAP		2	
9	539115749	CASTER PLUG		2	
10	576588901	SPACER		2	
11	539115747	SPRING		2	
12	874950516	SCREW		2	
13	576601501	SCREW		2	
14	873930800	NUT	Nut 1/2–13 Hex Center Lock (595316501)	2	
15	587653902	NUT		8	
16	539115675	WASHER		2	
17	819182212	WASHER		2	

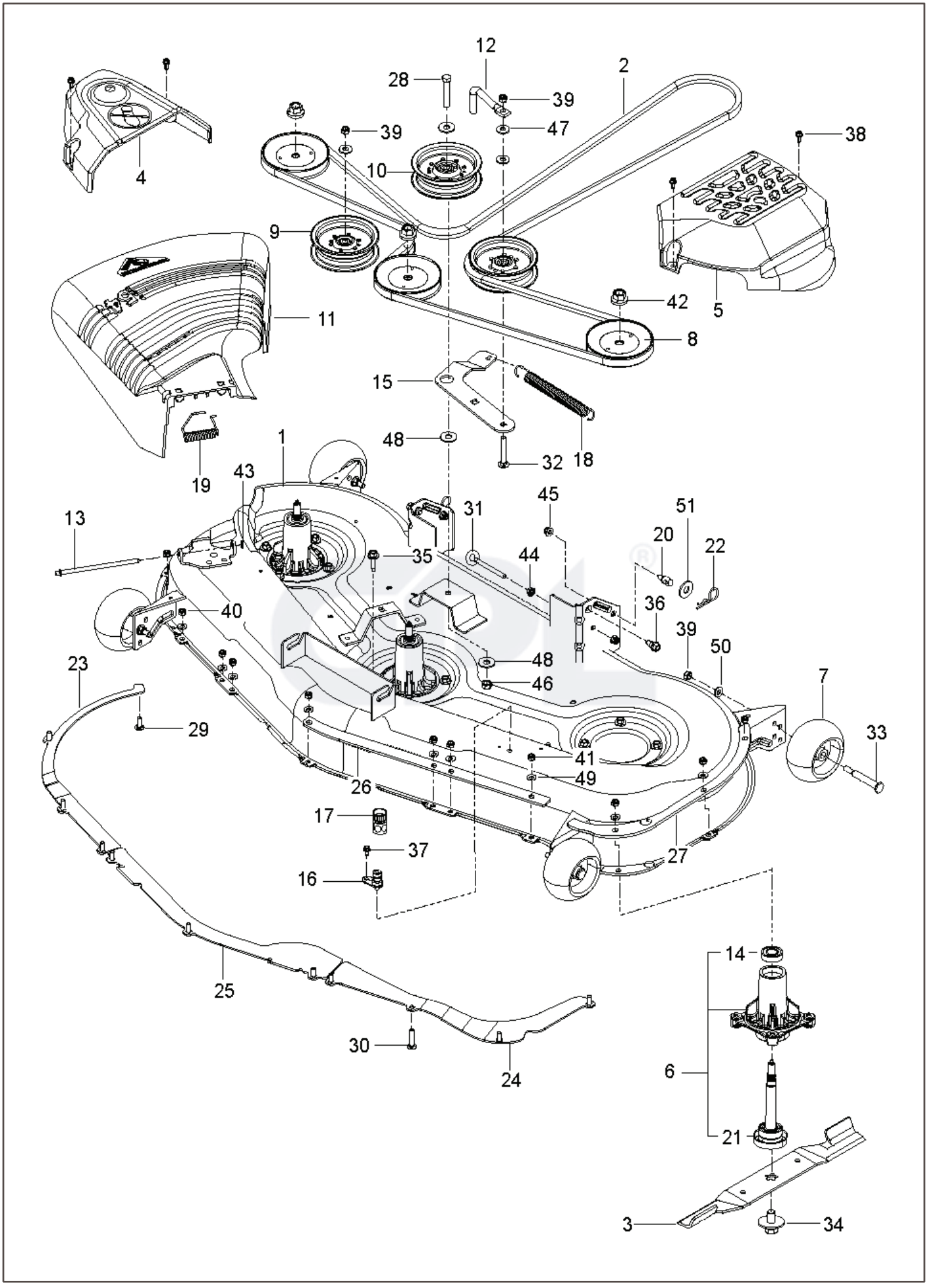
12
2
28
39
47
39
38
4
10
9
5
42
11
8
15
48
32
18
19
1
43
45
31
51
13
20
22
35
44
40
36
39
50
23
48
46
7
29
33
41
49
26
17
37
27
16
14
25
30
6
24
21
3
34

REF.	PART NO.	DESCRIPTION	REMARK	QTY.	KIT
1	583909301	DECK	W/ Safety Decals	1	
2	539114557	BELT		1	
3	532187256	RIDE ON BLADE		3	
5	532187297	COVER		1	
4	532188187	COVER		1	
6	587125401	MANDREL		3	
7	589527301	WHEEL		4	
8	532173436	PULLEY		3	
9	532196106	PULLEY		2	
10	532196104	PULLEY		1	
11	532187257	DEFLECTOR		1	
12	522629701	KEEPER		1	
13	532131491	SHAFT		1	
14	532110485	BEARING		3	
15	510220002	ARM		1	
16	532415598	HOSE COUPLING		1	
17	532416405	COUPLING		1	
18	539120920	SPRING		1	
19	532178102	SPRING		1	
20	532195161	STUD		2	
21	532187291	SHAFT		1	
22	539976989	SPLIT PIN		2	
23	532187342	BAFFLE		1	
24	532187344	BAFFLE		1	
25	532187607	BAFFLE		1	
26	585322605	REINFORCEMENT PLATE		1	
27	585322805	REINFORCEMENT PLATE		1	
28	874780740	BOLT		1	
29	872110508	BOLT		5	
30	872110510	BOLT		7	
31	539115574	EYE BOLT		1	
32	539128101	BOLT		1	
33	532193406	BOLT		4	
34	584309301	SCREW		3	
35	584953901	BOLT		12	
36	532196539	BOLT		2	
37	817490408	SCREW		1	
38	532137729	SCREW		4	
39	873800600	NUT		6	
40	873800500	LOCK NUT		5	
41	873800500	LOCK NUT		7	
42	532400234	NUT		3	
43	532110452	NUT		1	
44	539990585	NUT		1	
45	539112899	NUT, 5/16–18, NYLOC		3	
46	539119124	NUT		1	
47	819141614	WASHER		3	
48	539104864	WASHER		3	
49	819111116	WASHER		12	
50	819131316	WASHER		4	
51	819212113	WASHER		2	

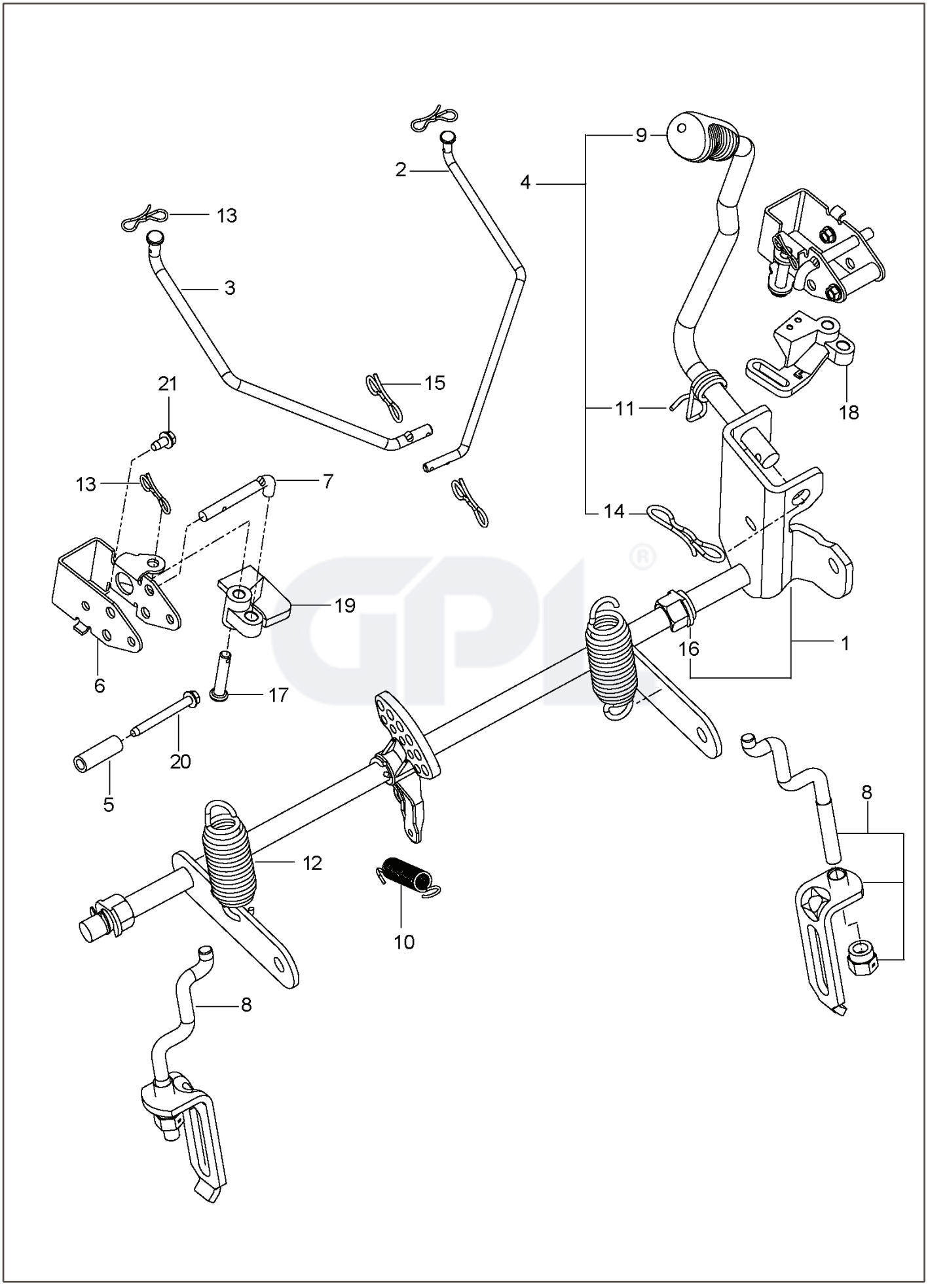

9
2
4
13
3
15
21
11
18
13
7
14
19
16
1
6
17
20
5
8
12
10
8

REF.	PART NO.	DESCRIPTION	REMARK	QTY.	KIT
1	587623101	SHAFT ASSY		1	
2	586457101	LINK		1	
3	586457201	LINK		1	
4	587622901	LIFTING LEVER ASSY		1	
5	580486101	SPACER		2	
6	585682102	BRACKET		2	
7	585682001	ROD		2	
8	587623001	LINK ASSY		2	
9	532445060	LEVER		1	
10	586867601	SPRING		1	
11	532196314	SPRING		1	
12	539118762	SPRING		1	
13	587225301	PIN		6	
14	532194209	SPRING		1	
15	532194208	PIN		2	
16	510184901	BUSHING		2	
17	585701401	PIN		2	
18	586457401	BELLCRANK	LEFT	1	
19	586457501	BELLCRANK	RIGHT	1	
20	586561301	SCREW		2	
21	532137729	SCREW		2	