Husqvarna®

Husqvarna®

www.husqvarna.com

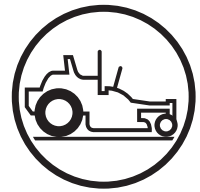

# Parts Manual

Z 554 / 967929801-00

Please read the operator manual carefully and make sure you understand the instructions before using the machine.

Gasoline containing a maximum of 10% ethanol (E10) is permitted for use in this machine. The use of gasoline with more than 10% ethanol (E10) will void the product warranty.

02.21.19 CL/JSE

114 08 65-27 Rev. 4



When you need spare parts or support in service questions, warranty issues, etc., please consult the following professional:

| | | |
|---|---|---|
| | | |
| This manual belongs to the machine with the manufacturing number: | Engine | Transmission |

## Manufacturing Number

The machine's manufacturing number can be found on the printed plate affixed to the engine compartment.

Stated on the plate, from the top are:

- The machine's type designation (I.D.)
- The manufacturer's type number (Model)
- The machine's serial number (Serial no.)

*Please have the type designation and serial number available when ordering spare parts.*

©2018 All rights reserved.
Orangeburg SC. Printed in U.S.A.

# CONTENTS


FRAME ..... 4

ENGINE MOUNTING, GUARDS & MUFFLER ..... 6

STEERING / BRAKE ..... 8

CONSOLE ..... 10

FUEL SYSTEM ..... 12

HYDRAULIC PUMP - MOTOR ..... 14

HYDRAULIC GUARDS ..... 16

WHEELS & TIRES ..... 18

MOWER LIFT / DECK LIFT ..... 20

MOWER DECK / CUTTING DECK ..... 22

SPINDLE ..... 24

SEAT ..... 26

DECALS ..... 28


Illustrations may or may not represent the actual assemblies and it is not recommended to use this manual as a guide to assemble or disassemble the mower.

NOTE: All fasteners are Grade 5 unless otherwise specified.

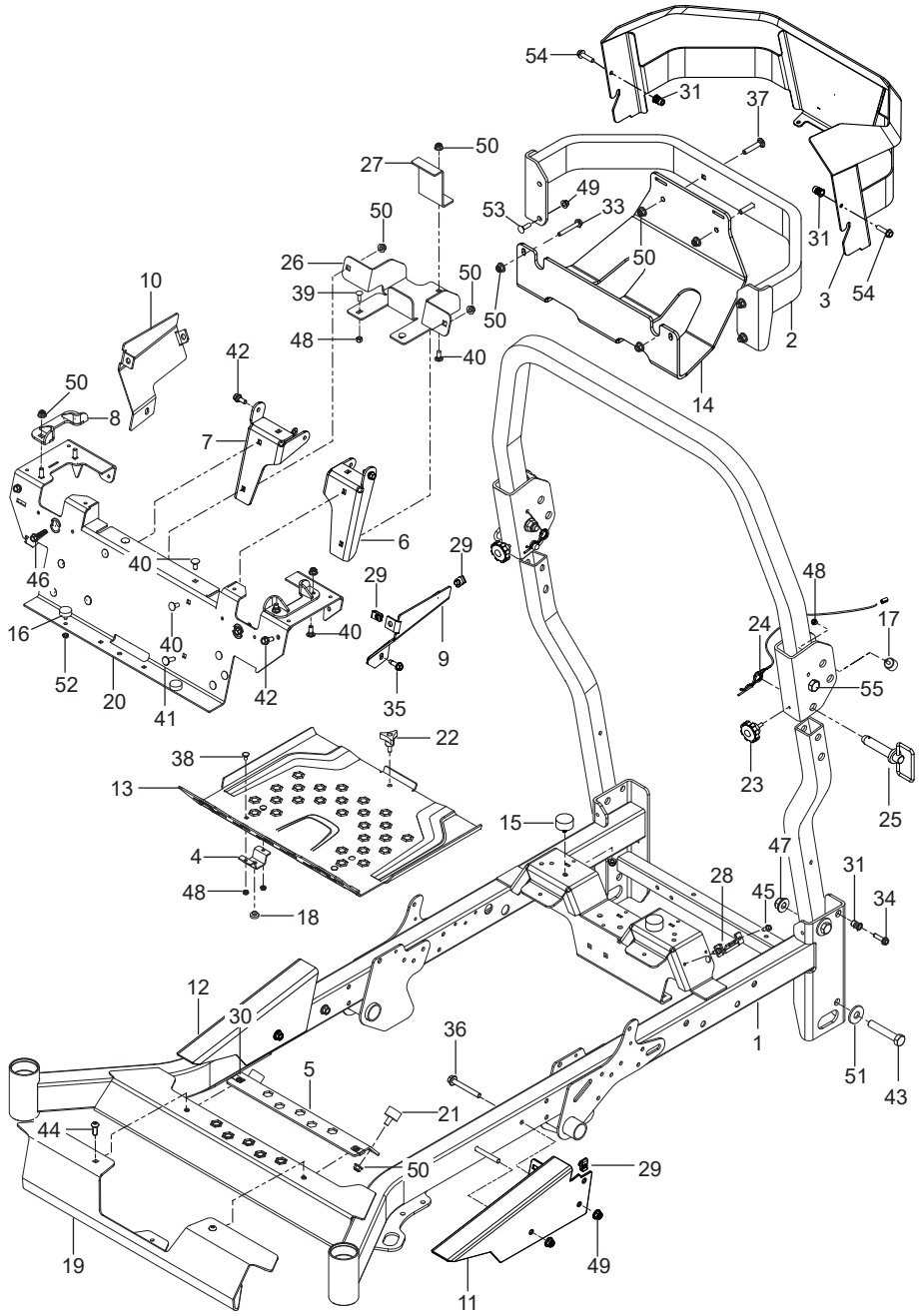


| Ref. | Part No. | Qty | Description | Kit / Assy Includes |
|---|---|---|---|---|
| 1 | 591 35 98-01 | 1 | Frame w/ Safety Decal | |
| 2 | 522 67 57-02 | 1 | Guard, Rear Org | |
| 3 | 587 89 80-02 | 1 | Guard, Engine Gry | |





| Ref. | Part No. | Qty | Description | Kit / Assy Includes |
|---|---|---|---|---|
| 1 | 574 43 73-01 | 1 | Decal, Belt Routing | |
| 2 | 590 20 94-01 | 1 | Decal, Motion/Brake Right | |
| | 590 20 95-01 | 1 | Decal, Motion/Brake Left | |
| 3 | 590 80 75-01 | 1 | Decal, Z 554 | |
| 4 | 581 72 43-01 | 2 | Decal, No Step | |
| 5 | 539 10 57-45 | 1 | Decal, Battery Warning | |
| 6 | 539 10 57-44 | 2 | Decal, Danger Belt | |
| 7 | 581 72 44-01 | 1 | Decal, Deflector Warning | |
| 8 | 532 42 41-02 | 1 | Decal, Spark Arrestor | |
| 9 | 574 45 50-01 | 1 | Decal, Crown Large | |
| 10 | 593 01 11-01 | 1 | Decal, ROPS Warning | |
| 11 | 574 56 90-02 | 1 | Decal, ROPS | |
| 12 | 574 56 94-01 | 1 | Decal, Fuse | |
| 13 | 584 90 46-01 | 1 | Decal, Deck/Deflect Warning | |
| 14 | 532 42 86-77 | 1 | Decal, Crown Small | |
| 15 | 590 79 93-01 | 1 | Decal, Deck Height | |
| 16 | 590 21 00-01 | 1 | Decal, Commercial | |
| 17 | 590 84 68-01 | 1 | Decal, Maintenance/Service | |
| 18 | 590 21 03-01 | 1 | Decal, Control Panel Right | |
| 19 | 590 21 05-01 | 1 | Decal, Control Panel Left | |
| 20 | 590 20 97-01 | 1 | Decal, Transmission Warning | |
| 21 | 590 20 92-02 | 1 | Decal, Sadle Warn | |
| 22 | 577 46 90-01 | 1 | Decal, Emblem | |
| 23 | 539 12 13-22 | 1 | Pad, Foot | |
| | NOT SHOWN | | | |
| | 577 15 01-01 | 1 | Decal, Fuel | |

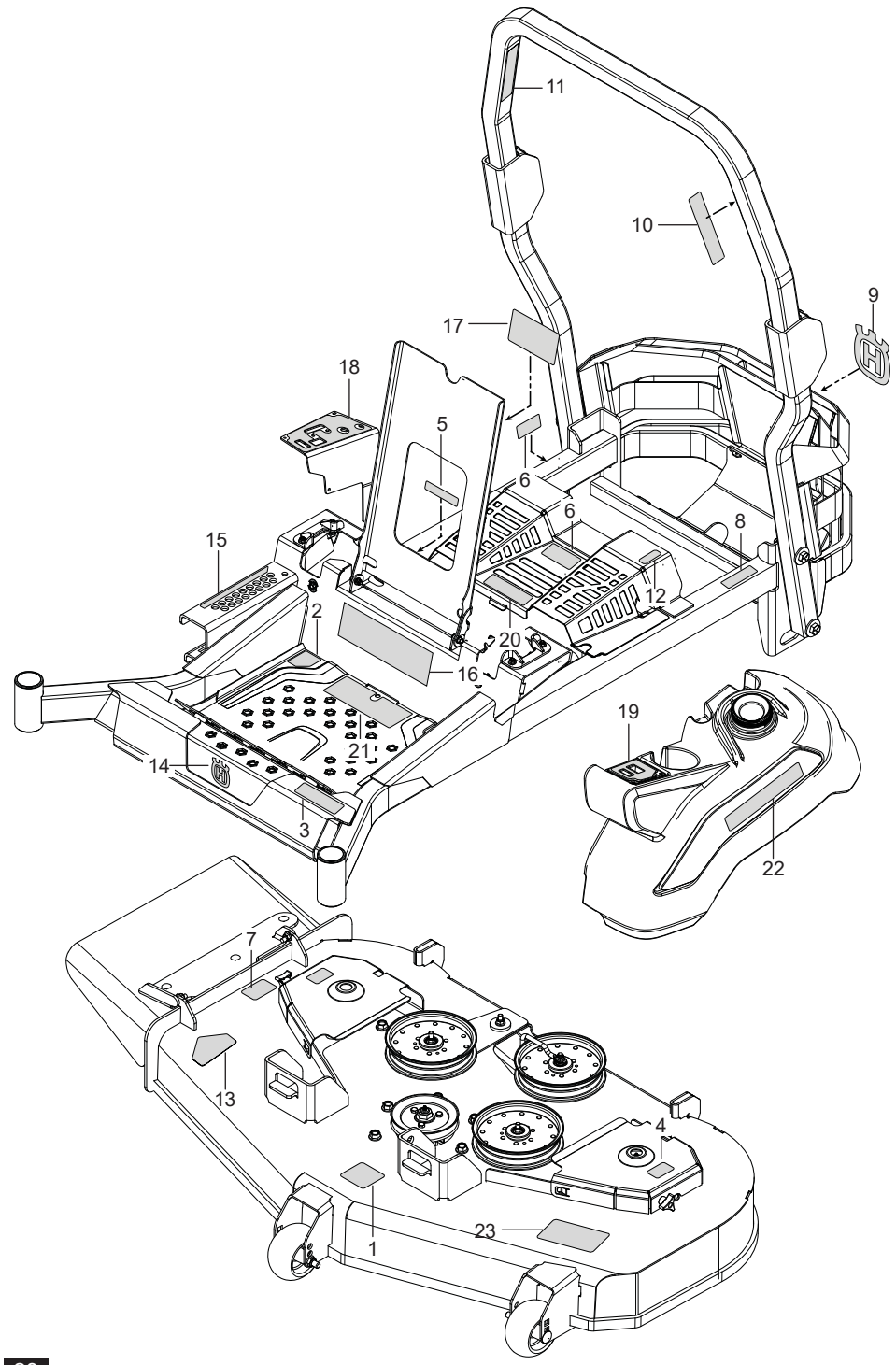


| Ref. | Part No. | Qty | Description | Kit / Assy Includes |
|---|---|---|---|---|
| 4 | 589 80 88-02 | 2 | Bracket, Floorpan | |
| 5 | 589 80 72-02 | 1 | Bracket, Isolator Support Blk | |
| 6 | 589 44 82-02 | 1 | Bracket, Seat Mount Left | |
| 7 | 589 44 82-04 | 1 | Bracket, Seat Mount Right | |
| 8 | 582 48 11-01 | 2 | Bracket, Stop | |
| 9 | 595 32 75-02 | 1 | Panel, Close Out Left Org | |
| 10 | 595 32 75-04 | 1 | Panel, Close Out Right Org | |
| 11 | 582 48 08-03 | 1 | Panel, Wedge Left Org | |
| 12 | 582 48 08-04 | 1 | Panel, Wedge Right Org | |
| 13 | 589 30 46-02 | 1 | Plate, Footrest Org | |
| 14 | 596 69 41-02 | 1 | Plate, Skid Gry | |
| 15 | 582 47 87-01 | 2 | Bumper 5/16-18 | |
| 16 | 575 81 15-01 | 2 | Bumper 1/4-20 x 3/8" Stud | |
| 17 | 522 80 14-01 | 2 | Bumper 1/4-20 Male Stud | |
| 18 | 539 10 25-87 | 2 | Bumper, Grommet | |
| 19 | 589 74 52-02 | 1 | Cover, Front Plate Gry | |
| 20 | 582 48 05-02 | 1 | Cross Member, Front Org | |
| 21 | 589 74 40-01 | 2 | Isolator, Footrest | |
| 22 | 539 10 44-11 | 1 | Knob w/Stud | |
| 23 | 591 34 45-01 | 2 | Knob | |
| 24 | 591 10 17-01 | 2 | Pin w/ Lanyard | |
| 25 | 591 10 16-01 | 2 | Pin, Handle | |
| 26 | 582 46 07-02 | 1 | Plate, Battery | |
| 27 | 582 46 06-02 | 1 | Mount, Battery | |
| 28 | 589 50 07-01 | 1 | Mount, Fuse Box | |
| 29 | 539 10 47-63 | 7 | Retainer 5/16-18 U Type | |
| 30 | 589 80 68-01 | 2 | Retainer 3/8-18 U Type | |
| 31 | 539 11 10-28 | 2 | Nutsert 5/16-18 | |
| 33 | 574 23 38-01 | 2 | Bolt 5/16-18 x 2-1/4 Hex Flange Hd | |
| 34 | 525 54 40-01 | 2 | Bolt 5/16-18 x 1-1/4 Hex Flange Hd Tap | |
| 35 | 817 49 05-16 | 4 | Screw 5/16-18 x 1 HX Wsh Thdr | |
| 36 | 577 11 77-01 | 4 | Bolt 3/8-16 x 3 Hex Flange Hd | |
| 37 | 539 10 01-45 | 2 | Bolt 3/8-16 x 2 Round Hd Square Neck | |
| 38 | 872 14 04-04 | 4 | Bolt 1/4-20 x 1/2 Round Hd Square Neck | |
| 39 | 539 11 56-20 | 2 | Bolt 1/4-20 x 3/4 Round Hd Square Neck | |
| 40 | 539 99 03-16 | 14 | Bolt 5/16-18 x 3/4 Round Hd Square Neck | |
| 41 | 539 99 02-08 | 2 | Bolt 5/16-18 x 1 Round Hd Square Neck | |
| 42 | 539 11 03-03 | 4 | Bolt 5/16 Shoulder | |
| 43 | 580 75 46-01 | 6 | Bolt 5/8-11 x 3-1/2 Hex Hd | |
| 44 | 589 79 72-01 | 2 | Screw 3/8-16 x 1 Button Hd Torx | |
| 45 | 817 49 04-08 | 2 | Screw 1/4-20 x 1/2 Thread Roll | |
| 46 | 585 98 61-01 | 2 | Screw 1-1/4 Shakeproof Black | |
| 47 | 525 82 91-01 | 6 | Nut 5/8-11 Hex Flange Nyloc | |
| 48 | 539 97 69-78 | 6 | Nut 1/4-20 Hex Nyloc | |
| 49 | 521 99 65-01 | 12 | Nut 3/8-16 Hex Flange Nyloc | |
| 50 | 539 11 28-99 | 21 | Nut 5/16-18 Hex Flange Nyloc | |
| 51 | 539 10 26-53 | 4 | Washer 5/8 Std Flat | |
| 52 | 539 10 81-20 | 2 | Nut 1/4-20 Hx Thin Nylc 20 | |
| 53 | 872 14 06-10 | 4 | Bolt Carraige 3/8-16 x 1-1/4 | |
| 54 | 525 54 40-01 | 2 | Hhfs 5/16-18 x 1.25 | |
| 55 | 591 17 66-01 | 2 | Bolt Hex 5/8-11 x 4-1/4 G5 | |
| | NOT SHOWN | | | |
| | 590 87 78-03 | 1 | Kit, ROPS Assy Gry | |

Z 554, 967929801-00

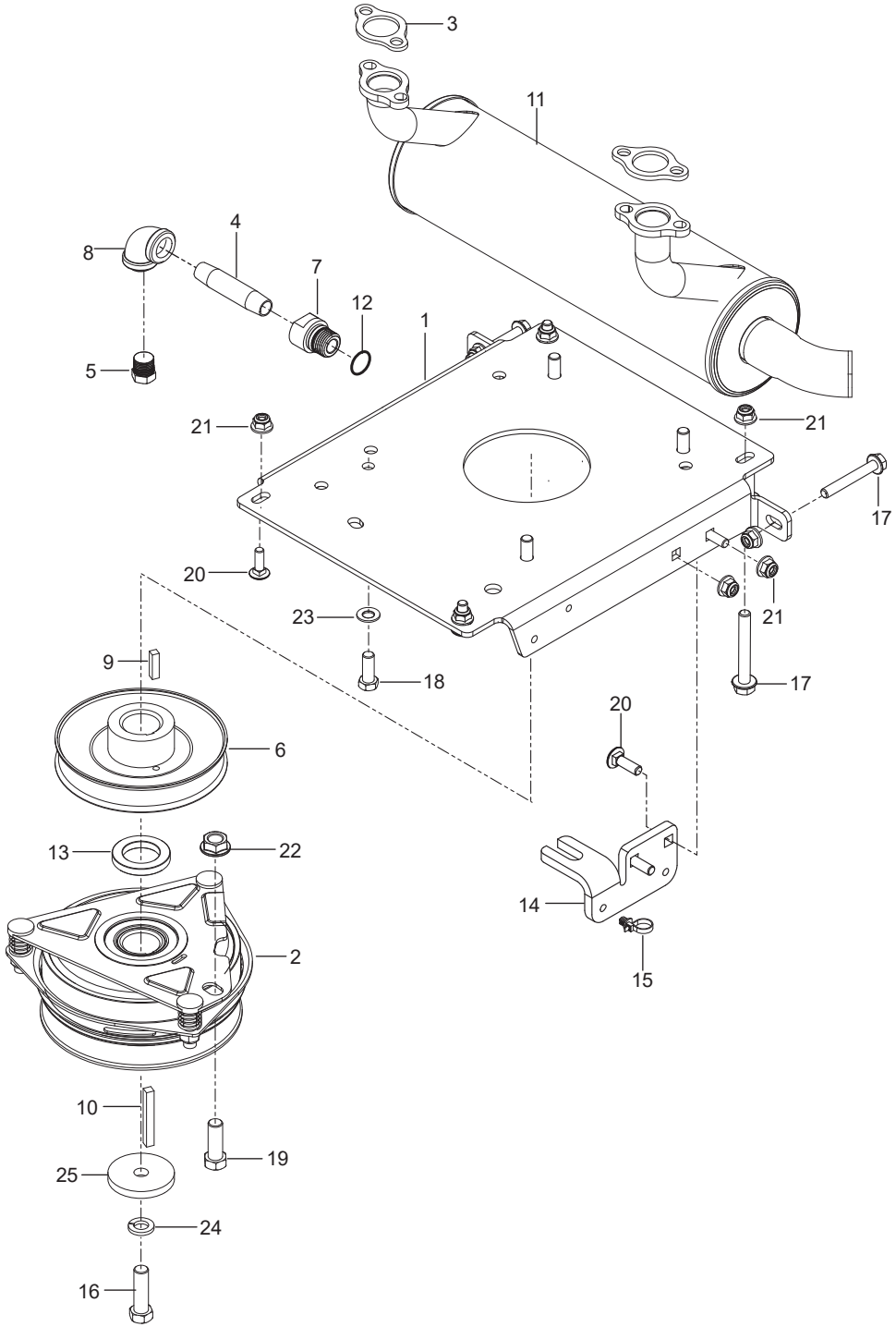


| Ref. | Part No. | Qty | Description | Kit / Assy Includes |
|---|---|---|---|---|
| 1 | 582 46 03-02 | 1 | Assy, Seat Non-Suspension | 12 |
| 2 | 582 47 88-01 | 1 | Bar, Latch Seat | |
| 3 | 582 47 82-01 | 2 | Bracket, Latch | |
| 4 | 590 55 50-02 | 1 | Bracket, Seat Rod | |
| 5 | 590 48 18-01 | 8 | Isolator | |
| 6 | 539 11 63-77 | 4 | Insert, Iso-Mount | |
| 7 | 590 37 35-01 | 1 | Latch, Rotary | |
| 8 | 590 50 68-02 | 1 | Plate, Seat Mount | |
| 9 | 590 50 72-01 | 1 | Rod, Seat | |
| 10 | 539 11 39-52 | 2 | Spring | |
| 11 | 582 47 81-01 | 4 | Coupler 5/16-18 x 1-1/8 Hex | |
| 12 | 532 19 27-49 | 1 | Switch, Seat | |
| 13 | 539 10 83-92 | 4 | Bolt 5/16-18 x 5/8 Hex Hd | |
| 14 | 582 47 89-01 | 2 | Bolt 5/16-18 Threaded x 2-1/2 Shoulder | |
| 15 | 582 47 85-01 | 2 | Bolt 1/4-20 x 1-1/2 Hex Flange Hd Grade 8 | |
| 16 | 539 99 03-16 | 8 | Bolt 5/16-18 x 3/4 Round Hd | |
| 17 | 582 47 86-01 | 2 | Nut 1/4-20 Flange Nyloc Grade 8 | |
| 18 | 539 91 38-47 | 1 | Nut 3/8 Palnut | |
| 19 | 539 11 28-99 | 6 | Nut 5/16-18 Hex Flange Nyloc | |
| 20 | 522 02 34-01 | 2 | Washer 3/8 Thick | |
| 21 | 532 41 35-24 | 8 | Washer 13/32 x 1 x 1/2 | |
| 22 | 539 99 01-18 | 2 | Washer 3/8 Slotted Lock | |
| 23 | 539 99 01-87 | 4 | Washer 5/16 Slotted Lock | |

Z 554, 967929801-00

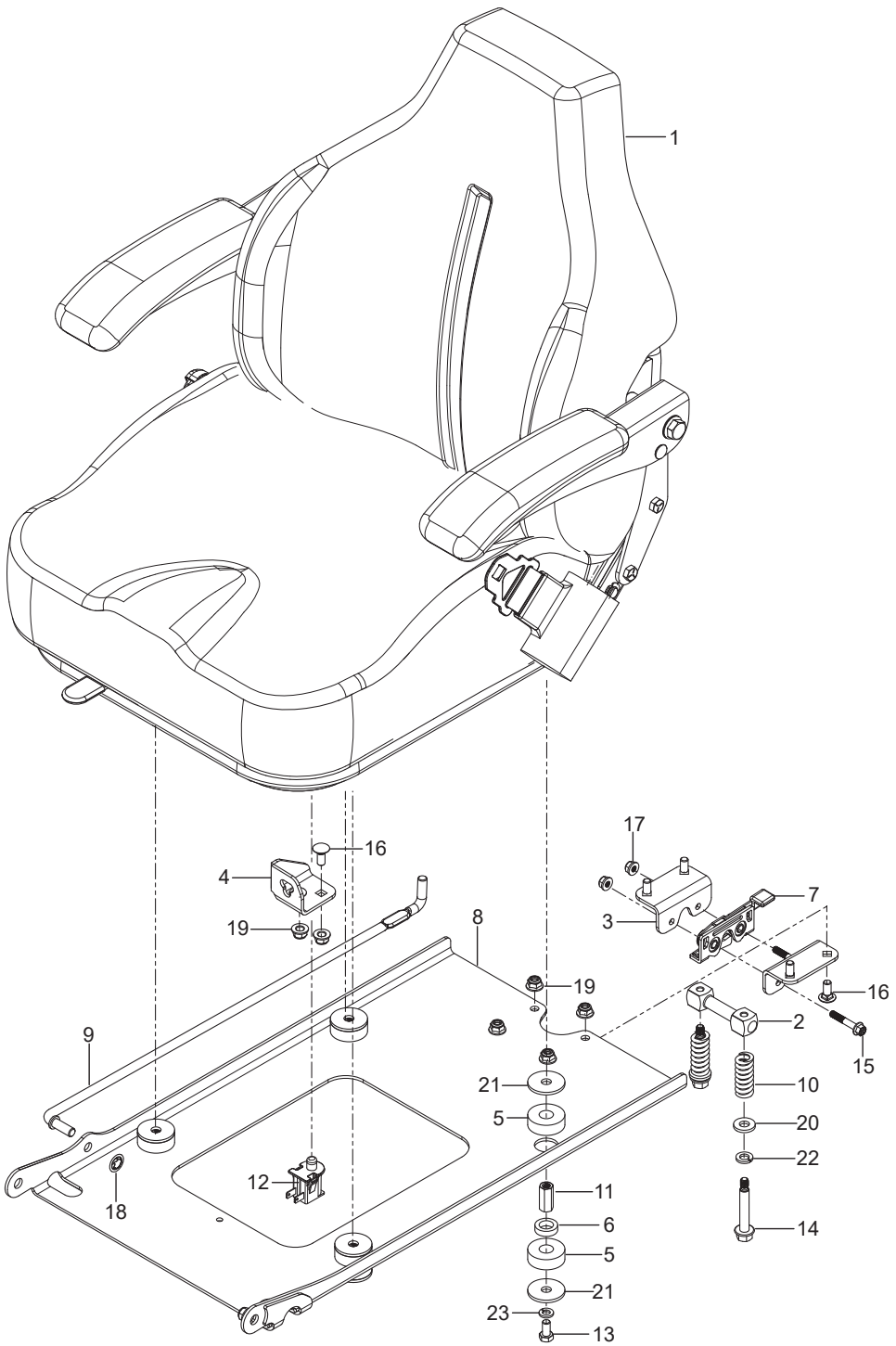


| Ref. | Part No. | Qty | Description | Kit / Assy Includes |
|---|---|---|---|---|
| 1 | 582 73 33-02 | 1 | Plate, Engine | |
| 2 | 539 11 34-37 | 1 | Clutch | |
| 3 | 586 83 97-01 | 2 | Gasket, Exhaust | |
| 4 | 539 11 89-11 | 1 | Pipe 3/8 x 3" | |
| 5 | 522 83 70-01 | 1 | Plug, Drain, 3/8" | |
| 6 | 510 01 98-01 | 1 | Pulley, Engine | |
| 7 | 539 11 96-80 | 1 | Adapter, Oil Drain | |
| 8 | 539 10 50-72 | 1 | Elbow 3/8" NPT | |
| 9 | 539 10 53-08 | 1 | Key 1/4 x 1 | |
| 10 | 539 91 02-10 | 1 | Key 1/4 x 2 | |
| 11 | 525 75 03-01 | 1 | Muffler | |
| 12 | 539 10 96-18 | 1 | O-Ring | |
| 13 | 525 31 39-01 | 1 | Spacer | |
| 14 | 522 67 67-02 | 1 | Stop, Clutch | |
| 15 | 505 28 00-01 | 1 | Tie w/Clip | |
| 16 | 581 33 28-01 | 1 | Bolt 7/16-20 x 1-1/2 Hex Hd Clutch | |
| 17 | 574 23 38-01 | 4 | Bolt 5/16-18 x 2-1/4 Hex Flange Hd | |
| 18 | 539 99 05-63 | 4 | Bolt 3/8-16 x 1 Hex Hd | |
| 19 | 539 10 48-67 | 1 | Bolt 7/16-14 x 1-1/4 Hex Hd | |
| 20 | 539 99 02-08 | 4 | Bolt 5/16-18 x 1 Round Hd Square Neck | |
| 21 | 539 11 28-99 | 8 | Nut 5/16-18 Hex Flange Nyloc | |
| 22 | 539 10 25-82 | 1 | Nut 7/16-14 Hex Whiz Lock | |
| 23 | 539 10 25-93 | 4 | Washer 3/8 Disc Spring Spec | |
| 24 | 539 99 02-47 | 1 | Washer 7/16 Slotted Lock Std | |
| 25 | 539 12 56-26 | 1 | Washer | |
| | NOT SHOWN | | | |
| | 596 20 93-01 | 1 | Engine, Yamaha MX80VH 26 HP<br>For Engine Replacement Parts,<br>See a Yamaha Dealer | |

Z 554, 967929801-00

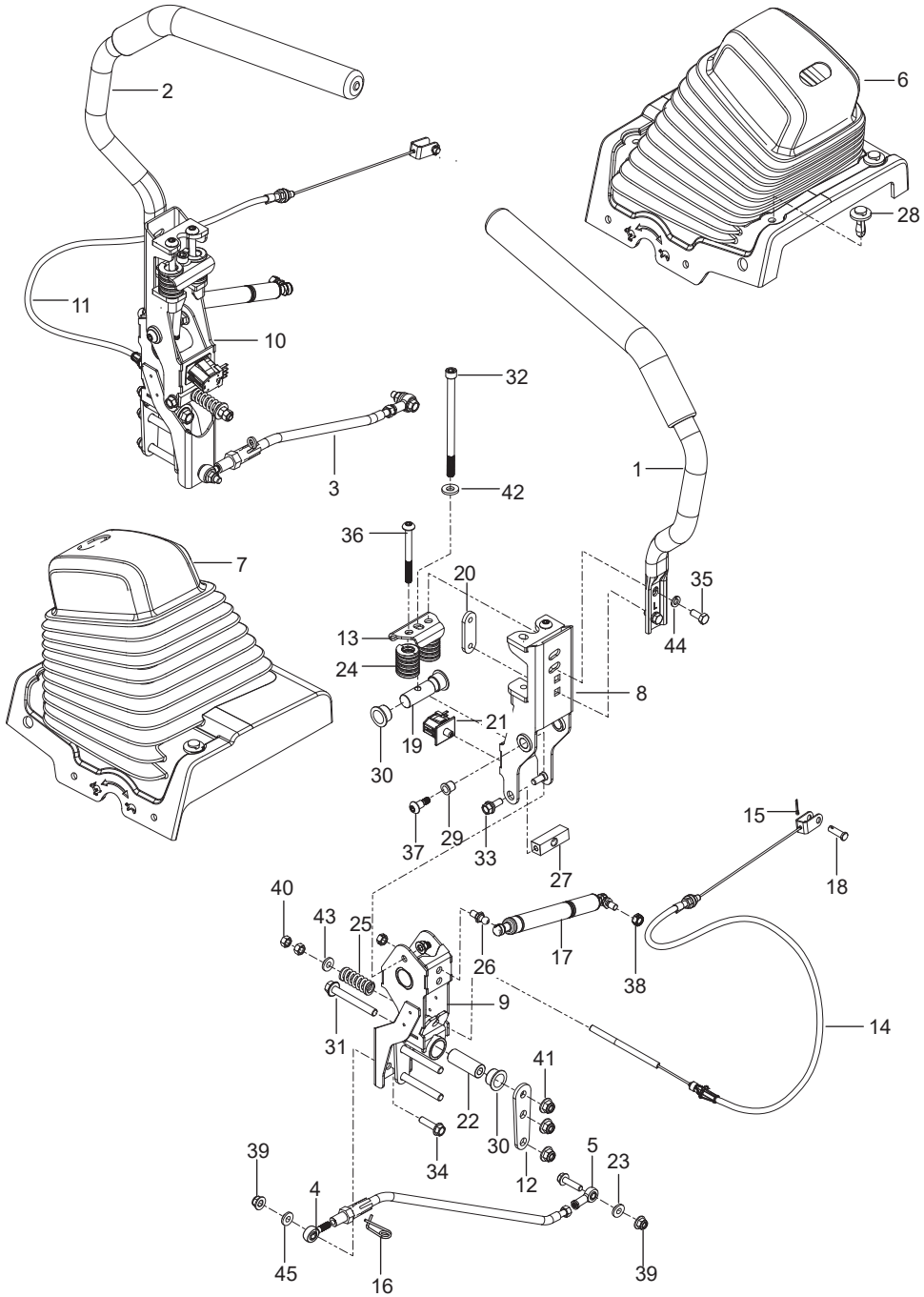


| Ref. | Part No. | Qty | Description | Kit / Assy Includes |
|---|---|---|---|---|
| 1 | 580 94 22-01 | 3 | Hub | |
| 2 | 580 94 21-01 | 3 | Shaft, Spindle | |
| 3 | 580 94 27-01 | 3 | Seal, V Ring | |
| 4 | 580 94 26-01 | 6 | Seal, Shaft | |
| 5 | 583 91 11-01 | 3 | Kit, Bearing w/ Shims | 3, 4 |
| 6 | 580 94 23-01 | 3 | Spacer | |
| 7 | 580 94 25-01 | 3 | Carrier, Seal | |
| 8 | 539 97 69-98 | 3 | Zerk | |
| 9 | 539 97 73-26 | 3 | Valve, Grease Poppet | |
| 10 | 539 13 06-53 | 3 | Nut 3/4-16 Hex Flange | |
| 11 | 580 94 33-05 | 3 | Assembly, Spindle Aluminum | |
| | NOT SHOWN | | | |
| | 574 75 42-01 | 1 | Kit, Bearing Tool<br>When replacing the spindle bearings, also<br>order the Bearing Tool Kit to assure proper installation | |

Z 554, 967929801-00

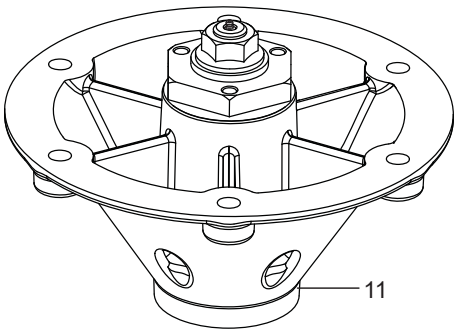


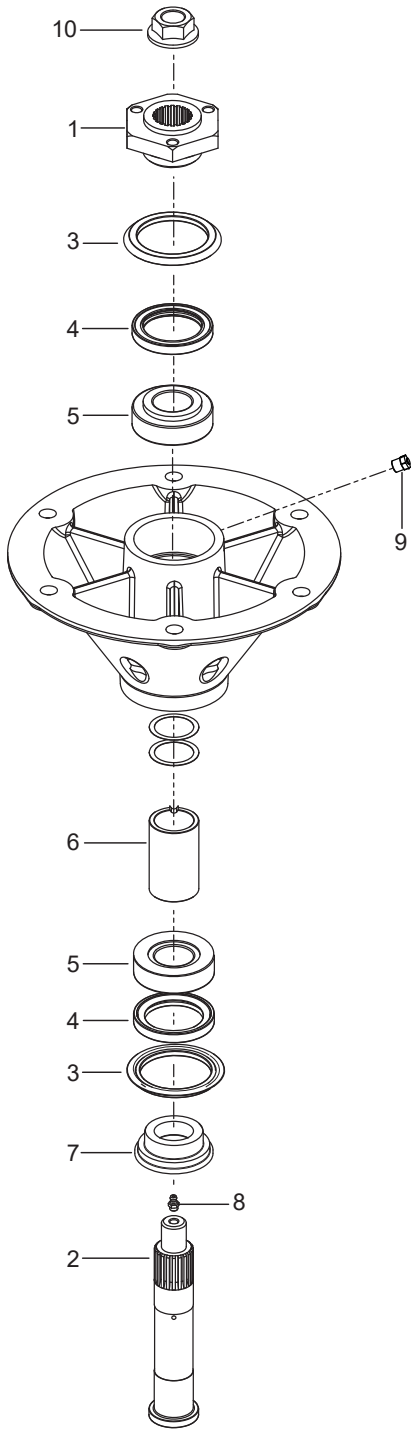


| Ref. | Part No. | Qty | Description | Kit / Assy Includes |
|---|---|---|---|---|
| 1 | 582 47 55-01 | 1 | Lever w/ Grip Left | |
| 2 | 582 47 55-02 | 1 | Lever w/ Grip Right | |
| 3 | 501 56 74-01 | 1 | Assembly, Rod Control Left | 16, 23, 34, 39, 45 |
| | 501 56 75-01 | 1 | Assembly, Rod Control Right | 16, 23, 34, 39, 45 |
| 4 | 588 69 25-02 | 2 | End, Rod Male | |
| 5 | 579 76 46-01 | 2 | End, Rod Female | |
| 6 | 591 19 33-01 | 1 | Bellow Kit, Control Left | 28 |
| 7 | 591 19 33-02 | 1 | Bellow Kit, Control Right | 28 |
| 8 | 592 65 38-01 | 1 | Carrier, Upper w/ Bearings Left | 29 |
| | 592 65 38-02 | 1 | Carrier, Upper w/ Bearings Right | 29 |
| 9 | 582 47 58-02 | 2 | Carrier, Lower | 30 |
| 10 | 592 72 40-01 | 1 | Assembly, Carrier Left w/ Park Brake | without 3, 17 |
| | 592 72 40-02 | 1 | Assembly, Carrier Right w/ Park Brake | without 3, 17 |
| 11 | 592 65 35-01 | 1 | Assembly, Park Brake | 14, 15, 18, 25, 40, 43 |
| 12 | 582 47 51-02 | 4 | Bracket, Control | |
| 13 | 582 47 69-01 | 2 | Bracket, Spring | |
| 14 | 582 47 75-01 | 2 | Cable, Brake | |
| 15 | 532 16 94-84 | 2 | Clip | |
| 16 | 582 55 19-01 | 2 | Clip, Control | |
| 17 | 588 77 54-01 | 2 | Damper | |
| 18 | 582 47 74-01 | 2 | Pin, Clevis | |
| 19 | 589 50 51-01 | 2 | Pivot | |
| 20 | 589 48 96-01 | 2 | Retainer | |
| 21 | 589 50 09-01 | 2 | Switch NC | |
| 22 | 582 47 50-01 | 2 | Spacer, Pivot | |
| 23 | 582 71 13-03 | 2 | Spacer, Step Up | |
| 24 | 582 47 70-01 | 4 | Spring 1-1/4 x 5 | |
| 25 | 532 15 13-32 | 2 | Spring, Brake | |
| 26 | 539 11 06-07 | 4 | Stud 10mm Ball | |
| 27 | 582 47 72-01 | 2 | Yoke, Brake Cable | |
| 28 | 582 48 29-01 | 10 | Rivet Pin | |
| 29 | 582 47 68-01 | 4 | Bearing 1/2 Flange | |
| 30 | 539 13 15-18 | 8 | Bearing, Flange | |
| 31 | 577 11 77-01 | 6 | Bolt 3/8-16 x 3 Hex Flange Hd | |
| 32 | 589 50 56-01 | 2 | Bolt 3/8-16 x 6 | |
| 33 | 539 11 03-03 | 4 | Bolt 5/16 Shoulder | |
| 34 | 525 54 40-01 | 4 | Bolt 5/16-18 x 1-1/4 Hex Flange Hd | |
| 35 | 539 97 69-34 | 4 | Bolt 5/16-18 x 3/4 Hex Hd | |
| 36 | 582 47 71-01 | 4 | Bolt 5/16-18 x 3-1/2 Torx | |
| 37 | 582 47 64-01 | 2 | Bolt 5/16-18 3/8 x 1/2 Shoulder | |
| 38 | 539 99 01-84 | 4 | Nut 5/16-18 Hex Center Lock | |
| 39 | 539 11 28-99 | 8 | Nut 5/16-18 Hex Flange Nyloc | |
| 40 | 539 99 02-23 | 4 | Nut 5/16-24 Hex | |
| 41 | 521 99 65-01 | 6 | Nut 3/8-16 Hex Flange Nyloc | |
| 42 | 522 02 34-01 | 2 | Washer 3/8 Thick | |
| 43 | 539 99 06-92 | 2 | Washer 5/16 Std Flat | |
| 44 | 539 99 01-87 | 4 | Washer 5/16 Lock | |
| 45 | 819 11 11-16 | 2 | Washer 11/32 16 Gauge | |

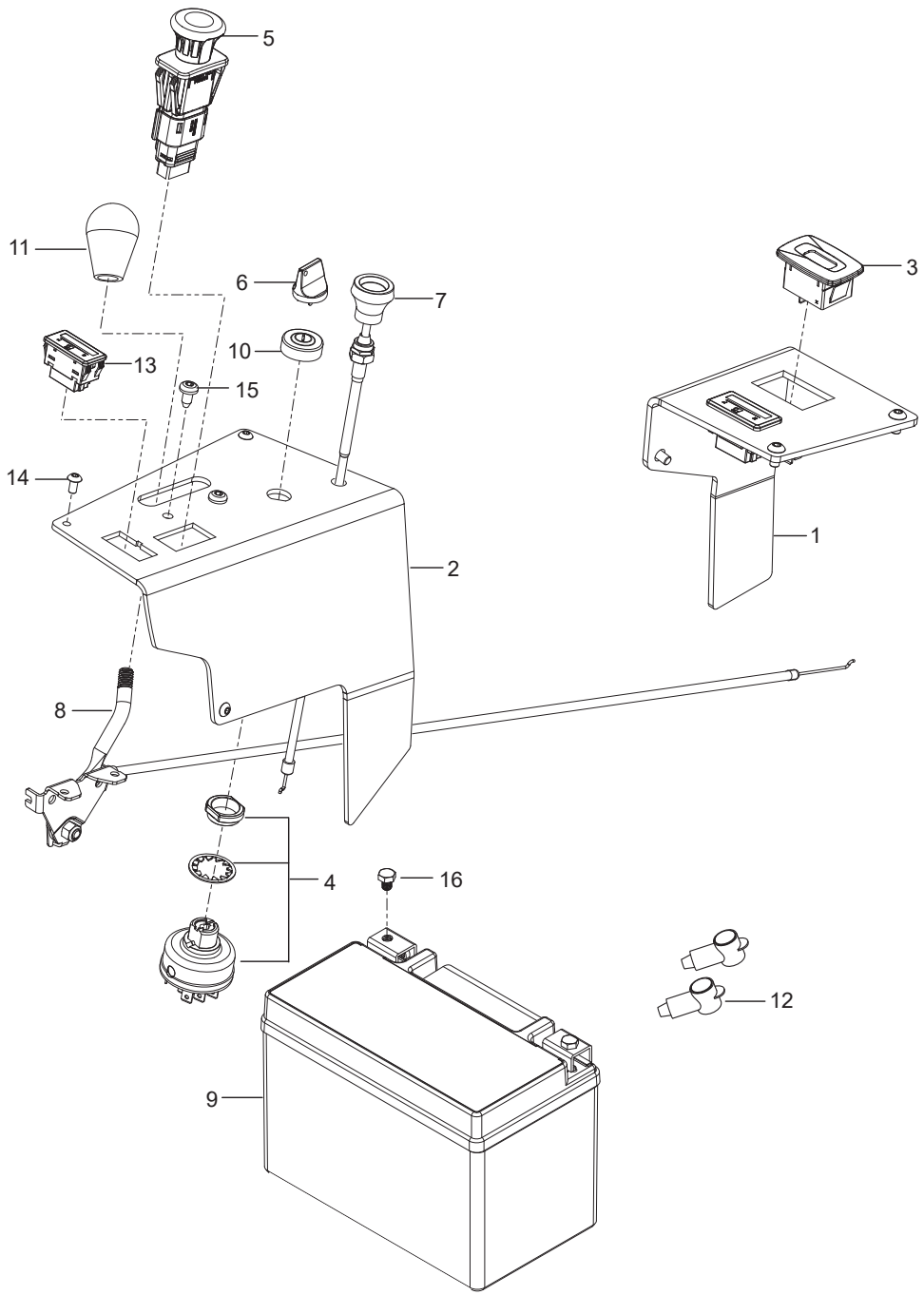


Z 554, 967929801-00

| Ref. | Part No. | Qty | Description | Kit / Assy Includes |
|---|---|---|---|---|
| 1 | 591 35 97-02 | 1 | Deck w/ Safety Decals | |
| 2 | 588 26 48-05 | 1 | Belt, Deck | |
| 3 | 581 05 55-02 | 3 | Blade, Hi-Lift | |
| 4 | 582 46 27-02 | 1 | Arm, Idler | |
| 5 | 521 97 97-01 | 3 | Pulley, Deck | |
| 6 | 510 01 51-01 | 3 | Pulley, Idler | |
| 7 | 582 46 30-03 | 1 | Shield, Belt Left | |
| 8 | 582 46 30-06 | 1 | Shield, Belt Right | |
| 9 | 582 46 88-01 | 1 | Shield, Deflector | |
| 10 | 510 25 45-01 | 3 | Shield, Dust | |
| 11 | 574 16 96-01 | 2 | Roller, Gauge | |
| 12 | 574 19 64-01 | 2 | Tube, Roller Axle | |
| 13 | 510 43 75-02 | 1 | Baffle | |
| 14 | 539 13 15-18 | 2 | Bearing, Flange | |
| 15 | 510 26 37-01 | 2 | Bearing, Idler Arm | |
| 16 | 582 46 73-02 | 1 | Bracket, Deflector Org | |
| 17 | 582 46 32-07 | 1 | Bracket, Pulley Cover Left | |
| 18 | 582 46 32-08 | 1 | Bracket, Pulley Cover Right | |
| 19 | 594 91 33-02 | 1 | Guard, Belt | |
| 20 | 582 47 02-01 | 1 | Keeper, Belt | |
| 21 | 539 10 44-11 | 2 | Knob w/ Stud | |
| 22 | 590 52 37-02 | 1 | Plate, Backing Discharge Blk | |
| 23 | 582 46 64-01 | 1 | Plate, Spring Retainer | |
| 24 | 582 46 81-01 | 1 | Shaft Mount Arm Idler | |
| 25 | 582 46 83-01 | 1 | Spacer | |
| 26 | 589 45 52-01 | 1 | Spacer, Pulley | |
| 27 | 582 46 80-01 | 1 | Spring, Deck Idler | |
| 28 | 539 10 47-63 | 2 | Retainer 5/16-18 U Type | |
| 29 | 574 20 20-01 | 1 | Eyebolt 3/8 x 4 | |
| 30 | 539 11 56-20 | 4 | Bolt 1/4-20 x 3/4 Round Hd Square Neck | |
| 31 | 872 14 06-10 | 3 | Bolt 3/8-16 x 1-1/4 Round Hd Square Neck | |
| 32 | 510 02 23-01 | 2 | Bolt 1/2-13 x 4-3/4 Round Hd Square Neck | |
| 33 | 872 14 06-28 | 1 | Bolt 3/8-16 x 3-1/2 Round Hd Square Neck | |
| 34 | 874 49 06-44 | 2 | Bolt 3/8-16 x 2-3/4 Hex Flange Hd | |
| 35 | 574 21 06-01 | 18 | Bolt 1/2-13 x 1 Hex Flange Hd | |
| 36 | 525 61 28-01 | 2 | Bolt 3/8-16 x 1 Hex Flange Hd | |
| 37 | 521 99 66-01 | 1 | Bolt 3/8-16 x 4 Hex Flange Hd | |
| 38 | 582 47 64-01 | 4 | Bolt 5/16-18 3/8 x 1/2 Shoulder | |
| 39 | 539 13 03-15 | 9 | Bolt 5/16-18 x 1/2 Hex Hd | |
| 40 | 539 11 90-07 | 3 | Bolt/Washer, Blade | |
| 41 | 539 91 38-47 | 1 | Nut 3/8 Retaining Blk | |
| 42 | 521 99 65-01 | 10 | Nut 3/8-16 Hex Flange Nyloc | |
| 43 | 539 11 28-99 | 7 | Nut 5/16-18 Hex Flange Nyloc | |
| 44 | 521 99 11-01 | 2 | Nut 1/2-13 Hex Flange Nyloc | |
| 45 | 539 10 93-32 | 1 | Nut 3/8-16 Hex Jam | |
| 46 | 539 97 69-78 | 4 | Nut 1/4-20 Hex Nyloc | |
| 47 | 539 10 65-04 | 2 | Washer, Harden | |
| 48 | 539 10 96-00 | 9 | Washer 5/16 Disc Spring | |

Z 554, 967929801-00

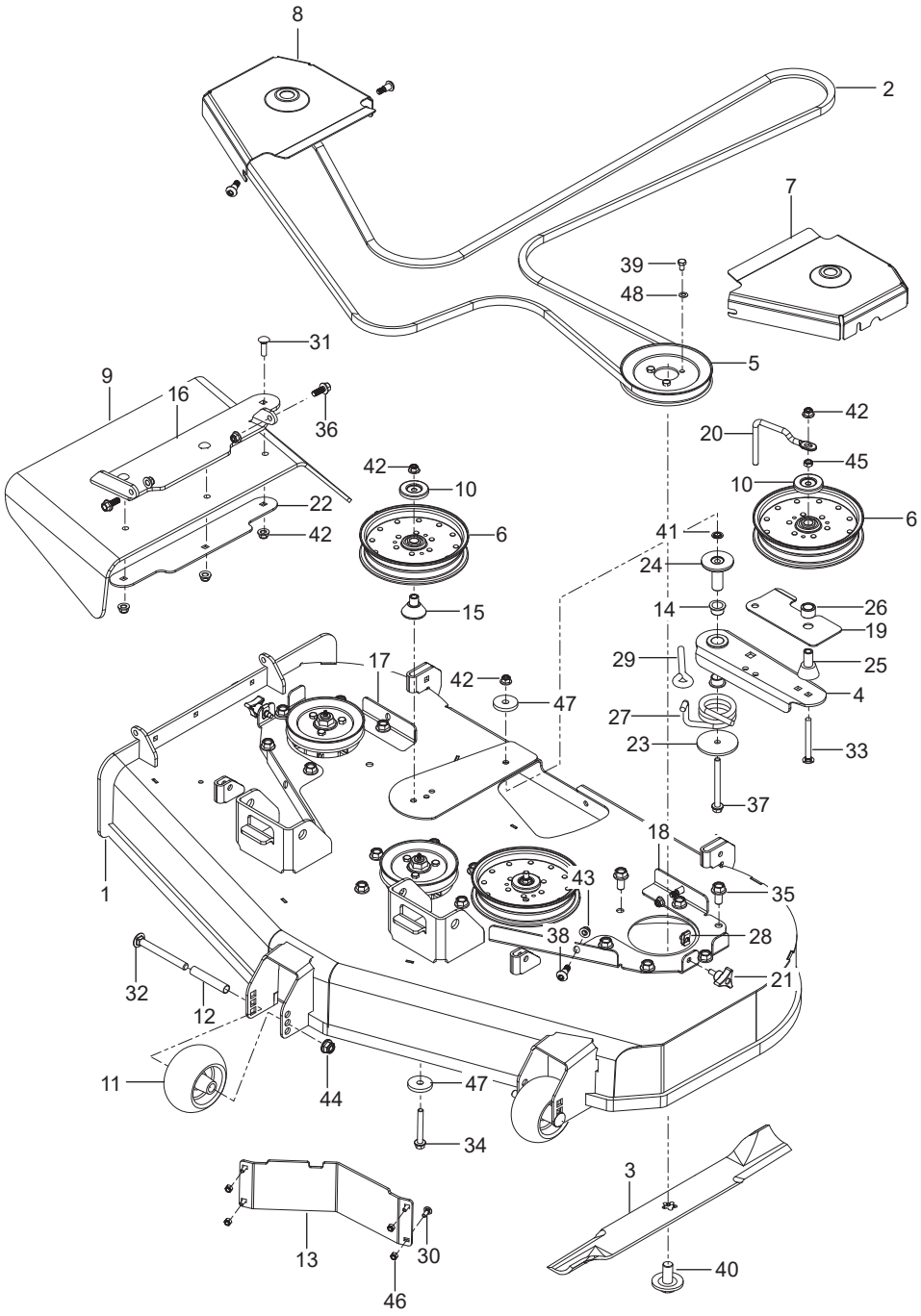


| Ref. | Part No. | Qty | Description | Kit / Assy Includes |
|---|---|---|---|---|
| 1 | 582 48 39-02 | 1 | Panel, Control Left Gry | |
| 2 | 582 48 36-02 | 1 | Panel, Control Right Gry | |
| 3 | 586 16 18-01 | 1 | Meter, Service | |
| 4 | 574 45 54-01 | 1 | Switch, Ignition | |
| 5 | 589 88 72-01 | 1 | Switch, Blade | |
| 6 | 574 45 55-01 | 1 | Key, Ignition | |
| 7 | 574 20 69-01 | 1 | Control, Choke 48" | |
| 8 | 582 12 03-01 | 1 | Control, Throttle 46" | |
| 9 | 589 81 95-01 | 1 | Battery, 12V | |
| 10 | 539 10 31-78 | 1 | Cap, Switch | |
| 11 | 539 13 26-24 | 1 | Knob | |
| 12 | 539 10 27-59 | 2 | Insulator | |
| 13 | 592 87 27-01 | 2 | Gauge, Fuel | |
| 14 | 539 11 43-41 | 6 | Screw #10-24 x 3/8 Socket Head | |
| 15 | 532 19 98-55 | 2 | Screw 1/4-20 Panhead | |
| 16 | 582 46 08-01 | 2 | Screw M6 x 8MM Hex | |
| | NOT SHOWN | | | |
| | 593 77 78-01 | 1 | Harness, Main (Carb) | |
| | 589 83 85-01 | 1 | Harness, Engine Adapter | |
| | 574 51 40-01 | 1 | Harness, Seat Timer | |
| | 590 63 21-01 | 1 | Cables, Battery Red/Blk | |

Z 554, 967929801-00

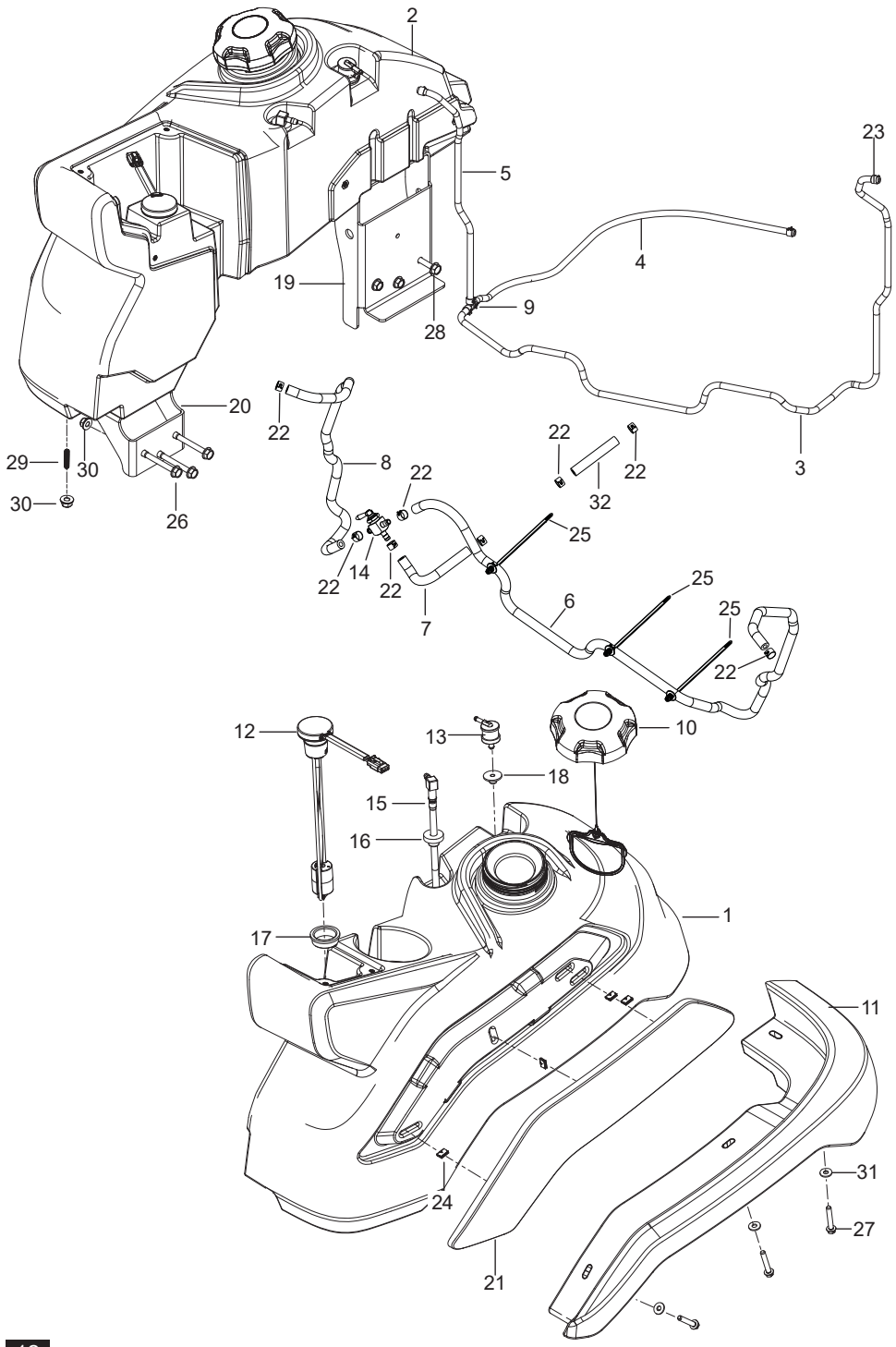


| Ref. | Part No. | Qty | Description | Kit / Assy Includes |
|---|---|---|---|---|
| 3 | 582 46 54-02 | 2 | Arm, Deck Lift Inner Blk | |
| 4 | 582 46 39-02 | 2 | Arm, Deck Lift Outer Blk | |
| 5 | 582 46 20-01 | 1 | Arm, Drawbar Left | |
| 6 | 582 46 20-02 | 1 | Arm, Drawbar Right | |
| 7 | 582 46 46-01 | 2 | Rod Connecting | |
| 8 | 582 47 28-01 | 1 | Rod Height Gauge | |
| 9 | 582 47 14-01 | 1 | Rod Release Connecting Toe | |
| 10 | 510 40 83-01 | 1 | Pedal, Deck Height | |
| 11 | 510 08 95-01 | 1 | Pedal, Deck Release | |
| 12 | 510 02 39-02 | 4 | Block, Pillow | |
| 13 | 582 46 72-01 | 1 | Block, Rod End | |
| 14 | 582 46 69-02 | 1 | Bracket, Height Org | |
| 15 | 582 46 89-02 | 2 | Bracket, Pillow Block Black | |
| 16 | 582 47 27-02 | 1 | Lever, Spring Left | |
| 17 | 592 65 41-01 | 1 | Lever, Lock w/ Bearing | |
| 18 | 539 10 96-93 | 2 | Chain 3" 3 Link Lift | |
| 19 | 539 10 26-41 | 2 | Chain 5" 3 Link Lift | |
| 20 | 582 46 48-01 | 2 | Pivot 3" Connecting Rod | |
| 21 | 582 76 39-02 | 1 | Plate, Height Gauge | |
| 22 | 589 45 32-01 | 1 | Assy, Release Pedal | 11, 31 |
| 23 | 582 46 90-01 | 2 | Shackle, Chain | |
| 24 | 582 46 42-01 | 2 | Trunnion | |
| 25 | 582 46 91-01 | 2 | Spring, Lift | |
| 26 | 582 47 13-01 | 1 | Spring, Torsion | |
| 27 | 582 46 70-01 | 1 | Swivel, Height Bar | |
| 28 | 582 46 71-01 | 1 | Swivel, Top Release | |
| 29 | 582 46 99-01 | 2 | Bushing 1-3/8 Deck Inner | |
| 30 | 582 46 98-01 | 2 | Bushing 1-1/2 Deck Outer | |
| 31 | 510 08 92-01 | 5 | Bushing 3/4 x 1 Sleeve | |
| 32 | 539 91 27-30 | 1 | E-Ring 1/2 | |
| 33 | 539 99 08-70 | 2 | E-Ring 3/8 | |
| 34 | 590 46 55-01 | 1 | Pin 3-1/2 Height Adjust | |
| 35 | 539 10 28-89 | 2 | Pin 1/8 x 2 Cotter | |
| 36 | 582 46 67-01 | 4 | Bolt 3/4-10 x 7-1/2 Socket Hd | |
| 37 | 582 47 26-01 | 2 | Screw Button Head Cap 3/8-16 x 1 | |
| 38 | 574 20 20-01 | 2 | Bolt 3/8 x 4 Eye | |
| 39 | 539 99 08-58 | 1 | Screw Thdrl 5/16-18 x 1/2 | |
| 40 | 589 78 60-01 | 4 | Bolt 3/8-16 x 3-3/4 Grade 8 | |
| 41 | 501 06 41-02 | 3 | Bolt 5/16-18 x 1 Shoulder | |
| 42 | 501 06 41-01 | 4 | Bolt 5/16-18 x 7/8 Shoulder | |
| 43 | 510 40 82-01 | 1 | Bolt 1/2-13 x 2-1/2 Shoulder | |
| 44 | 539 10 11-75 | 4 | Bolt 7/16-14 x 1-1/2 Hex Hd | |
| 45 | 582 46 56-01 | 2 | Bolt 7/16-14 x 4-1/2 Square Hd Grade 8 | |
| 46 | 589 67 77-01 | 3 | Nut 5/8-11 Hex Thin Nyloc | |
| 48 | 539 99 05-46 | 2 | Nut 3/8-16 Hex Center Lock | |
| 49 | 539 11 91-24 | 4 | Nut 7/16-14 Hex Nyloc | |
| 50 | 539 11 03-40 | 3 | Nut 5/8-11 Nyloc | |
| 51 | 521 99 65-01 | 6 | Nut 3/8-16 Hex Flange Nyloc | |
| 52 | 539 11 28-99 | 2 | Nut 5/16-18 Hex Flange Nyloc | |
| 53 | 539 13 20-19 | 4 | Nut 7/16-14 Hex Whiz Lock | |
| 54 | 582 46 66-01 | 4 | Nut 3/4-10 Hex Flange Nyloc | |
| 55 | 539 10 87-32 | 2 | Nut 3/8-24 Hex Jam Unf | |
| 56 | 819 21 16-16 | 2 | Washer 21/32 x 1 x 16 Ga | |

Z 554, 967929801-00

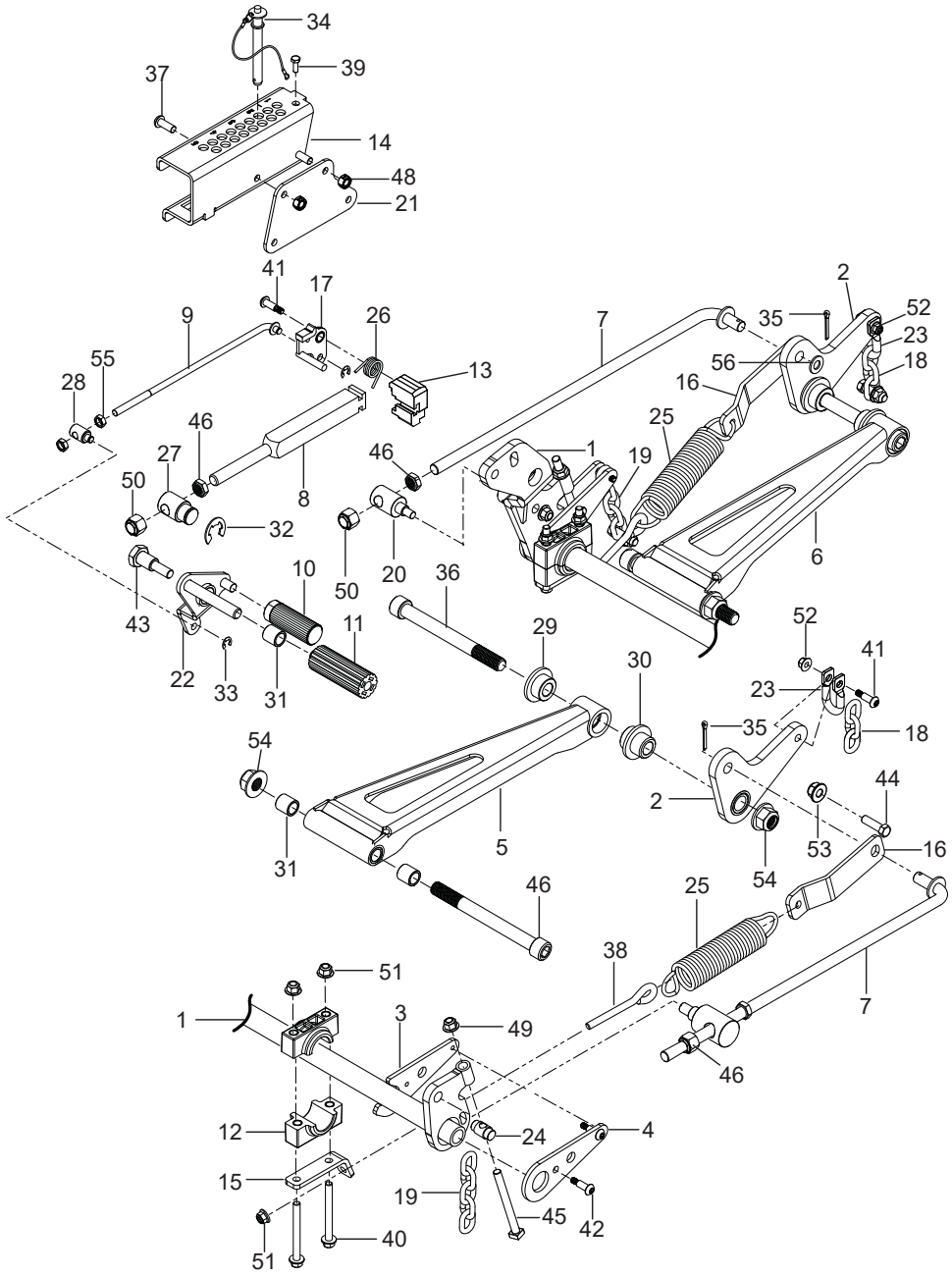


| Ref. | Part No. | Qty | Description | Kit / Assy Includes |
|---|---|---|---|---|
| 1 | 582 46 26-02 | 1 | Shaft, Front Deck Lift | |
| 2 | 592 65 40-02 | 2 | Arm, Bell Crank Rear w/ Bearing RT | |
| | 592 65 40-01 | 1 | Arm, Bell Crank/Bushing LT | |

| Ref. | Part No. | Qty | Description | Kit / Assy Includes |
|---|---|---|---|---|
| 1 | 582 48 31-05 | 1 | Assy, Tank Left | 10, 12, 13, 15, 16, 17, 18 |
| 2 | 582 48 17-05 | 1 | Assy, Tank Right | 10, 12, 13, 15, 16, 17, 18 |
| 3 | 587 04 45-41 | 1 | Hose 3/16 x 41" Vapor | |
| 4 | 587 04 45-23 | 1 | Hose 3/16 x 23" Vapor | |
| 5 | 587 04 45-17 | 1 | Hose 3/16 x 17" Vapor | |
| 6 | 587 04 48-41 | 1 | Hose 1/4 x 41" Fuel | |
| 7 | 587 04 48-07 | 1 | Hose 1/4 x 7" Fuel | |
| 8 | 587 04 48-24 | 1 | Hose 1/4 x 24" Fuel | |
| 9 | 574 20 66-02 | 1 | Tee 3/16 Fuel Line | |
| 10 | 575 01 81-01 | 2 | Cap, Fuel | |
| 11 | 582 48 33-01 | 1 | Guard, Mud Left | |
| | 582 48 23-01 | 1 | Guard, Mud Right | |
| 12 | 590 63 88-01 | 2 | Sensor, Fuel Level | |
| 13 | 576 61 81-01 | 2 | Valve, Roll Over | |
| 14 | 539 10 26-79 | 1 | Valve, Fuel | |
| 15 | 525 86 54-02 | 1 | Assy, Fuel Tube Left | |
| | 525 86 54-03 | 1 | Assy, Fuel Tube Right | |
| 16 | 532 00 36-45 | 2 | Grommet, Fuel | |
| 17 | 590 20 91-01 | 2 | Grommet, Fuel Sensor | |
| 18 | 584 64 82-01 | 2 | Grommet, Valve | |
| 19 | 582 48 15-02 | 2 | Bracket, Tank Rear | |
| 20 | 582 48 16-02 | 2 | Support, Fuel Tank Front | |
| 21 | 582 48 34-01 | 1 | Cover, Fuel Tank Left | |
| | 582 48 24-01 | 1 | Cover, Fuel Tank Right | |
| 22 | 539 91 22-22 | 8 | Clamp, Hose | |
| 23 | 575 43 65-01 | 6 | Clamp, Hose | |
| 24 | 582 48 26-01 | 8 | Clip | |
| 25 | 591 36 71-01 | 5 | Tie w/ Clip | |
| 26 | 874 49 05-48 | 6 | Bolt 5/16-18 x 3 Hex Flange Head | |
| 27 | 590 25 73-01 | 6 | Screw 1/4-20 x 1-1/2 Hex Head | |
| 28 | 817 49 05-16 | 6 | Screw 5/16-18 x1 Hex Washer | |
| 29 | 582 48 42-01 | 8 | Screw 5/16-18 x 1-1/4 Set | |
| 30 | 539 11 28-99 | 20 | Nut 5/16-18 Hex Flange Nyloc | |
| 31 | 532 12 66-84 | 6 | Washer, Shim | |
| 32 | 587 04 48-03 | 1 | Hose 1/4" Low Perm Fuel | |

Z 554, 967929801-00

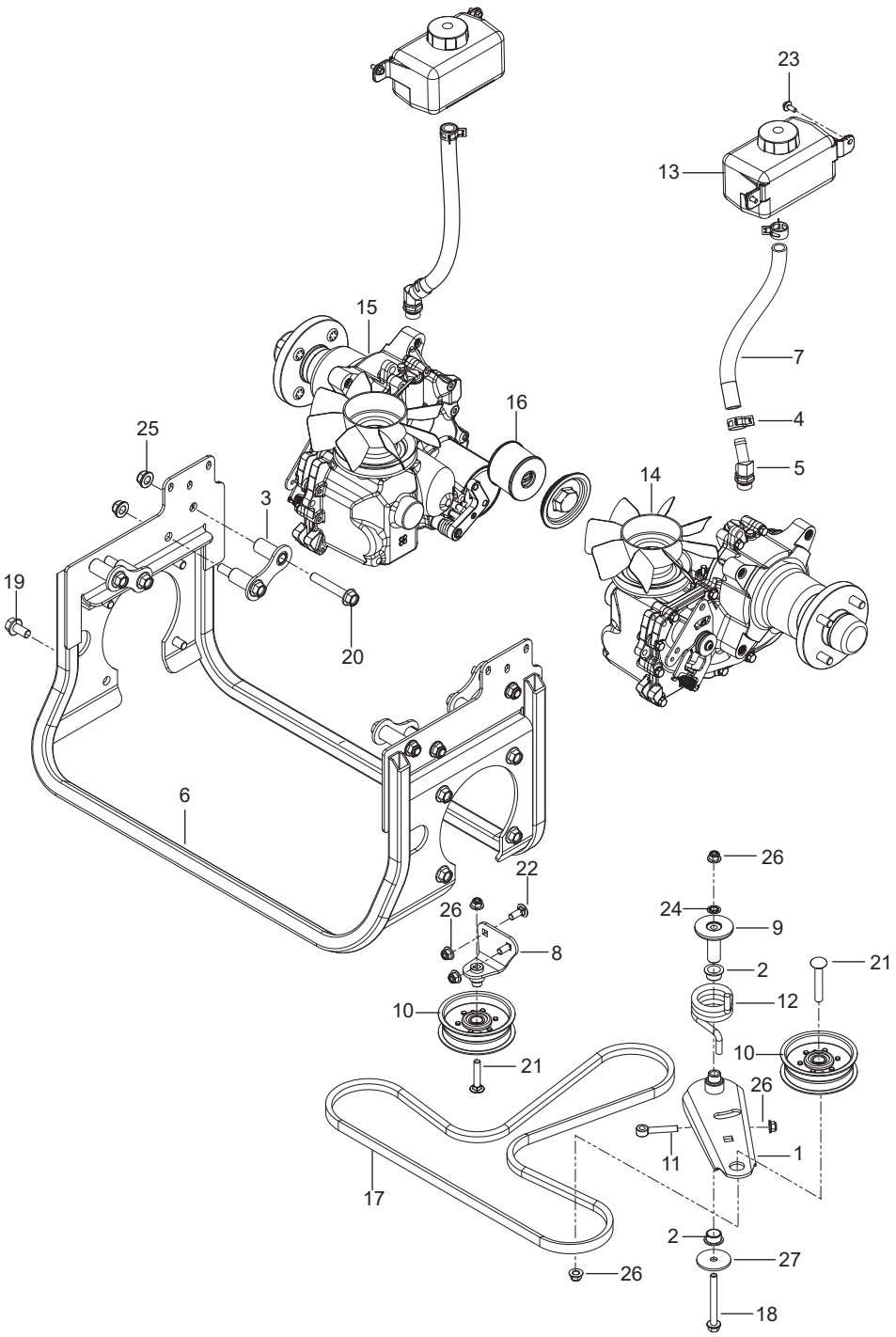


| Ref. | Part No. | Qty | Description | Kit / Assy Includes |
|---|---|---|---|---|
| 1 | 539 10 55-21 | 2 | Assembly, Tire 13 x 6.5 | |
| | 539 10 55-22 | 2 | Tire 13 x 6.5 Caster | |
| | 539 10 55-23 | 2 | Rim Caster | |
| 2 | 522 90 51-01 | 2 | Assembly, Tire 23 x 10.5 | |
| | 522 90 51-03 | 2 | Tire 23 x 10.5 Turf Master | |
| | 522 90 51-02 | 2 | Rim 12 X 8.5 Neg Offset | |
| 3 | 525 61 19-02 | 2 | Yoke, Caster, Org | |
| 4 | 510 03 40-01 | 2 | Cap, Dust | |
| 5 | 510 03 43-01 | 2 | Seal, Bearing | |
| 6 | 510 03 44-03 | 4 | Cone | |
| 7 | 539 10 14-74 | 2 | Zerk | |
| 8 | 590 69 07-01 | 4 | Spacer, Axle | |
| 9 | 590 70 49-01 | 2 | Spacer, Hub | |
| 10 | 539 10 55-17 | 2 | Bolt 1/2-13 x 9-1/2 Hex Nyloc | |
| 11 | 522 84 26-01 | 2 | Nut 3/4-16 Hex Thin Nyloc | |
| 12 | 587 65 39-02 | 8 | Nut 1/2-20 Lug Grade 8 | |
| 13 | 521 99 11-01 | 2 | Nut 1/2-13 Hex Flg Nyloc | |
| 14 | 539 99 02-50 | 2 | Washer 1/2 SAE | |
| 15 | 574 82 47-01 | 2 | Washer 3/4 Hardened | |

Z 554, 967929801-00

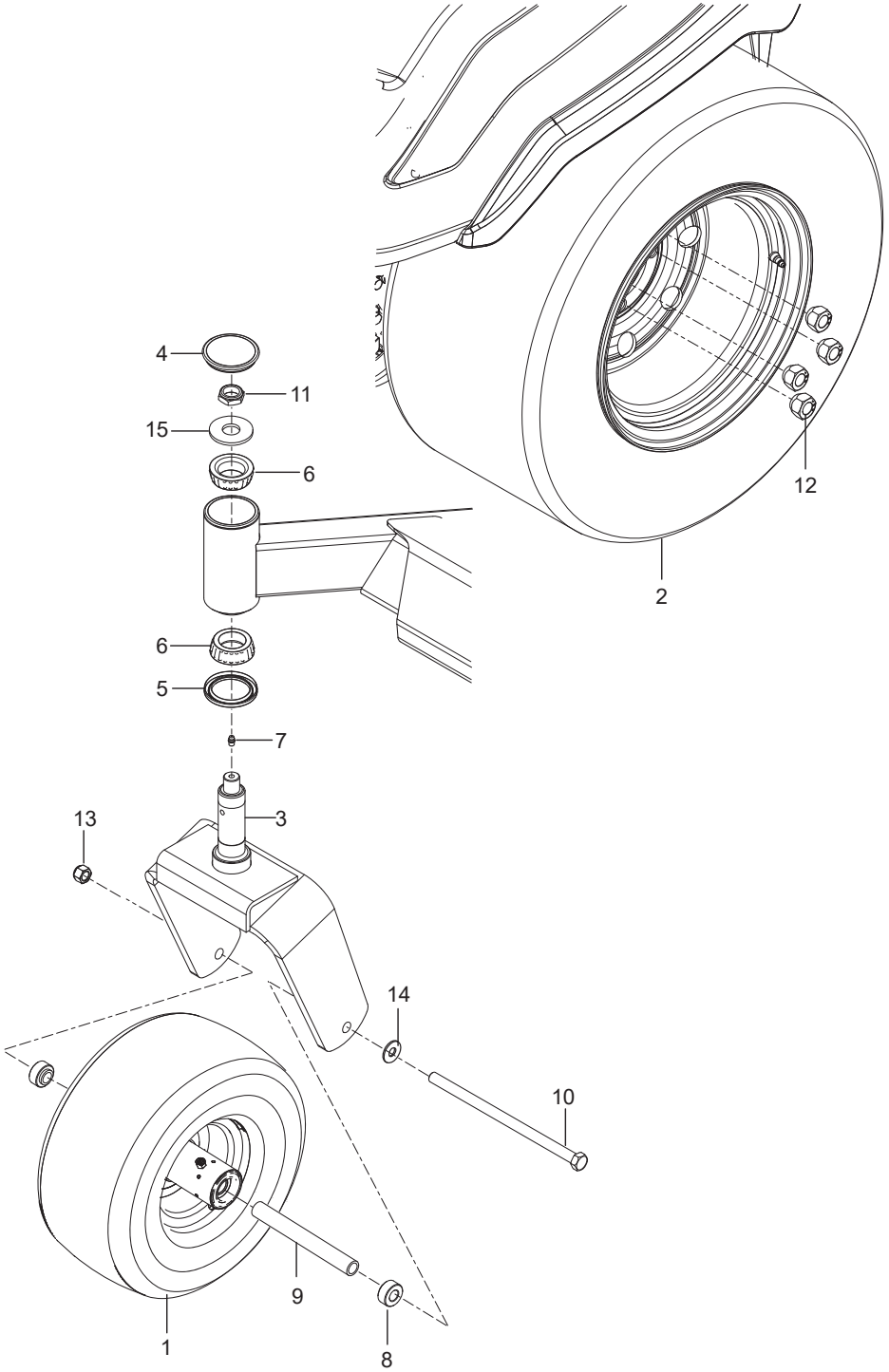


| Ref. | Part No. | Qty | Description | Kit / Assy Includes |
|---|---|---|---|---|
| 1 | 582 46 31-02 | 1 | Arm, Idler | |
| 2 | 501 60 37-01 | 2 | Bearing, Flanged | |
| 3 | 582 47 91-02 | 4 | Bracket | |
| 4 | 582 48 01-01 | 4 | Clamp 15/16" | |
| 5 | 582 48 03-01 | 2 | Fitting 45° | |
| 6 | 582 47 94-02 | 1 | Frame | |
| 7 | 582 48 02-03 | 2 | Hose 5/8" | |
| 8 | 586 93 38-02 | 1 | Mount, Idler | |
| 9 | 582 46 81-01 | 1 | Mount, Idler Arm | |
| 10 | 587 65 41-01 | 2 | Pulley, Idler | |
| 11 | 582 71 62-01 | 1 | Rod End 3/8-16 x 3 | |
| 12 | 582 46 84-01 | 1 | Spring, Torsion | |
| 13 | 574 49 92-01 | 2 | Tank, Expansion w/ Cap | |
| 14 | 588 74 89-01 | 1 | Transmission ZT-4400 Left | |
| 15 | 588 74 89-02 | 1 | Transmission ZT-4400 Right | |
| 16 | 576 12 72-01 | 1 | Filter w/ O-Ring | |
| 17 | 582 48 04-01 | 1 | V-Belt | |
| 18 | 874 49 06-52 | 1 | Bolt 3/8-16 x 3-1/2 Hex Flange Hd | |
| 19 | 574 21 06-01 | 8 | Bolt 1/2-13 x 1 Hex Flange Hd | |
| 20 | 874 49 08-48 | 8 | Bolt 1/2-13 x 3 Gd 5 Zd | |
| 21 | 539 10 01-45 | 2 | Bolt 3/8-16 x 2 Round Hd | |
| 22 | 539 99 06-45 | 2 | Bolt 3/8-16 x 1 Round Hd | |
| 23 | 532 16 58-57 | 4 | Screw Hex Washer Hd Torx | |
| 24 | 539 91 38-47 | 1 | Nut 3/8 Palnut | |
| 25 | 521 99 11-01 | 8 | Nut 1/2-13 Hex Flange Nyloc | |
| 26 | 521 99 65-01 | 6 | Nut 3/8-16 Hex Flange Nyloc | |
| 27 | 819 13 32-10 | 1 | Washer 10 Gauge | |

Z 554, 967929801-00

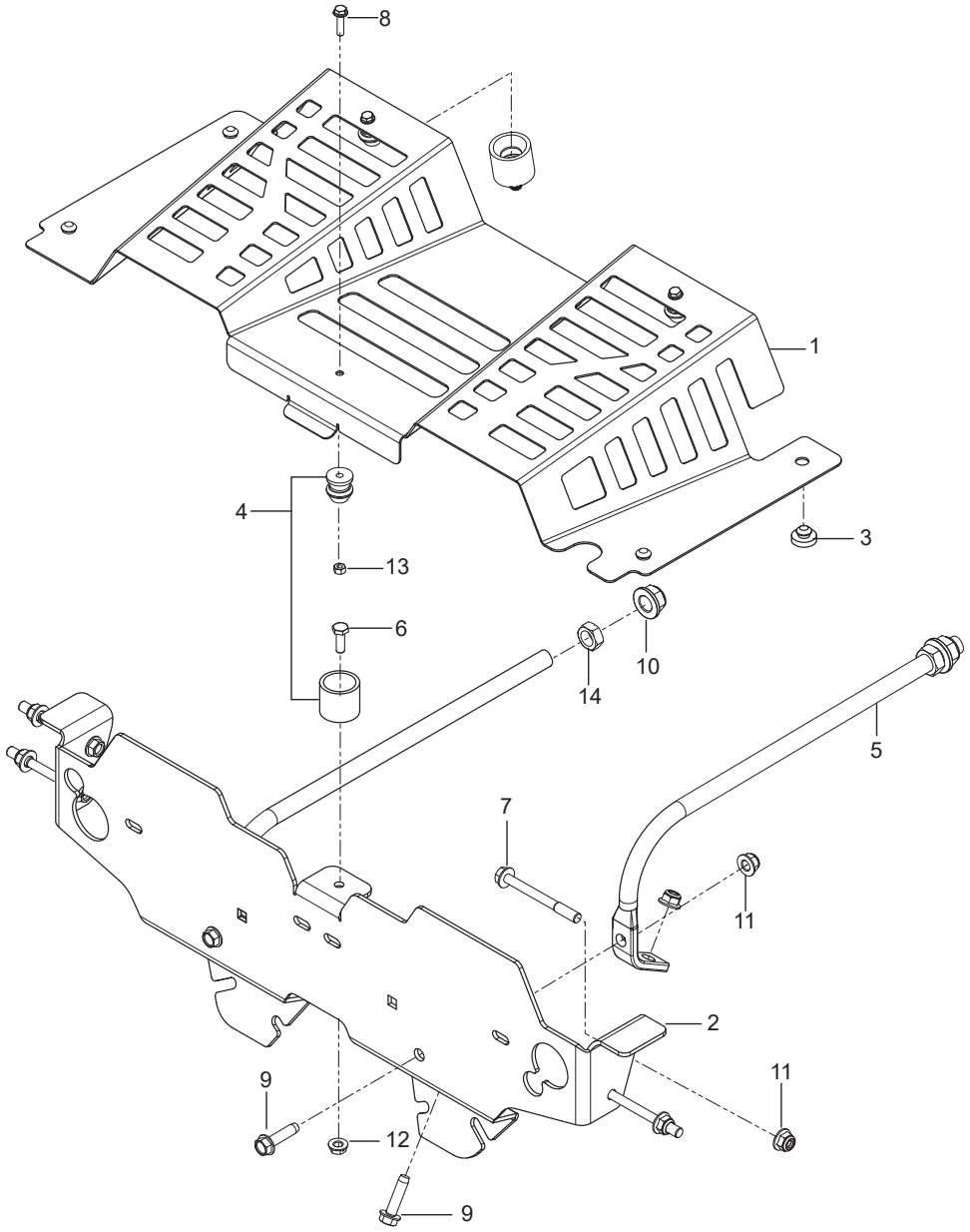


| Ref. | Part No. | Qty | Description | Kit / Assy Includes |
|---|---|---|---|---|
| 1 | 591 35 99-01 | 1 | Shield, Fan w/ Safety Decal | |
| 2 | 582 46 12-06 | 1 | Bracket Org | |
| 3 | 539 10 25-87 | 4 | Grommet, Bumper | |
| 4 | 582 46 17-01 | 3 | Assy Holder | |
| 5 | 582 46 13-03 | 2 | Rod | |
| 6 | 874 78 04-12 | 3 | Bolt 1/4-20 x 3/4 Hex Hd | |
| 7 | 874 49 05-48 | 4 | Bolt 5/16-18 x 3 Hex Flange Hd | |
| 8 | 503 20 00-01 | 3 | Screw M5 x 20/20 10 9 | |
| 9 | 587 59 21-01 | 4 | Screw 5/16-18 x 1-1/4 Thread roll | |
| 10 | 521 99 11-01 | 2 | Nut 1/2-13 Hex Flange Nyloc | |
| 11 | 539 11 28-99 | 8 | Nut 5/16-18 Hex Flange Nyloc | |
| 12 | 532 19 17-30 | 3 | Nut 1/4-20 Hex Flange Center Lock | |
| 13 | 731 23 14-05 | 3 | Nut-M5 x 8 Hex | |
| 14 | 873 35 08-00 | 2 | Nut 1/2-13 Jam Hex | |