Husqvarna®

Husqvarna®

www.husqvarna.com

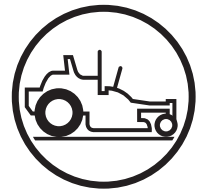

Parts Manual

Z 572x / 967930501-00

Please read the operator manual carefully and make sure you understand the instructions before using the machine.

Gasoline containing a maximum of 10% ethanol (E10) is permitted for use in this machine. The use of gasoline with more than 10% ethanol (E10) will void the product warranty.

2018-09-11 JSE

114 09 19-27



When you need spare parts or support in service questions, warranty issues, etc., please consult the following professional:

This manual belongs to the machine with the manufacturing number:	Engine	Transmission

Manufacturing Number

The machine’s manufacturing number can be found on the printed plate affixed to the engine compartment.

Stated on the plate, from the top are:

- The machine’s type designation (I.D.)
- The manufacturer’s type number (Model)
- The machine’s serial number (Serial no.)

Please have the type designation and serial number available when ordering spare parts.

©2018 All rights reserved.
Orangeburg SC. Printed in U.S.A.

CONTENTS

FRAME 4

ENGINE MOUNTING, GUARDS & MUFFLER 6

STEERING / BRAKE 8

CONSOLE 10

FUEL SYSTEM 12

HYDRAULIC PUMP - MOTOR 14

HYDRAULIC GUARDS 16

WHEELS & TIRES 18

MOWER LIFT / DECK LIFT 20

MOWER DECK / CUTTING DECK 22

SPINDLE 24

SEAT 26

DECALS 28

Illustrations may or may not represent the actual assemblies and it is not recommended to use this manual as a guide to assemble or disassemble the mower.

NOTE: All fasteners are Grade 5 unless otherwise specified.

Z 572x, 967 930501-00

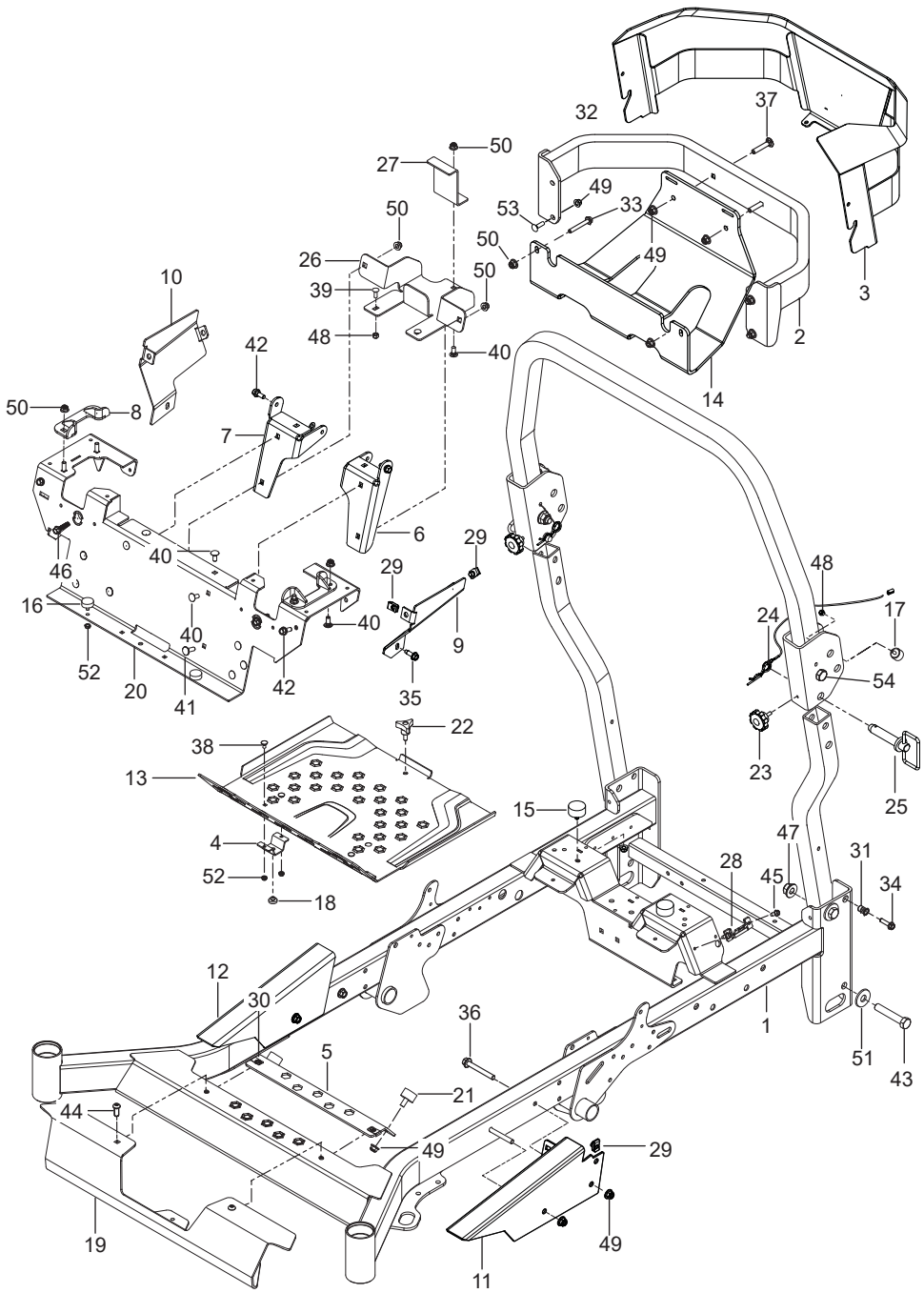

Ref.	Part No.	Qty	Description	Kit / Assy Includes
1	574 43 88-01	1	Decal, Belt Routing (72" only)	
2	590 20 94-01	1	Decal, Motion/Brake Right	
	590 20 95-01	1	Decal, Motion/Brake Left	
3	590 80 79-01	1	Decal, Z 572x	
4	581 72 43-01	2	Decal, No Step	
5	539 10 57-45	1	Decal, Battery Warning	
6	539 10 57-44	2	Decal, Danger Belt	
7	581 72 44-01	1	Decal, Deflector Warning	
9	574 45 50-01	1	Decal, Crown Large	
10	593 01 11-01	1	Decal, ROPS	
11	574 56 90-02	1	Decal, Warning ROPS	
12	574 56 94-01	1	Decal, Fuse	
13	584 90 46-01	1	Decal, Deck/Deflect Warning	
14	532 42 86-77	1	Decal, Crown Small	
15	590 79 93-01	1	Decal, Deck Height	
16	590 21 00-01	1	Decal, Commercial	
17	590 84 68-01	1	Decal, Maintenance/Service	
18	590 21 03-02	1	Decal, Control Panel Right	
19	590 21 05-01	1	Decal, Control Panel Left	
20	590 20 97-01	1	Decal, Transmission Warning	
21	590 20 92-01	1	Decal, Starting EFI	
22	577 46 90-01	2	Decal, Emblem	
	NOT SHOWN			
	577 15 01-01	1	Decal, Fuel	

Z 572x, 967 930501-00

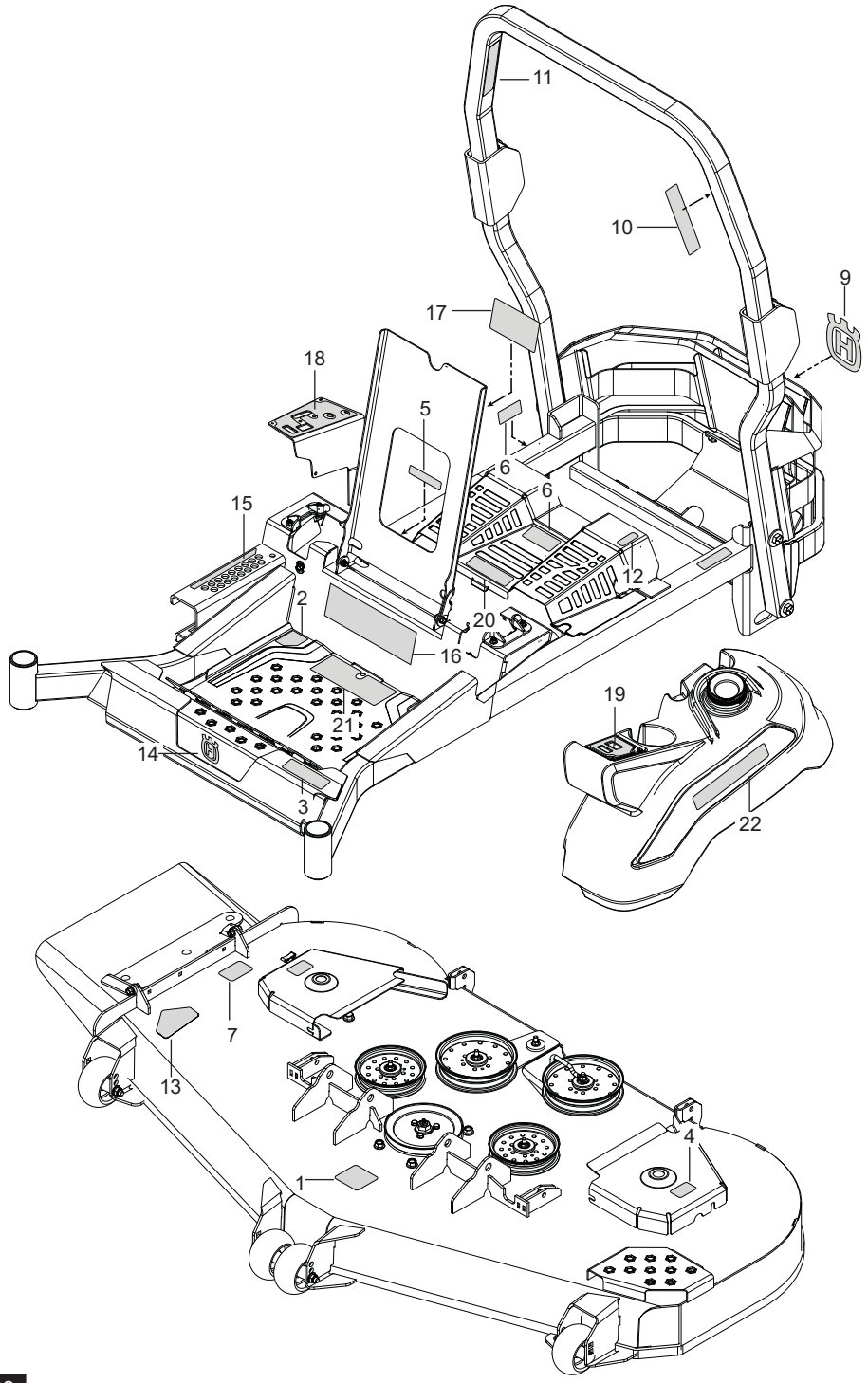

Ref.	Part No.	Qty	Description	Kit / Assy Includes
1	591 35 98-02	1	Frame w/ Safety Decal	
2	522 67 57-02	1	Guard Rear Org	
3	587 89 80-02	1	Guard Engine Grey	
4	589 80 88-02	2	Bracket, Floorpan	
5	589 80 72-02	1	Bracket, Isolator Support Blk	
6	589 44 82-02	1	Bracket, Seat Mount Left	
7	589 44 82-04	1	Bracket, Seat Mount Right	
8	582 48 11-01	2	Bracket, Stop	
9	595 32 75-02	1	Panel, Close Out Left Org	
10	595 32 75-04	1	Panel, Close Out Right Org	
11	582 48 08-03	1	Panel, Wedge Left Org	
12	582 48 08-04	1	Panel, Wedge Right Org	
13	589 30 46-02	1	Plate, Footrest Org	
14	596 69 41-02	1	Plate, Skid Gry	
15	582 47 87-01	2	Bumper 5/16-18	
16	575 81 15-01	2	Bumper 1/4-20 x 3/8" Stud	
17	522 80 14-01	2	Bumper 1/4-20 Male Stud	
18	539 10 25-87	2	Bumper, Grommet	
19	589 74 52-02	1	Cover, Front Plate Gry	
20	582 48 05-02	1	Cross Member, Front Org	
21	589 74 40-01	2	Isolator, Footrest	
22	539 10 44-11	1	Knob w/Stud	
23	591 34 45-01	2	Knob	
24	591 10 17-01	2	Pin w/ Lanyard	
25	591 10 16-01	2	Pin, Handle	
26	582 46 07-02	1	Plate, Battery	
27	582 46 06-02	1	Mount, Battery	
28	589 50 07-01	1	Mount, Fuse Box	
29	539 10 47-63	7	Retainer 5/16-18 U Type	
30	589 80 68-01	2	Retainer 3/8-18 U Type	
31	539 11 10-28	2	Nutsert 5/16-18	
33	574 23 38-01	2	Bolt 5/16-18 x 2-1/4 Hex Flange Hd	
34	525 54 40-01	2	Bolt 5/16-18 x 1-1/4 Hex Flange Hd Tap	
35	817 49 05-16	4	Screw 5/16-18 x 1 Thread Form	
36	577 11 77-01	4	Bolt 3/8-16 x 3 Hex Flange Hd	
37	539 10 01-45	2	Bolt 3/8-16 x 2 Round Hd Square Neck	
38	872 14 04-04	4	Bolt 1/4-20 x 1/2 Round Hd Square Neck	
39	539 11 56-20	2	Bolt 1/4-20 x 3/4 Round Hd Square Neck	
40	539 99 03-16	14	Bolt 5/16-18 x 3/4 Round Hd Square Neck	
41	539 99 02-08	2	Bolt 5/16-18 x 1 Round Hd Square Neck	
42	539 11 03-03	4	Bolt 5/16 Shoulder	
43	580 75 46-01	6	Bolt 5/8-11 x 3-1/2 Hex Hd	
44	589 79 72-01	2	Screw 3/8-16 x 1 Button Hd Torx	
45	817 49 04-08	2	Screw 1/4-20 x 1/2 Thread Roll	
46	585 98 61-01	2	Screw 1-1/4 Shakeproof Black	
47	525 82 91-01	6	Nut 5/8-11 Hex Flange Nyloc	
48	539 97 69-78	6	Nut 1/4-20 Hex Nyloc	
49	521 99 65-01	12	Nut 3/8-16 Hex Flange Nyloc	
50	539 11 28-99	21	Nut 5/16-18 Hex Flange Nyloc	
51	539 10 26-53	4	Washer 5/8 Std Flat	
52	539 10 81-20	2	Nut 1/4-20 Hx Thin Nyloc	
53	872 14 06-10	4	Bolt Carr. 3/8-196 x 1-1/4	
54	591 17 66-01	2	Bolt Hexang 5/8-11 x 4-1/4 Gr. 5	
	NOT SHOWN			
	590 87 78-03	1	Kit, ROPS Assy Gry	

Z 572x, 967 930501-00

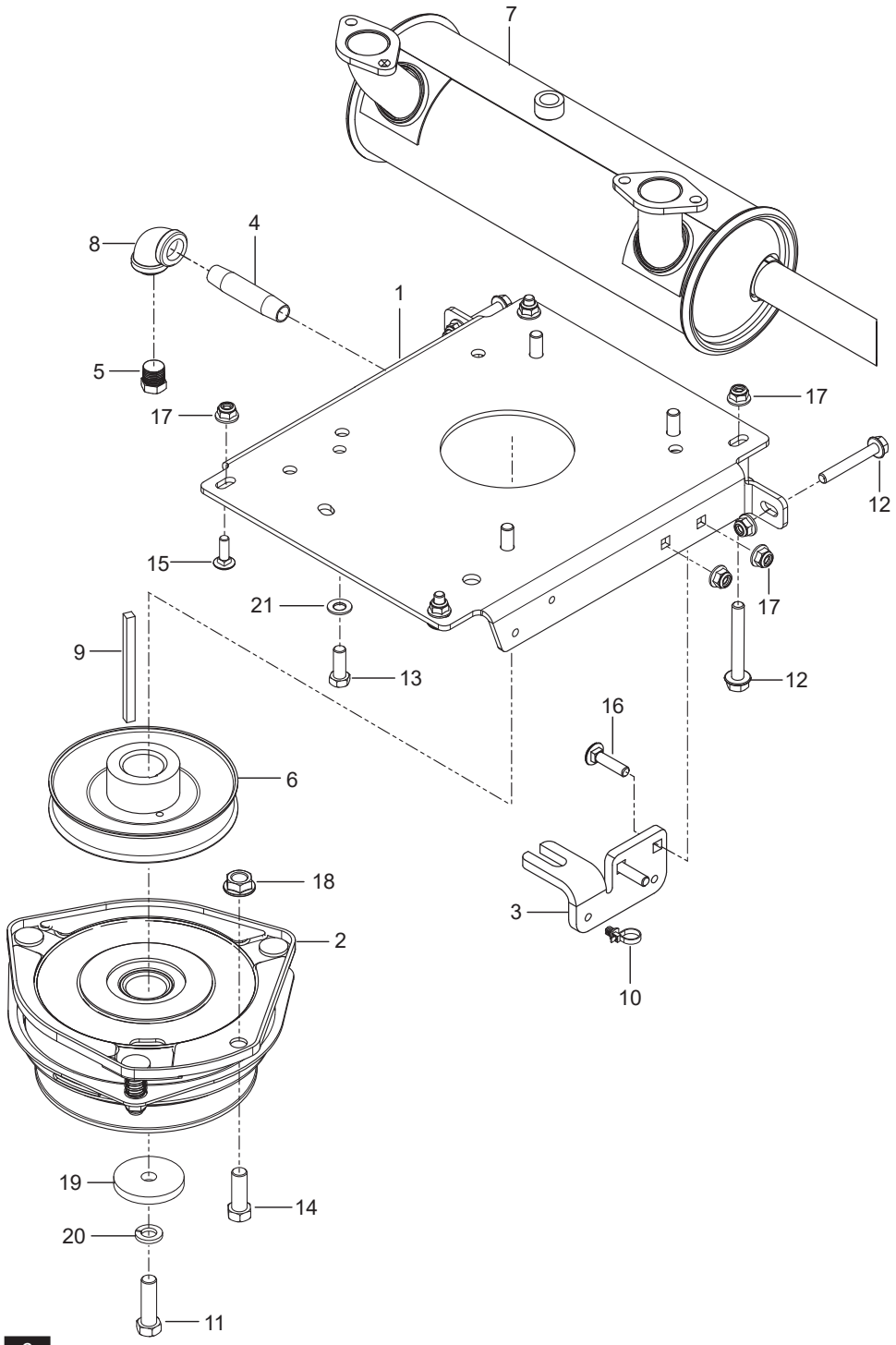

Ref.	Part No.	Qty	Description	Kit / Assy Includes
1	582 46 01-02	1	Seat, Suspension	12
2	582 47 88-01	1	Bar, Latch Seat	
3	582 47 82-01	2	Bracket, Latch	
4	590 55 50-02	1	Bracket, Seat Rod	
5	590 48 18-01	8	Isolator	
6	539 11 63-77	4	Insert, Iso-Mount	
7	590 37 35-01	1	Latch, Rotary	
8	590 50 68-02	1	Plate, Seat Mount	
9	590 50 72-01	1	Rod, Seat	
10	539 11 39-52	2	Spring	
11	582 47 81-01	4	Coupler 5/16-18 x 1-1/8 Hex	
12	532 19 27-49	1	Switch, Seat	
13	539 10 83-92	4	Bolt 5/16-18 x 5/8 Hex Hd	
14	582 47 89-01	2	Bolt 5/16-18 Threaded x 2-1/2 Shoulder	
15	582 47 85-01	2	Bolt 1/4-20 x 1-1/2 Hex Flange Hd Grade 8	
16	539 99 03-16	8	Bolt 5/16-18 x 3/4 Round Hd	
17	582 47 86-01	2	Nut 1/4-20 Flange Nyloc Grade 8	
18	539 91 38-47	1	Nut 3/8 Retaining Blk	
19	539 11 28-99	6	Nut 5/16-18 Hex Flange Nyloc	
20	522 02 34-01	2	Washer 3/8 Thick	
21	532 41 35-24	8	Washer 13/32 x 1 x 1/2	
22	539 99 01-18	2	Washer 3/8 Slotted Lock	
23	539 99 01-87	4	Washer 5/16 Slotted Lock	

Z 572x, 967 930501-00

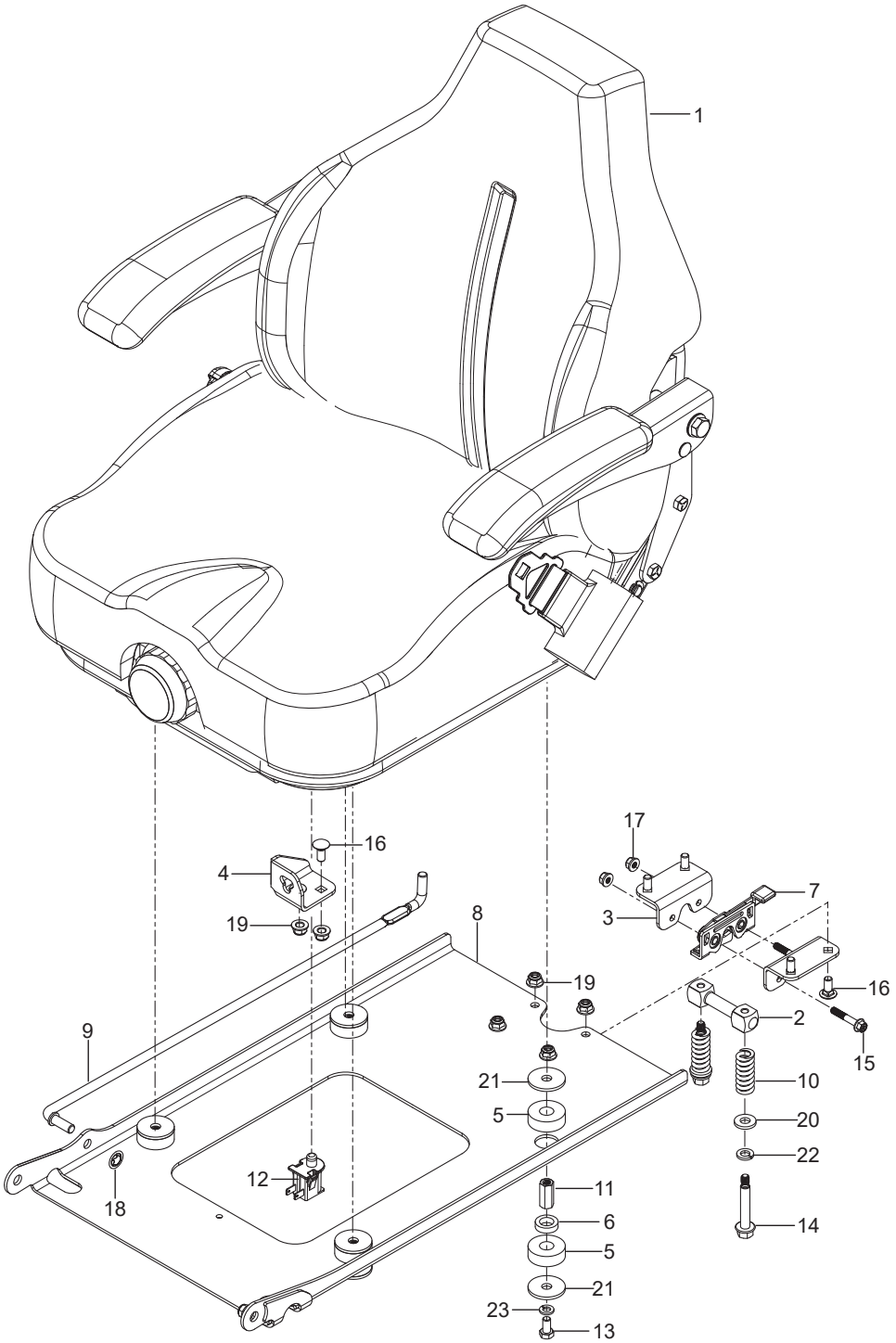

Ref.	Part No.	Qty	Description	Kit / Assy Includes
1	582 73 33-02	1	Plate, Engine	
2	525 74 95-01	1	Clutch	
3	522 67 67-02	1	Stop, Clutch	
4	539 11 89-11	1	Pipe 3/8 x 3"	
5	522 83 70-01	1	Plug, Drain, 3/8"	
6	510 01 98-01	1	Pulley, Engine	
7	596 69 20-01	1	Muffler	
8	539 10 50-72	1	Elbow 3/8" Npt	
9	525 74 99-01	1	Key 1/4 x 3-1/2	
10	505 28 00-01	1	Tie Wrap w/Clip	
11	581 33 28-01	1	Bolt 7/16-20 x 1-1/2 Hex Hd Clutch	
12	574 23 38-01	4	Bolt 5/16-18 x 2-1/4 Hex Flange Hd	
13	539 99 05-63	4	Bolt 3/8-16 x 1 Hex Hd	
14	874 78 07-16	1	Bolt 7/16-14 x 1-1/4 Hex Hd	
15	539 99 02-08	4	Bolt 5/16-18 x1 Round Hd Square Neck	
16	539 10 29 33	2	Bolt 5/16-18 x1-1/2 Round Hd Square Neck	
17	539 11 28-99	8	Nut 5/16-18 Hex Flange Nyloc	
18	539 10 25-82	1	Nut 7/16-14 Hex Whiz Lock	
19	539 12 56-26	1	Washer	
20	539 99 02-47	1	Washer 7/16 Slotted Lock Std	
21	539 10 25-93	4	Washer 3/8 Spring	
	NOT SHOWN			
	596 20 97-01	1	Engine, Yamaha MX825V (33HP) For Engine Replacement Parts, See a Yamaha Dealer	

Z 572x, 967 930501-00

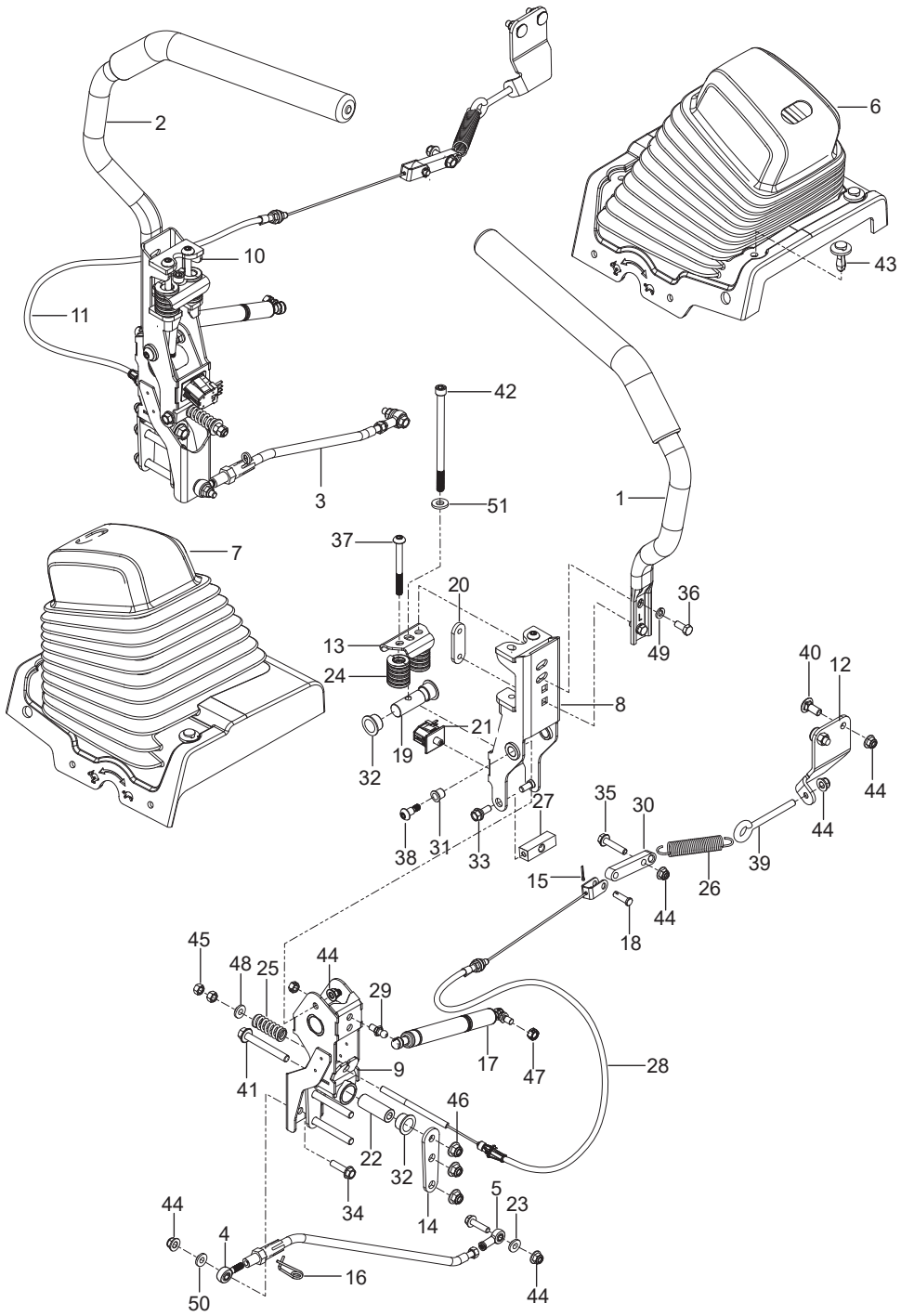

Ref.	Part No.	Qty	Description	Kit / Assy Includes
1	580 94 22-01	3	Hub	
2	580 94 21-01	3	Shaft, Spindle	
3	580 94 27-01	3	Seal, V Ring	
4	580 94 26-01	6	Seal, Shaft	
5	583 91 11-01	3	Kit, Bearing w/ Shims	3, 4
6	580 94 23-01	3	Spacer	
7	580 94 25-01	3	Carrier, Seal	
8	539 97 69-98	3	Zerk	
9	539 97 73-26	3	Valve, Grease Poppet	
10	539 13 06-53	3	Nut 3/4-16 Hex Flange	
11	580 94 33-06	3	Assembly, Spindle Cast Iron	
	NOT SHOWN			
	574 75 42-01	1	Kit, Bearing Tool When replacing the spindle bearings, also order the Bearing Tool Kit to assure proper installation	

Z 572x, 967 930501-00

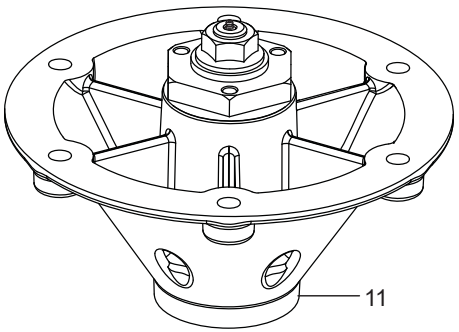

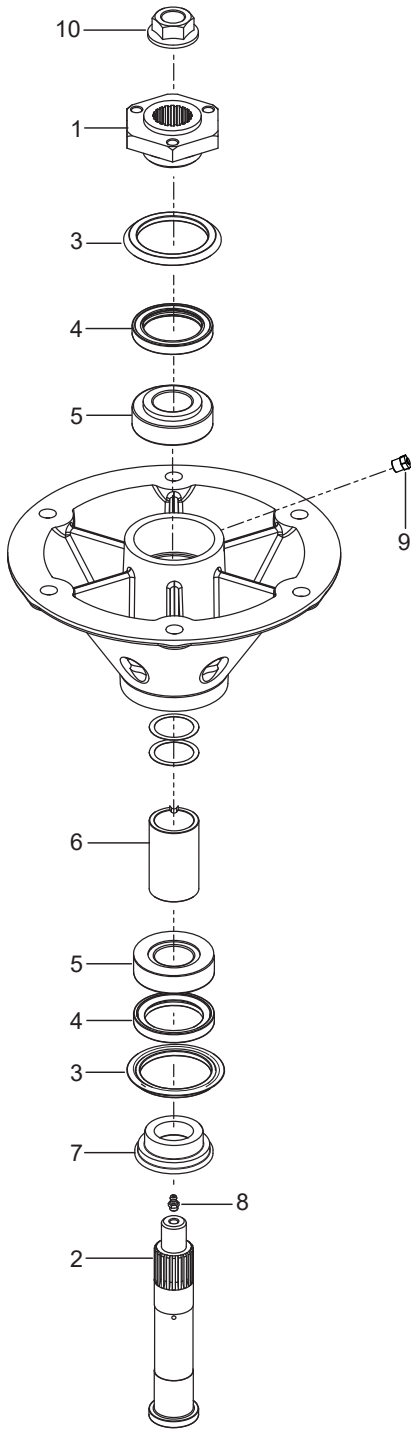

Ref.	Part No.	Qty	Description	Kit / Assy Includes
1	582 47 55-01	1	Lever w/ Grip Left	
2	582 47 55-02	1	Lever w/ Grip Right	
3	501 56 70-01	1	Assembly, Rod Control Left	4, 5, 16, 23
	501 56 71-01	1	Assembly, Rod Control Right	4, 5, 16, 23
4	588 69 25-02	2	End, Rod Male	
5	579 76 46-01	2	End, Rod Female	
6	582 48 40-01	1	Bellow, Control Left	41
7	582 48 41-01	1	Bellow, Control Right	41
8	592 65 38-01	1	Carrier, Upper w/ Bearings Left	31
	592 65 38-02	1	Carrier, Upper w/ Bearings Right	31
9	592 65 39-01	2	Carrier, Lower w/ Bearings	
10	592 72 40-01	1	Assembly, Carrier Left w/ Park Brake	Without 3, 17
	592 72 40-02	1	Assembly, Carrier Right w/ Park Brake	Without 3, 17
11	592 65 35-01	1	Assembly, Park Brake	15, 16, 25, 28, 45, 48
12	582 47 78-02	1	Bracket Left	
	582 47 78-04	1	Bracket Right	
13	582 47 69-01	2	Bracket, Spring	
14	582 47 51-02	4	Bracket, Control	
15	532 16 94-84	2	Clip	
16	582 55 19-01	2	Clip, Control	
17	588 77 54-01	2	Damper	
18	582 47 74-01	2	Pin, Clevis	
19	589 50 51-01	2	Pivot	
20	589 48 96-01	2	Retainer	
21	589 50 09-01	2	Switch, Brake NC	
22	582 47 50-01	2	Spacer, Pivot	
23	582 71 13-03	2	Spacer, Step Up	
24	582 47 70-01	4	Spring 1-1/4 x 5	
25	532 15 13-32	2	Spring, Brake	
26	582 47 77-01	2	Spring	
27	582 47 72-01	2	Yoke, Brake Cable	
28	582 47 75-01	2	Cable, Brake	
29	539 11 06-07	4	Stud 10mm Ball	
30	582 47 76-01	2	Extension	
31	582 47 68-01	4	Bearing 1/2 Flange	
32	539 13 15-18	8	Bearing, Flange	
33	539 11 03-03	4	Bolt 5/16 Shoulder	
34	525 54 40-01	4	Bolt 5/16-18 x 1-1/4 Hex Flange Hd	
35	525 46 54-01	2	Bolt 5/16-18 x 1-1/2 Hex Flange Hd	
36	539 97 69-34	4	Bolt 5/16-18 x 3/4 Hex Hd	
37	582 47 71-01	4	Bolt 5/16-18 x 3-1/2 Torx	
38	582 47 64-01	2	Bolt 3/8 x 1/2 5/16-18 Shoulder	
39	539 11 55-74	2	Bolt 5/16 x 3-1/2 Eye	
40	539 99 02-08	4	Bolt 5/15-18 x 1 Round Hd	
41	577 11 77-01	6	Bolt 3/8-16 x 3 Hex Flange Hd	
42	589 50 56-01	2	Bolt 3/8-16 x 6	
43	582 48 29-01	12	Rivet Pin	
44	539 11 28-99	14	Nut 5/16-18 Hex Flange Nyloc	
45	539 99 02-23	4	Nut 5/16-24 Hex	
46	521 99 65-01	6	Nut 3/8-16 Hex Flange Nyloc	
47	539 99 01-84	4	Nut 5/16-18 Hex Center Lock	
48	819 12 14-14	2	Washer 5/16 Flat	
49	539 99 01-87	4	Washer 5/16 Slotted Lock	
50	819 11 11-16	2	Washer 11/32 16 Gauge	
51	522 02 34-01	2	Washer 3/8 Thick	

Z 572x, 967 930501-00

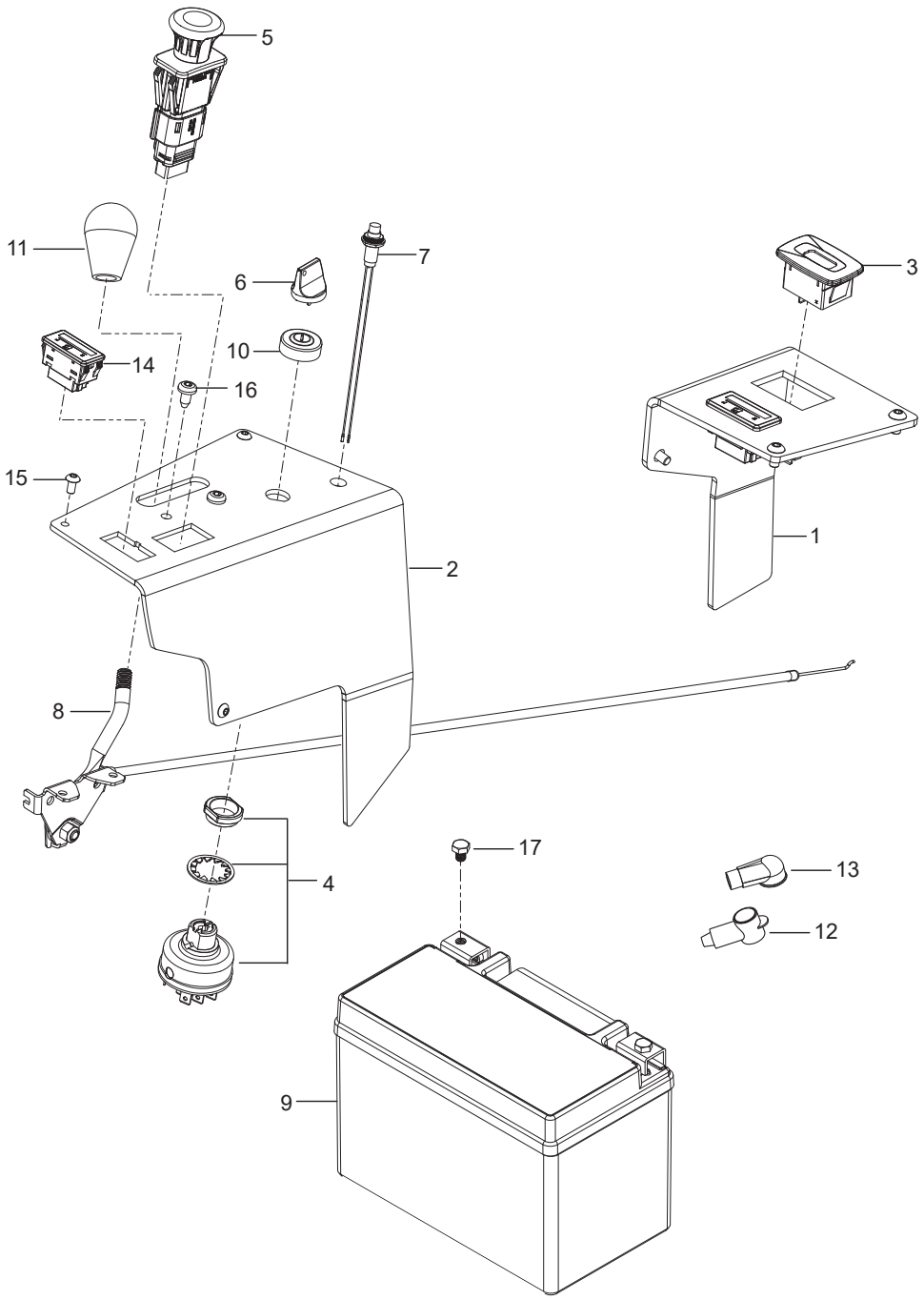

Ref.	Part No.	Qty	Description	Kit / Assy Includes
1	591 35 97-06	1	Deck w/ Safety Decals	
2	588 26 48-04	1	Belt, Deck	
3	539 10 54-76	3	Blade 25"	
4	510 01 96-01	2	Pulley, Idler 6"	
5	539 13 06-47	3	Pulley, Deck	
6	510 01 51-01	2	Pulley, Idler 7"	
7	582 46 30-03	1	Shield, Belt (Right, 72" Only)	
8	582 46 30-04	1	Shield, Belt (Left, 72" Only)	
9	582 46 88-01	1	Shield, Deflector	
10	510 25 45-01	4	Shield, Dust	
11	574 16 96-01	6	Roller, Gauge	
12	574 19 64-01	4	Tube, Roller 3-3/8"	
13	574 19 65-01	1	Tube, Roller 6-3/4"	
14	539 13 15-18	2	Bearing, Flange	
15	510 26 37-01	3	Bearing, Idler	
16	582 46 73-02	1	Bracket, Deflector Org	
17	582 46 32-07	1	Bracket, Pulley Cover (Right, 72" Only)	
18	582 46 32-08	1	Bracket, Pulley Cover (Left, 72" Only)	
19	594 91 33-02	1	Guard, Belt	
20	582 47 02-01	1	Keeper, Belt	
21	539 10 44-11	2	Knob w/ Stud	
22	590 52 37-02	1	Plate, Backing Discharge Blk	
23	582 46 64-01	1	Plate, Spring Retainer	
24	582 46 81-01	1	Shaft Mount Arm Idler	
25	582 46 83-01	1	Spacer	
26	589 45 52-01	1	Spacer, Pulley	
27	582 46 80-01	1	Spring, Deck Idler	
28	574 22 18-02	2	Baffle, Blk	
29	582 46 27-02	1	Arm, Idler	
30	539 10 47-63	2	Retainer-U Type 5/16-18	
31	872 14 06-10	3	Bolt 3/8-16 x 1-1/4 Round Hd Square Neck	
32	510 02 23-01	4	Bolt 1/2-13 x 4-75 Round Hd Square Neck	
33	872 14 06-28	1	Bolt 3/8-16 x 3-1/2 Round Hd Square Neck	
34	872 14 08-64	1	Bolt 1/2-13 x 8 Round Hd Square Neck	
35	539 11 56-20	8	Bolt 1/4-20 x 3/4 Round Hd Square Neck	
36	574 21 06-01	18	Bolt 1/2-13 x 1 Hex Flange Hd	
37	525 61 28-01	2	Bolt 3/8-16 x 1 Hex Flange Hd	
38	521 99 66-01	1	Bolt 3/8-16 x 4 Hex Flange Hd	
39	582 47 64-01	4	Bolt 3/8 x 1/2 5/16-18 Shoulder	
40	539 13 03-15	9	Bolt 5/16-18 x 1/2 Hex Hd	
41	874 49 06-44	3	Bolt 3/8-16 x 2-3/4 Hex Flange Hd	
42	574 20 20-01	1	Eye Bolt 3/8 x 4	
43	539 11 90-07	3	Bolt/Washer, Blade	
44	521 99 65-01	11	Nut 3/8-16 Hex Flange Nyloc	
45	539 11 28-99	4	Nut 5/16-18 Hex Flange Nyloc	
46	521 99 11-01	5	Nut, 1/2-13 Hex Flange Nyloc	
47	539 10 93-32	1	Nut 3/8-16 Hex Jam	
48	539 97 69-78	8	Nut 1/4-20 Hex Nyloc	
49	539 91 38-47	1	Nut 3/8 Retaining Blk	
50	539 10 96-00	9	Washer 5/16 Disc Spring	
51	539 10 65-04	4	Washer, Hardened	

Z 572x, 967 930501-00

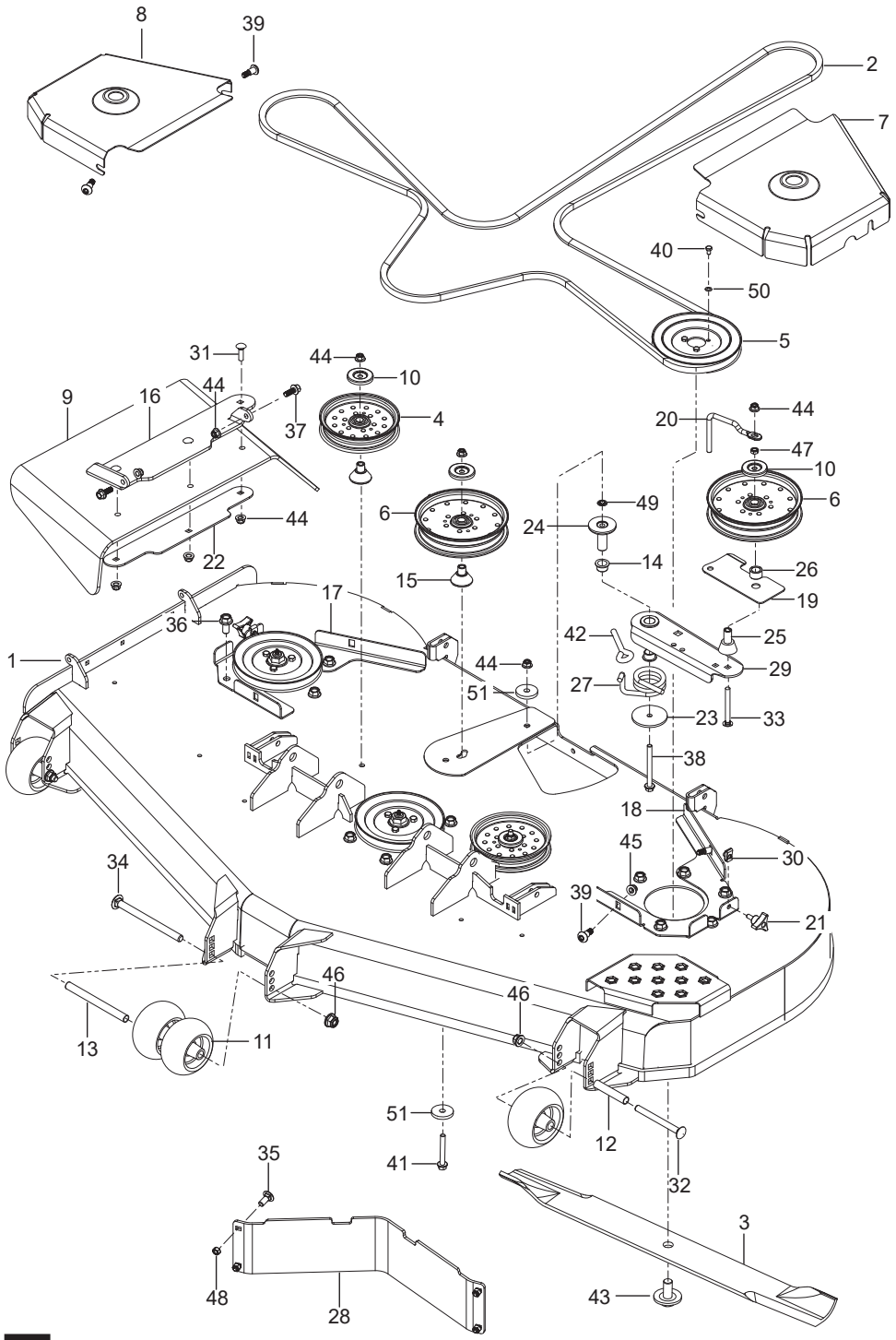

Ref.	Part No.	Qty	Description	Kit / Assy Includes
1	582 48 39-02	1	Panel, Control Left Gry	
2	582 48 36-02	1	Panel, Control Right Gry	
3	586 16 18-01	1	Meter, Service	
4	574 45 54-01	1	Switch, Ignition	
5	589 88 72-01	1	Switch, Blade	
6	574 45 55-01	1	Key, Ignition	
7	581 87 83-01	1	Light, Service	
8	582 12 03-01	1	Control, Throttle 46"	
9	589 81 95-01	1	Battery, 12V	
10	539 10 31-78	1	Cap, Switch	
11	539 13 26-24	1	Knob	
12	539 10 27-59	1	Insulator	
13	582 03 12-01	1	Boot	
14	592 87 27-01	2	Gauge, Fuel	
15	539 11 43-41	6	Screw #10-24 x 3/8 Socket Head	
16	532 19 98-55	2	Screw 1/4-20 Panhead	
17	582 46 08-01	2	Screw M6 x 8MM Hex	
	NOT SHOWN			
	593 77 78-03	1	Harness, Main (EFI)	
	574 51 40-01	1	Timer, Seat	
	590 63 21-01	1	Cables, Battery Red/Blk	

Z 572x, 967 930501-00

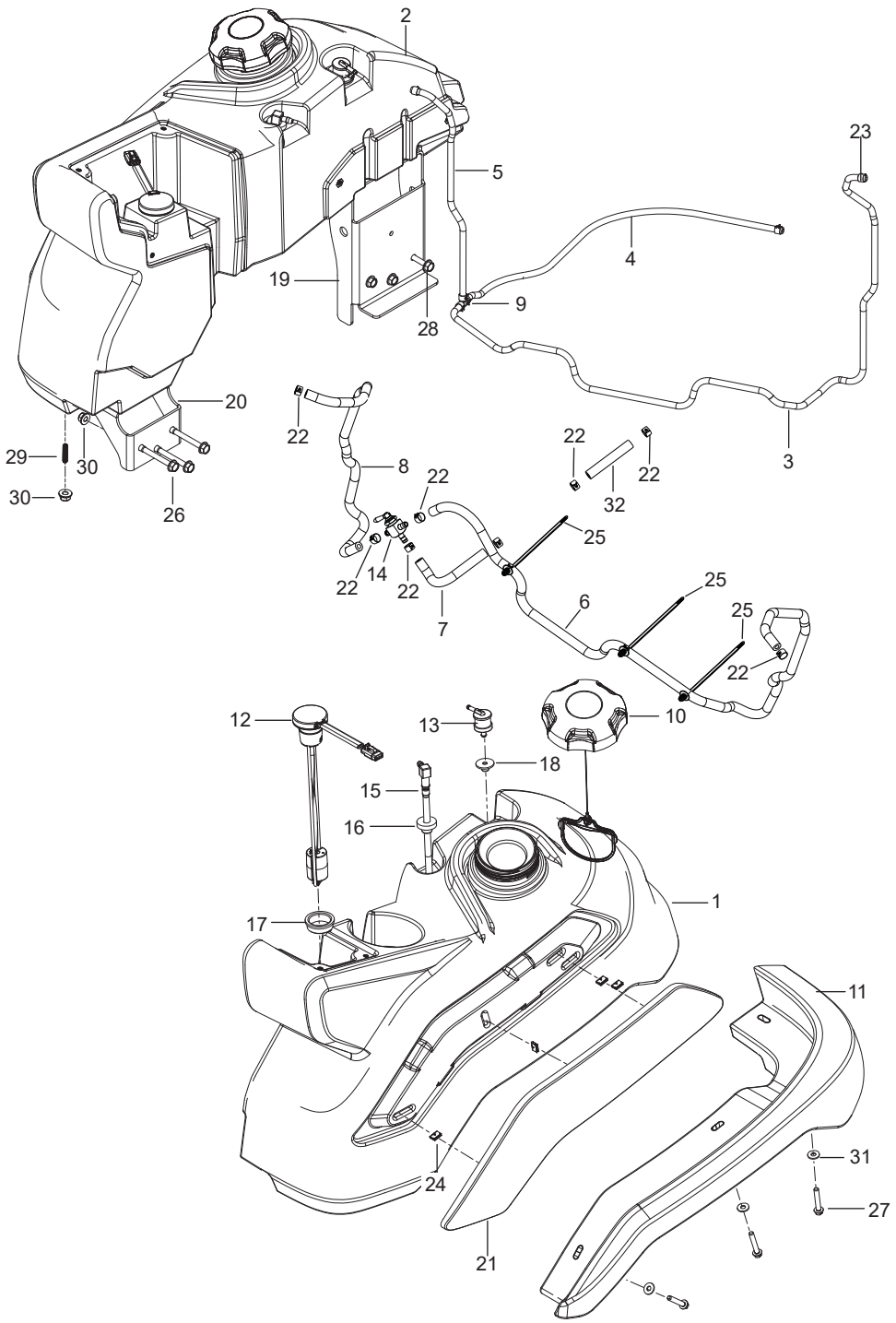

Ref.	Part No.	Qty	Description	Kit / Assy Includes
3	582 46 54-02	2	Arm, Deck Lift Inner Blk	
4	582 46 39-02	2	Arm, Deck Lift Outer Blk	
5	582 46 20-01	1	Arm, Drawbar Left	
6	582 46 20-02	1	Arm, Drawbar Right	
7	582 46 46-01	2	Rod Connecting	
8	582 47 28-01	1	Rod Height Gauge	
9	582 47 14-01	1	Rod Release Connecting Toe	
10	510 40 83-01	1	Pedal, Deck Height	
11	510 08 95-01	1	Pedal, Deck Release	
12	510 02 39-02	4	Block, Pillow	
13	582 46 72-01	1	Block, Rod End	
14	582 46 69-02	1	Bracket, Height Org	
15	582 46 89-02	2	Bracket, Pillow Block Black	
16	593 09 19-02	1	Bracket, Spring HD	
17	592 65 41-01	1	Lever, Lock w/ Bearing	
18	539 10 96-93	2	Chain 3" 3 Link Lift	
19	539 10 26-41	2	Chain 5" 3 Link Lift	
20	582 46 48-01	2	Pivot 3" Connecting Rod	
21	582 76 39-02	1	Plate, Height Gauge	
22	589 45 32-01	1	Assy, Release Pedal	11, 31
23	582 46 90-01	2	Shackle, Chain	
24	582 46 42-01	2	Trunnion	
25	593 09 18-01	2	Spring, Lift HD	
26	582 47 13-01	1	Spring, Torsion	
27	582 46 70-01	1	Swivel, Height Bar	
28	582 46 71-01	1	Swivel, Top Release	
29	582 46 99-01	2	Bushing 1-3/8 Deck Inner	
30	582 46 98-01	2	Bushing 1-1/2 Deck Outer	
31	510 08 92-01	5	Bushing 3/4 x 1 Sleeve	
32	539 91 27-30	1	E-Ring 1/2	
33	539 99 08-70	2	E-Ring 3/8	
34	590 46 55-01	1	Pin 3-1/2 Height Adjust	
35	539 10 28-89	2	Pin 1/8 x 2 Cotter	
36	582 46 67-01	4	Bolt 3/4-10 x 7-1/2 Socket Hd	
37	582 47 26-01	2	Bolt 3/8-16 x 1 Button Hd	
38	574 20 20-01	2	Bolt 3/8 x 4 Eye	
39	539 99 05-80	1	Bolt 1/4-20 x 3/4 Hex Hd	
40	589 78 60-01	4	Bolt 3/8-16 x 3-3/4 Grade 8	
41	501 06 41-02	3	Bolt 5/16-18 x 1 Shoulder	
42	501 06 41-01	4	Bolt 5/16-18 x 7/8 Shoulder	
43	510 40 82-01	1	Bolt 1/2-13 x 2-1/2 Shoulder	
44	539 10 11-75	4	Bolt 7/16-14 x 1-1/2 Hex Hd	
45	582 46 56-01	2	Bolt 7/16-14 x 4-1/2 Square Hd Gr 8	
46	589 67 77-01	3	Nut 5/8-11 Hex Thin Nyloc	
47	539 97 69-78	1	Nut 1/4-20 Hex	
48	539 99 05-46	2	Nut 3/8-16 Hex Center Lock	
49	539 11 91-24	4	Nut 7/16-14 Hex Nyloc	
50	539 11 03-40	3	Nut 5/8-11 Nyloc	
51	521 99 65-01	6	Nut 3/8-16 Hex Flange Nyloc	
52	539 11 28-99	2	Nut 5/16-18 Hex Flange Nyloc	
53	539 13 20-19	4	Nut 7/16-14 Hex Whiz Lock	
54	582 46 66-01	4	Nut 3/4-10 Hex Flange Nyloc	
55	539 10 87-32	2	Nut 3/8-24 Hex Jam Unf	
56	819 21 16-16	2	Washer 21/32 x 1 x 16 Ga	
57	582 46 43-01	4	Nut Flange Nyloc 7/16-14	

Z 572x, 967 930501-00

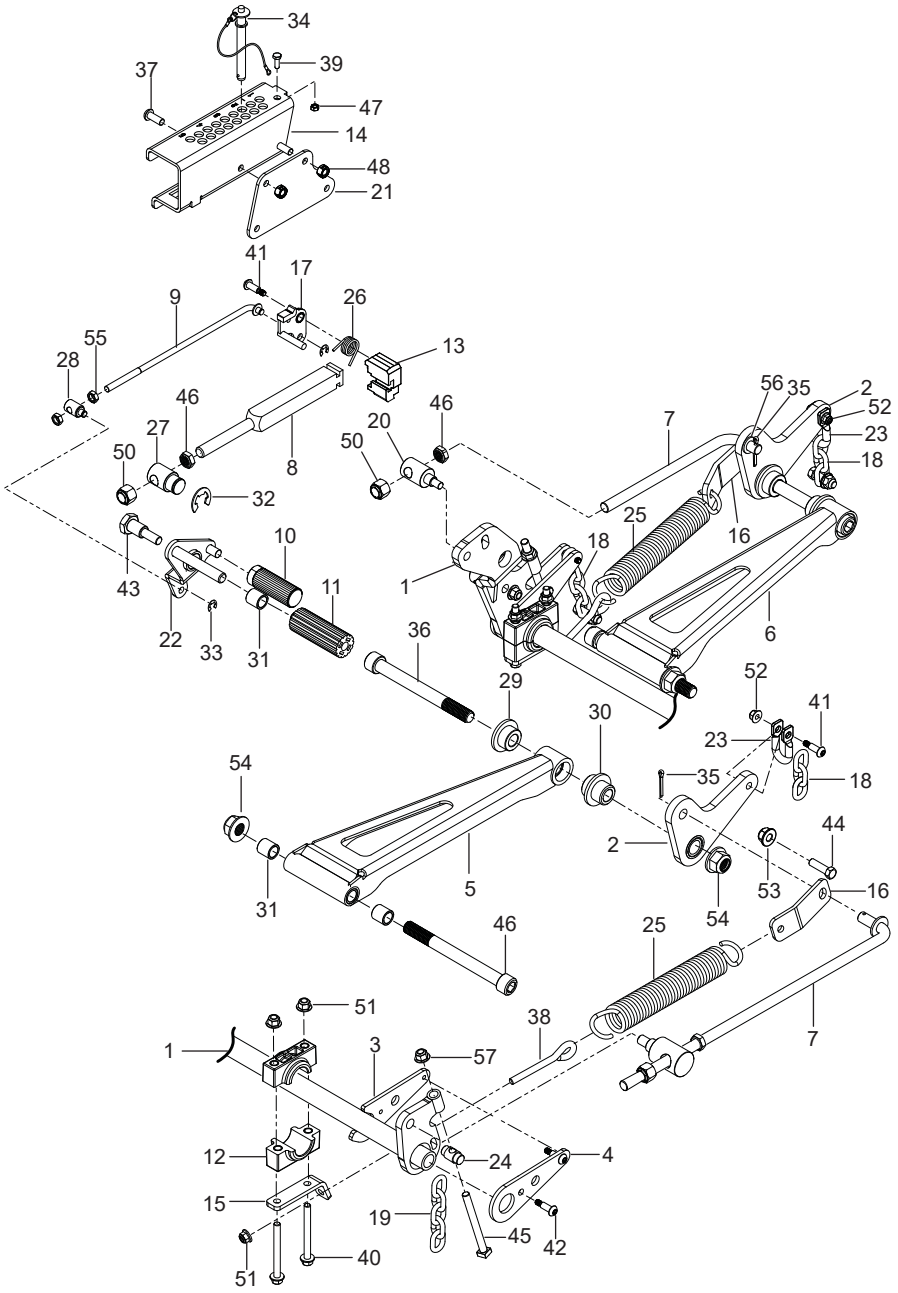

Ref.	Part No.	Qty	Description	Kit / Assy Includes
1	582 46 26-02	1	Shaft, Front Deck Lift	
2	592 65 40-02	1	Arm, Bell Crank Rear w/ Bearing RT	
	592 65 40-01	1	Arm, Bell Crank Rear w/ Bearing LT	

Ref.	Part No.	Qty	Description	Kit / Assy Includes
1	590 68 05-05	1	Assy, Tank Left	10, 12, 13, 15, 16, 17, 18
2	590 68 04-05	1	Assy, Tank Right	10, 12, 13, 15, 16, 17, 18
3	587 04 45-41	1	Hose 3/16 x 41" Vapor	
4	587 04 45-11	1	Hose 3/16 x 11" Vapor	
5	587 04 45-17	1	Hose 3/16 x 17" Vapor	
6	587 04 48-41	1	Hose 1/4 x 41" Fuel	
7	587 04 48-05	1	Hose 1/4 x 5" Fuel	
8	587 04 48-24	1	Hose 1/4 x 24" Fuel	
9	574 20 66-02	1	Tee 3/16 Fuel Line	
10	575 01 81-01	2	Cap, Fuel	
11	582 48 33-01	1	Guard, Mud Left	
	582 48 23-01	1	Guard, Mud Right	
12	590 63 88-01	2	Sensor, Fuel Level	
13	576 61 81-01	2	Valve, Roll Over	
14	539 10 26-79	1	Valve, Fuel	
15	525 86 54-02	1	Assy, Fuel Tube Left	
	525 86 54-03	1	Assy, Fuel Tube Right	
16	532 00 36-45	2	Grommet, Fuel	
17	590 20 91-01	2	Grommet, Fuel Sensor	
18	584 64 82-01	2	Grommet, Valve	
19	582 48 15-02	2	Bracket, Tank Rear	
20	582 48 16-02	2	Support, Fuel Tank Front	
21	582 48 34-01	1	Cover, Fuel Tank Left	
	582 48 24-01	1	Cover, Fuel Tank Right	
22	539 91 22-22	8	Clamp, Hose	
23	575 43 65-01	6	Clamp, Hose	
24	582 48 26-01	8	Clip	
25	591 36 71-01	3	Tie Cable	
26	874 49 05-48	6	Bolt 5/16-18 x 3 Hex Flange Head	
27	590 25 73-01	6	Screw 1/4-20 x 1-1/2 Hex Head	
28	817 49 05-16	6	Screw 5/16-18 x1 Hex Washer	
29	582 48 42-01	8	Screw 5/16-18 x 1-1/4 Set	
30	539 11 28-99	20	Nut 5/16-18 Hex Flange Nyloc	
31	532 12 66-84	6	Washer, Shim	
32	587 04 48-03	1	Hose 1/4 Fuel 3"	

Z 572x, 967 930501-00

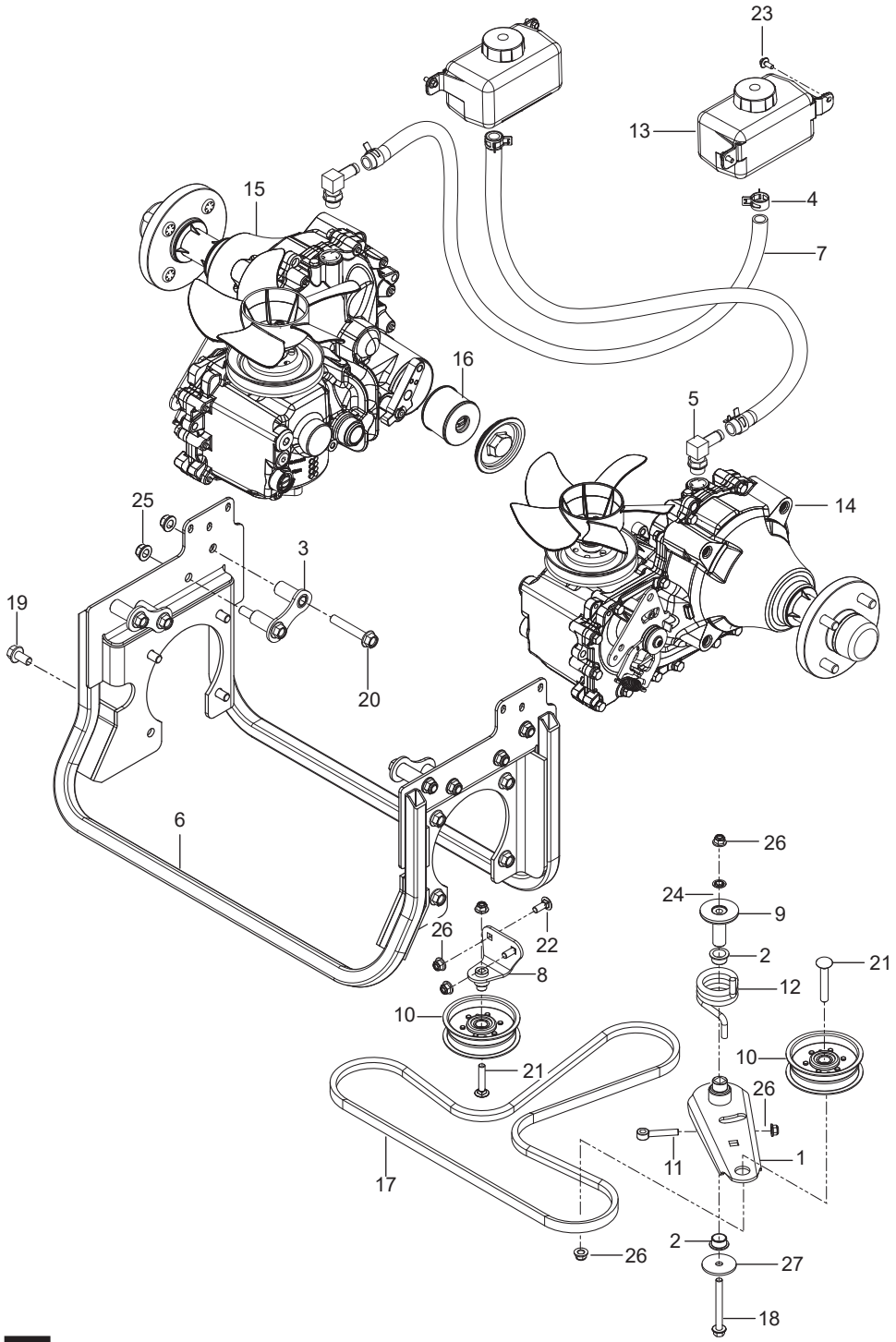

Ref.	Part No.	Qty	Description	Kit / Assy Includes
1	510 15 46-01	2	Assembly, Tire 13 x 6.5 Flat Free	
2	539 10 54-86	2	Assembly, Tire 24 x 12-12	
3	525 61 19-02	2	Yoke, Caster, Org	
4	510 03 40-01	2	Cap, Dust	
5	510 03 43-01	2	Seal, Bearing	
6	510 03 44-03	4	Cone	
7	539 10 14-74	2	Zerk	
8	590 69 07-01	4	Spacer, Axle	
9	590 70 49-01	2	Spacer, Hub	
10	539 10 55-17	2	Bolt 1/2-13 x 9-1/2 Hex Nyloc	
11	522 84 26-01	2	Nut 3/4-16 Hex Thin Nyloc	
12	587 65 39-02	8	Nut 1/2-20 Lug Grade 8	
13	521 99 11-01	2	Nut 1/2-13 Hex Flg Nyloc	
14	539 99 02-50	2	Washer 1/2 SAE	
15	574 82 47-01	2	Washer 3/4 Hardened	

Z 572x, 967 930501-00

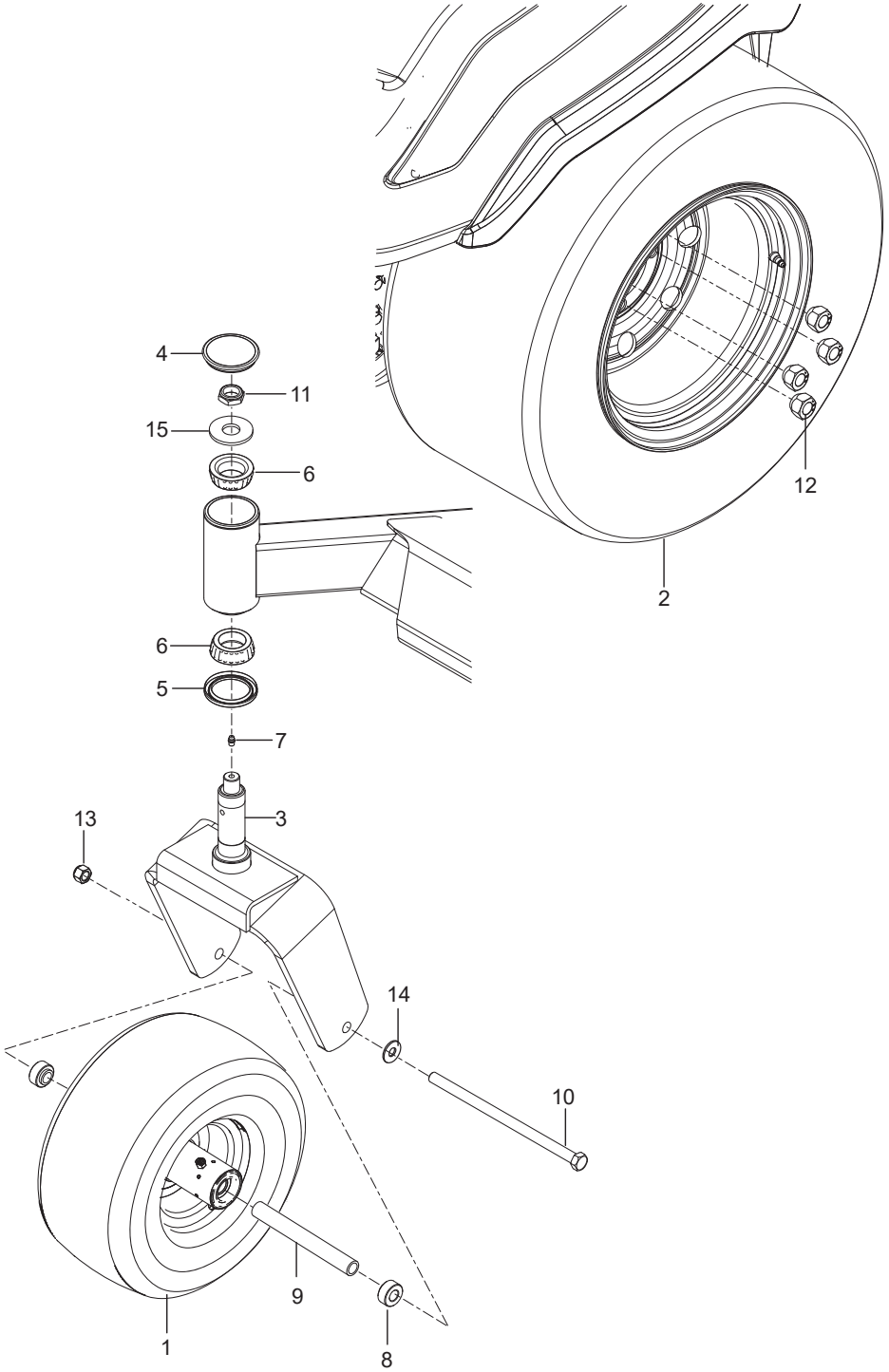

Ref.	Part No.	Qty	Description	Kit / Assy Includes
1	582 46 31-02	1	Arm, Idler	
2	501 60 37-01	2	Bearing, Flanged	
3	582 47 91-02	4	Bracket	
4	582 48 01-01	4	Clamp 15/16"	
5	529 31 14-01	2	Fitting	
6	582 47 94-04	1	Frame	
7	582 48 02-04	2	Hose 5/8" x 27"	
8	586 93 38-02	1	Mount, Idler	
9	582 46 81-01	1	Mount, Idler Arm	
10	587 65 41-01	2	Pulley, Idler	
11	582 71 62-01	1	Rod End 3/8-16 x 3	
12	582 46 84-01	1	Spring, Torsion	
13	574 49 92-01	2	Tank, Expansion	
14	582 48 00-01	1	Transmission ZT-5400 Left	
15	582 48 00-02	1	Transmission ZT-5400 Right	
16	576 12 72-01	1	Filter w/ O-Ring	
17	582 48 04-02	1	V-Belt	
18	874 49 06-52	1	Bolt 3/8-16 x 3-1/2 Hex Flange Hd	
19	574 21 06-01	8	Bolt 1/2-13 x 1 Hex Flange Hd	
20	874 49 08-48	8	Bolt 1/2-13 x 3 Hex Flange Hd	
21	539 10 01-45	2	Bolt 3/8-16 x 2 Round Hd Square Neck	
22	539 99 06-45	2	Bolt 3/8-16 x 1 R Round Hd Square Neck	
23	532 16 58-57	4	Screw Hex Washer Hd Torx	
24	539 91 38-47	1	Nut 3/8 Retaining Blk	
25	521 99 11-01	8	Nut 1/2-13 Hex Flange Nyloc	
26	521 99 65-01	6	Nut 3/8-16 Hex Flange Nyloc	
27	819 13 32-10	1	Washer 10 Gauge	

Z 572x, 967 930501-00

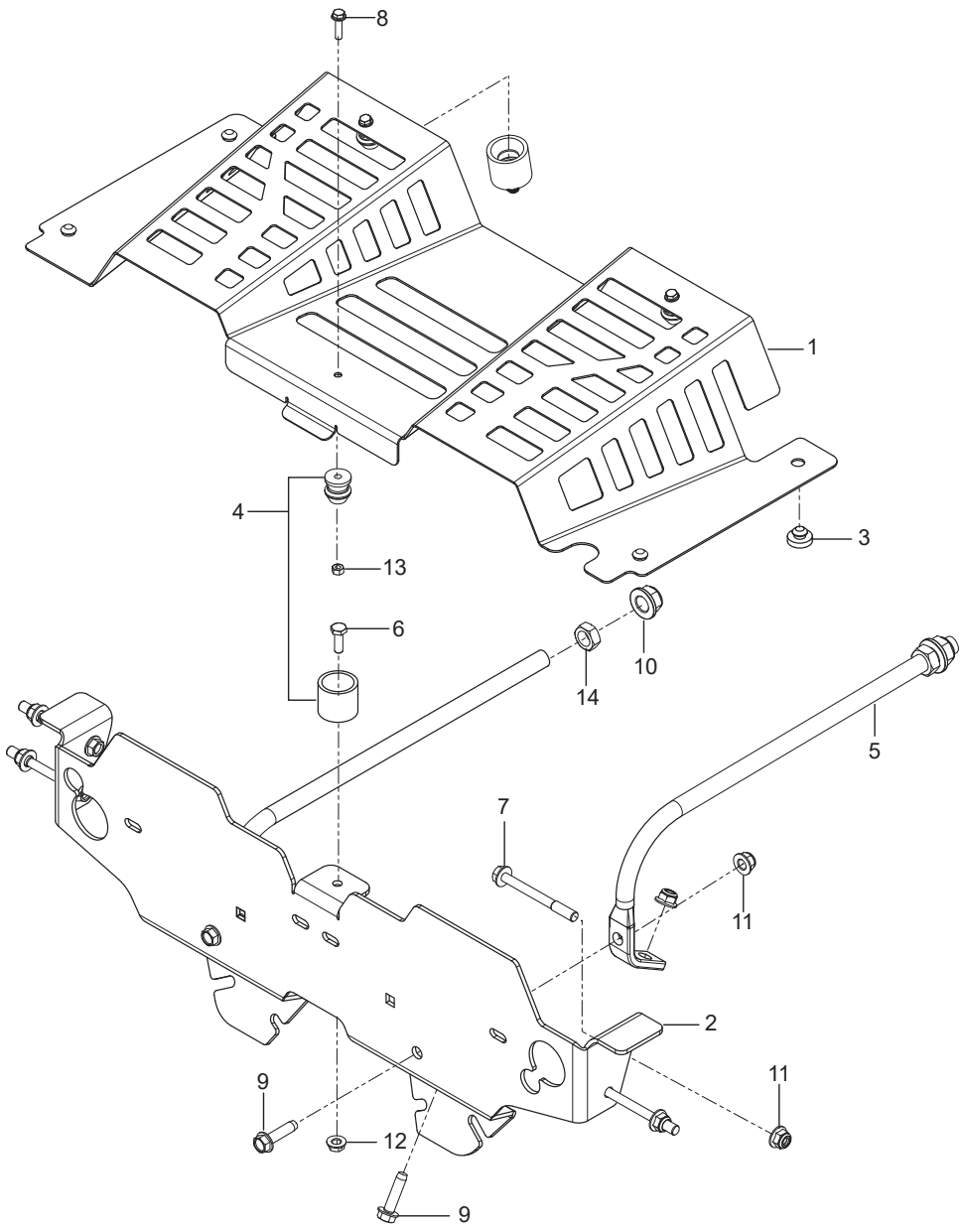

Ref.	Part No.	Qty	Description	Kit / Assy Includes
1	591 35 99-01	1	Shield, Fan w/ Safety Decal	
2	582 46 12-06	1	Bracket Org	
3	539 10 25-87	4	Grommet, Bumper	
4	582 46 17-01	3	Assy Holder	
5	582 46 13-03	2	Rod	
6	874 78 04-12	3	Bolt 1/4-20 x 3/4 Hex Hd	
7	874 49 05-48	4	Bolt 5/16-18 x 3 Hex Flange Hd	
8	503 20 00-01	3	Screw M5 x 20/20 10 9	
9	587 59 21-01	4	Screw 5/16-18 x 1-1/4 Thread roll	
10	521 99 11-01	2	Nut 1/2-13 Hex Flange Nyloc	
11	539 11 28-99	8	Nut 5/16-18 Hex Flange Nyloc	
12	532 19 17-30	3	Nut 1/4-20 Hex Flange Center Lock	
13	731 23 14-05	3	Nut-M5 x 8 Hex	
14	873 35 08-00	2	Nut 1/2-13 Jam Hex	